US00D958542S

(12) United States Design Patent

Zhou

(10) Patent No.: US D958,542 S
(45) Date of Patent: ** Jul. 26, 2022

(54) **BRUSH HEAD FOR ELECTRIC TOOTHBRUSH**

(71) Applicant: **JS Holding Inc.**, Dover, DE (US)

(72) Inventor: **Xin Zhou**, Irvine, CA (US)

(73) Assignee: **JS Holding Inc.**, Dover, DE (US)

(**) Term: **15 Years**

(21) Appl. No.: **29/743,207**

(22) Filed: **Jul. 20, 2020**

(51) **LOC (13) Cl.** **04-02**

(52) **U.S. Cl.**
USPC **D4/101**

(58) **Field of Classification Search**
USPC D4/100–138, 199; D24/176, 181
CPC A46B 2200/1066; A46B 2200/1073; A46B 2200/1086; A46B 5/0095; A46B 13/023; A46B 9/04; A61C 17/16; A61C 17/222
See application file for complete search history.

(56) **References Cited**

U.S. PATENT DOCUMENTS

D653,035	S *	1/2012	Gebski	D4/101
D657,565	S *	4/2012	Gebski	D4/101
D747,609	S *	1/2016	Watkins	D4/101
D891,116	S *	7/2020	Feng	D4/101
D919,301	S *	5/2021	Zhao	D4/101
11,071,613	B1 *	7/2021	Zhou	A61C 17/222
D933,962	S *	10/2021	He	D4/101
D933,963	S *	10/2021	He	D4/101
D933,964	S *	10/2021	He	D4/101
D933,965	S *	10/2021	Tang	D4/101
D935,187	S *	11/2021	Hu	D4/101
D939,216	S *	12/2021	Liu	D4/111

FOREIGN PATENT DOCUMENTS

CN 307014176 * 12/2021

OTHER PUBLICATIONS

Brushmo Replacement brush head, announced May 2017 [online], [site visited Jan. 31, 2022]. Available from internet, URL: https://www.amazon.com/Sonimart-Replacement-Toothbrush-DiamondClean-HealthyWhite/dp/B07KZ6HDXJ (Year: 2017).*

Philips Sonic Care brush, announced Nov. 2017 [online], [site visited Jan. 31, 2022]. Available from internet, URL: https://www.amazon.com/Philips-Sonicare-replacement-toothbrush-HX9023/dp/B078BF27BF/ref=sr_1_5?keywords=toothbrush+head&qid=1643638786&s=beauty&sr=1-5 (Year: 2017).*

"Aoremon Replacement Toothbrush Heads for Philips Sonicare DiamondClean HX6064-8 Pack Replacement Heads Compatible with all Snap-On Sonicare Brush Head," https://www.amazon.com/Aoremon-Replacement-DiamondClean-HX6063-Healthy White, ASIN B07S9VHL6F, Amazon.com, pp. 1-10, Jun. 4, 2020.

Aoremon Replacement Brush Head for Philips Sonicare: 8 Pack Toothbrush, https://www.amazon.com/Aoremon-Diamondclean-Replacement-DiamondClean-Healthy, ASIN B07C2QJRRD, Amazon.com, pp. 1-8, Jun. 17, 2020.

"Replacement Brush Heads Compatible with Philips Sonicare Plaque Control HX9023/HX9024 (6 pack), 2 Series, 3 Series, FlexCare, HealthyWhite, DiamondClean Electric Toothbrush by Aoremon," <https://www.amazon.com/Replacement-Compatible-HealthyWhite-DiamondClean-Toothbrush>, ASIN B076Q8C7B8, Amazon.com, pp. 1-9, Jun. 4, 2020.

"Replacement Toothbrush Heads for Philips Sonicare: Compatible with Sonicare ProResults Electric Toothbrush HX9023, 8 Pack for Phillips Plaque Control, DiamondClean, FlexCare, HealthyWhite," https://www.amazon.con/Toptheway-Replacement-Toothbrush-Heads-DiamondClean/dp, ASIN B07MYR7X9Q, Amazon.com, pp. 1-9, Jun. 4, 2020.

"Toptheway Replacement Heads Compatible with Sonicare E-Series Toothbrush HX7022/66, Essence,Xtreme, Elite, Advance and CleanCare Screw-On Handle, 6 Pack," https://www.amazon.com/Toptheway-Replacement-Compatible-Toothbrush-CleanCare/dp/B078RFTG46, ASIN B078RFTG46, Amazon.com, pp. 1-9, Jun. 20, 2020.

"Toptheway Replacement Brush Heads Compatible with Philips Sonicare ProResults Electric Toothbrush HX9023, 10 Pack for Phillips Plaque Control, DiamondClean, FlexCare, HealthyWhite," https://www.amazon.com/Toptheway-Replacement-Compatible-DiamondClean-Healthy, ASIN B082NJH99R, Amazon.com, pp. 1-8, Jun. 4, 2020.

"Replacement Toothbrush Heads for Philip Sonicare: Compatible with Diamondclean Electric Toothbrush HX6063/64, for Phillips Plaque Control, Gum Health, FlexCare, HealthyWhite and Easy Clean, 8 Pack," <https://www.amazon.com/dp/B087CQY9RN>, Amazon.com, pp. 1-10, Jun. 4, 2020.

"Toptheway Replacement Brush Heads—Compatible with Philips Sonicare DiamondClean Electric Toothbrush, for Phillips Plaque Control, Gum Health, FlexCare, HealthyWhite, Black, 8 Pack,"



<https://www.amazon.com/Replacement-DiamondClean-Toothbrush-HealthyWhite-Topetheway>, ASIN B07JYZB558, Amazon.com, pp. 1-20, Jun. 4, 2020.
"Brush Heads Replacement Compatible with Phillips Sonicare Electric Toothbrush, 8 Pack," <https://www.amazon.com/Replacement-Compatible-Phillips-Sonicare-Toothbrush/dp>, ASIN B07W4HPTQW, Amazon.com, pp. 1-9, Jul. 2, 2020.
"Replacement Toothbrush Heads Compatible with Phillips Sonicare, 10 Pack," <https://www.amazon.com/Replacement-Toothbrush-Compatible-Philips-Sonicare/dp>, ASIN B0TQ3JGHXV, Amazon.com, pp. 1-9, Jun. 23, 2020.
"DiamondWhite Replacement Toothbrush Heads for Sonicare, Fits 2 Series, ProResults, FlexCare, Healthy White, Platinum, EasyClean, DiamondClean, Gum Health models (Black) (8-Pack)," <https://www.amazon.con/Cavifree-Sensitive-Replacement-Toothbrush-Heads/dp>, ASIN B07XP1KD4G, Amazon.com, pp. 1-9, Jun. 17, 2020.
"Replacement Brush Heads for Phillips Sonicare Electric Toothbrush, Replacement Toothbrush Heads Compatible with Sonicare HX6065, Plaque Control, HealthyWhite, Gum Health, FlexCare, 8 Pack," <https://www.amazon.com/gp/product/B07HMQBC6D/ref=ppx_yo_dt_b_search_asin_title>, Amazon.com, pp. 1-8, Jun. 18, 2020.
Information about Related Patents and Patent Applications, see section 6 of the accompanying Information Disclosure Statement Letter, which concerns Related Patents and Patent Applications.
U.S. Appl. No. 29/743,210, filed Jul. 20, 2020, Brush Head for Electric Toothbrush.

* cited by examiner

Primary Examiner — Cynthia Ramirez
Assistant Examiner — Tamara L Hahn
(74) *Attorney, Agent, or Firm* — Fox Rothschild LLP

(57) **CLAIM**

The ornamental design for a brush head for electric toothbrush, as shown and described.

DESCRIPTION

The patent or application file contains at least one drawing executed in color. Copies of this patent or patent application publication with color drawing(s) will be provided by the Office upon request and payment of the necessary fee.
FIG. **1** illustrates a perspective view of a first embodiment of a brush head for electric toothbrush.
FIG. **2** illustrates a first side of the first embodiment of the brush head.
FIG. **3** illustrates a second side of the first embodiment of the brush head.
FIG. **4** illustrates a third side of the first embodiment of the brush head.
FIG. **5** illustrates a fourth side of the first embodiment of the brush head.
FIG. **6** is a top view of the first embodiment of the brush head.
FIG. **7** is a bottom view of the first embodiment of the brush head.
FIG. **8** illustrates a perspective view of a second embodiment of a brush head for electric toothbrush, the stippling shading applied to some of the bristles show contrast in appearance.
FIG. **9** illustrates a first side of the second embodiment of the brush head.
FIG. **10** illustrates a second side of the second embodiment of the brush head.
FIG. **11** illustrates a third side of the second embodiment of the brush head.
FIG. **12** illustrates a fourth side of the second embodiment of the brush head.
FIG. **13** is a top view of the second embodiment of the brush head.
FIG. **14** is a bottom view of the second embodiment of the brush head.
FIG. **15** illustrates a perspective view of a third embodiment of a brush head for electric toothbrush. A variation in color combination in the bristles is shown.
FIG. **16** illustrates a first side of the third embodiment of the brush head.
FIG. **17** illustrates a second side of the third embodiment of the brush head.
FIG. **18** illustrates a third side of the third embodiment of the brush head.
FIG. **19** illustrates a fourth side of the third embodiment of the brush head.
FIG. **20** is a top view of the third embodiment of the brush head.
FIG. **21** is a bottom view of the third embodiment of the brush head.
FIG. **22** illustrates a perspective view of a fourth embodiment of a brush head for electric toothbrush, the stippling shading applied to some of the bristles show contrast in appearance.
FIG. **23** illustrates a first side of the fourth embodiment of the brush head.
FIG. **24** illustrates a second side of the fourth embodiment of the brush head.
FIG. **25** illustrates a third side of the fourth embodiment of the brush head.
FIG. **26** illustrates a fourth side of the fourth embodiment of the brush head.
FIG. **27** is a top view of the fourth embodiment of the brush head.
FIG. **28** is a bottom view of the fourth embodiment of the brush head.
FIG. **29** illustrates a perspective view of a fifth embodiment of a brush head for electric toothbrush. A variation in color combination in the bristles is shown.
FIG. **30** illustrates a first side of the fifth embodiment of the brush head.
FIG. **31** illustrates a second side of the fifth embodiment of the brush head.
FIG. **32** illustrates a third side of the fifth embodiment of the brush head.
FIG. **33** illustrates a fourth side of the fifth embodiment of the brush head.
FIG. **34** is a top view of the fifth embodiment of the brush head.
FIG. **35** is a bottom view of the fifth embodiment of the brush head.
FIG. **36** illustrates a perspective view of a sixth embodiment of a brush head for electric toothbrush, the stippling shading applied to some of the bristles show contrast in appearance.
FIG. **37** illustrates a first side of the sixth embodiment of the brush head.
FIG. **38** illustrates a second side of the sixth embodiment of the brush head.
FIG. **39** illustrates a third side of the sixth embodiment of the brush head.
FIG. **40** illustrates a fourth side of the sixth embodiment of the brush head.

FIG. **41** is a top view of the sixth embodiment of the brush head.

FIG. **42** is a bottom view of the sixth embodiment of the brush head.

FIG. **43** illustrates a perspective view of a seventh embodiment of a brush head for electric toothbrush. A variation in color combination in the bristles is shown.

FIG. **44** illustrates a first side of the seventh embodiment of the brush head.

FIG. **45** illustrates a second side of the seventh embodiment of the brush head.

FIG. **46** illustrates a third side of the seventh embodiment of the brush head.

FIG. **47** illustrates a fourth side of the seventh embodiment of the brush head.

FIG. **48** is a top view of the seventh embodiment of the brush head; and,

FIG. **49** is a bottom view of the seventh embodiment of the brush head.

The broken lines in the drawings depict portions of the brush head for electric toothbrush which form no part of the claimed design.

1 Claim, 42 Drawing Sheets
(15 of 42 Drawing Sheet(s) Filed in Color)

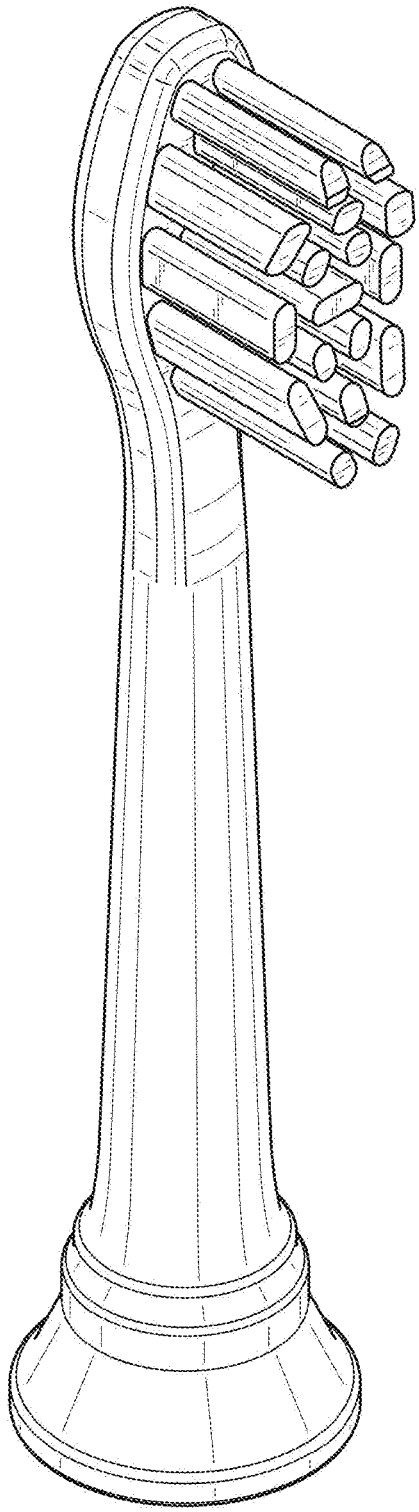

FIG. 1

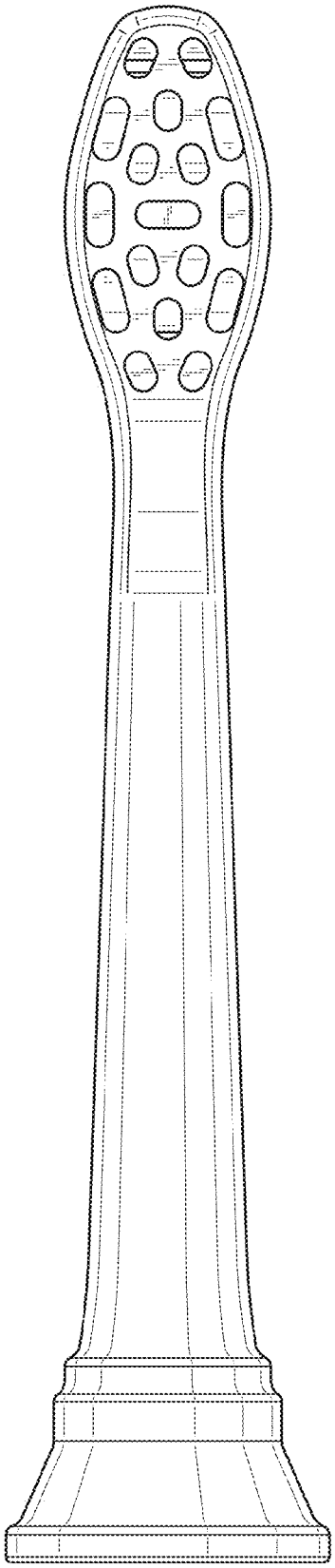

FIG. 2

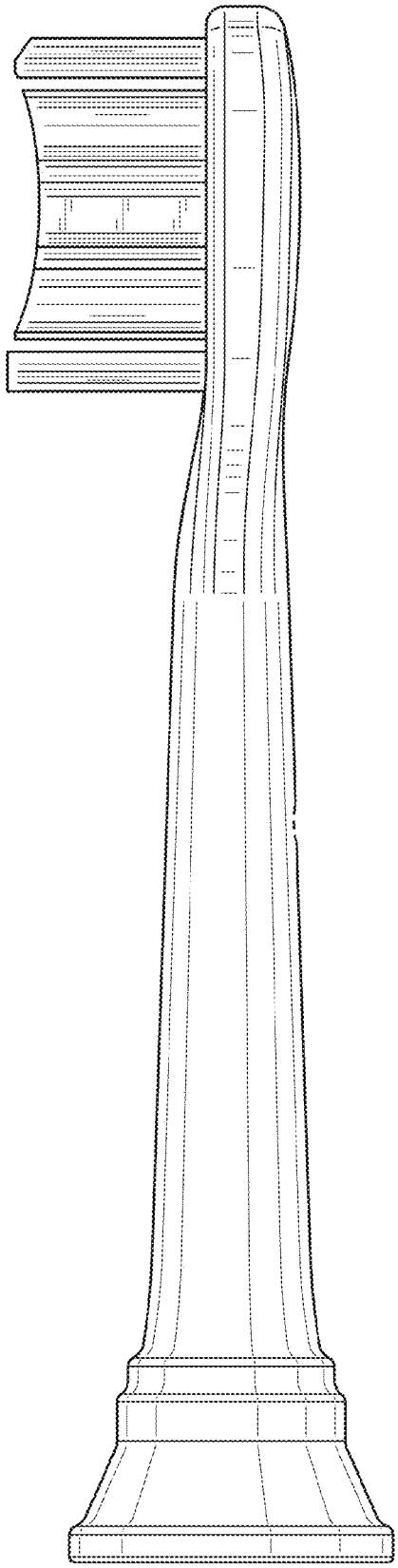

FIG. 3

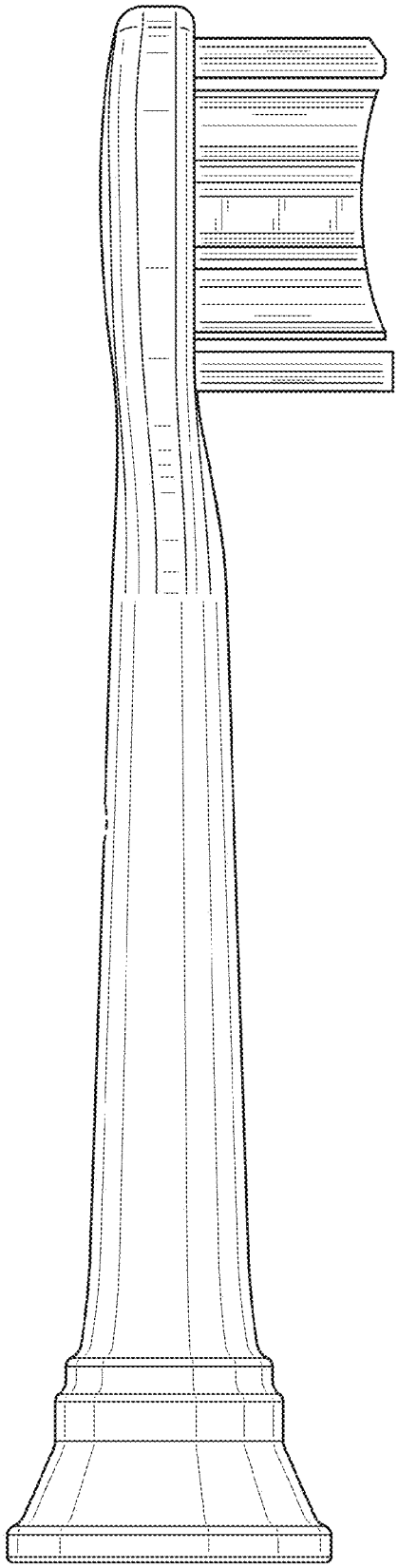

FIG. 4

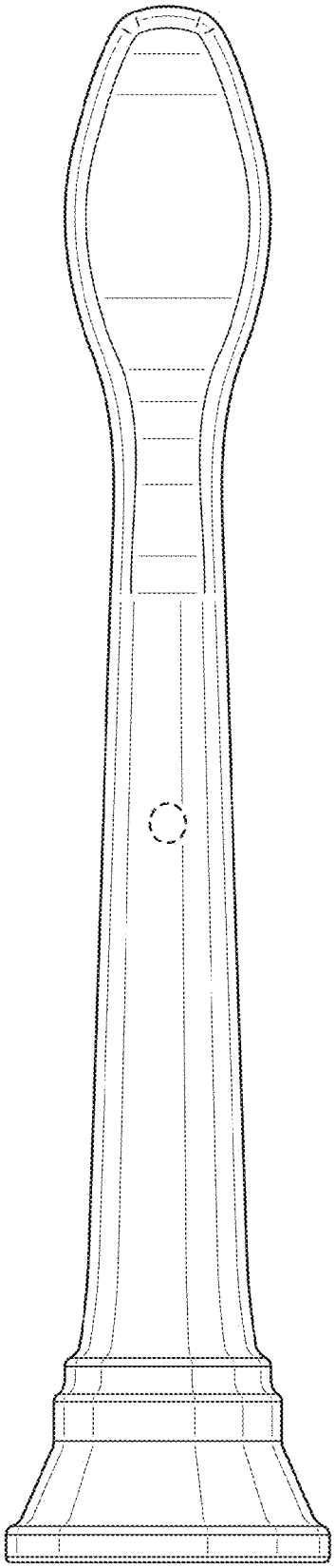

FIG. 5

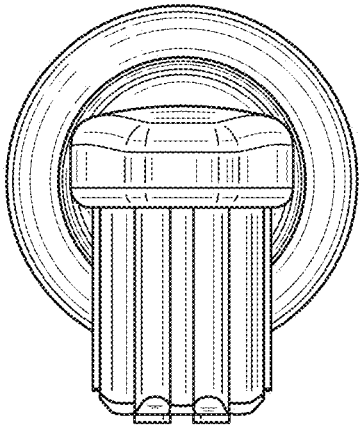

FIG. 6

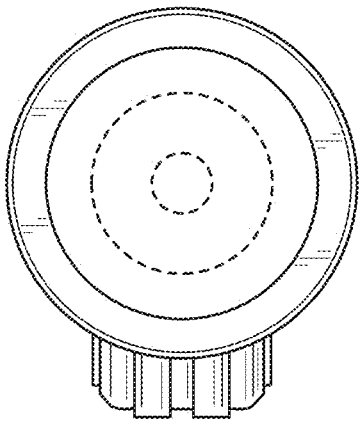

FIG. 7

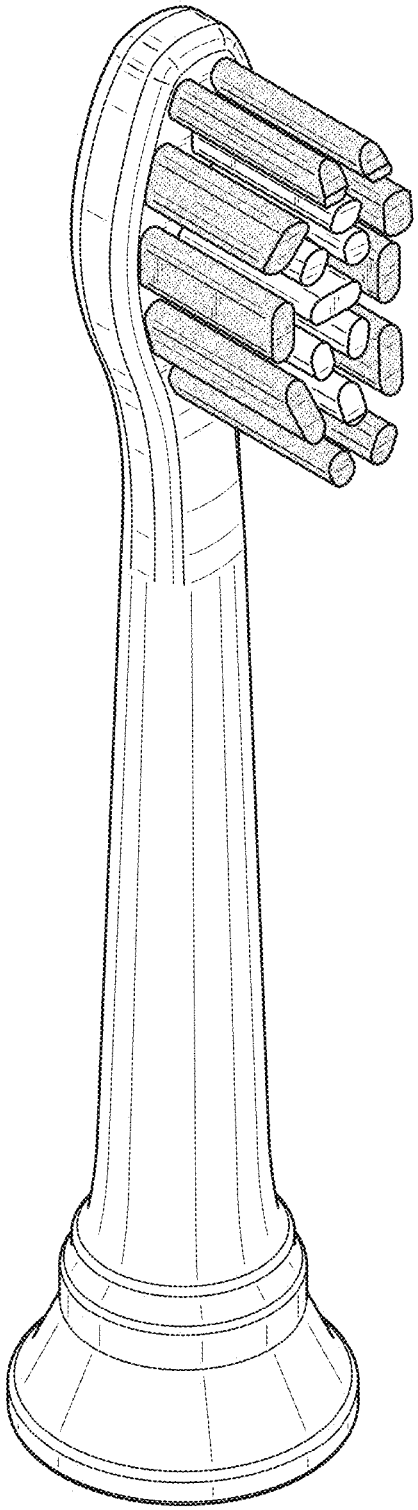

FIG. 8

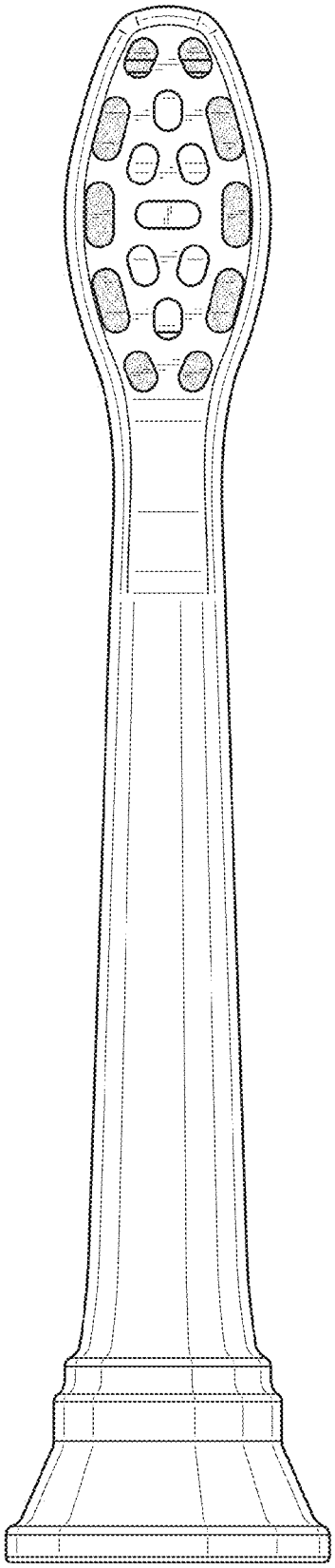

FIG. 9

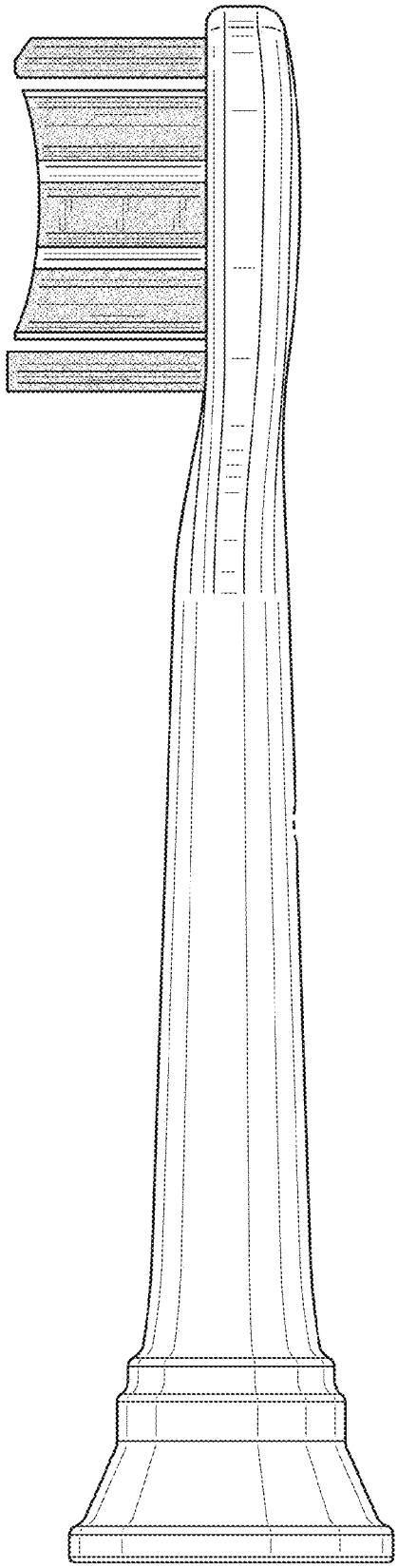

FIG. 10

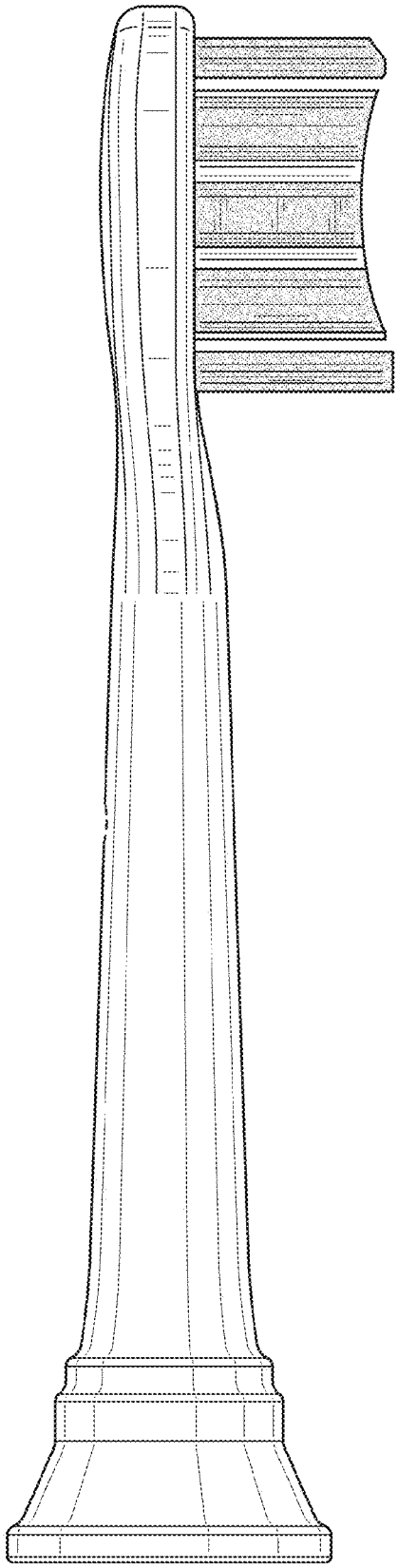

FIG. 11

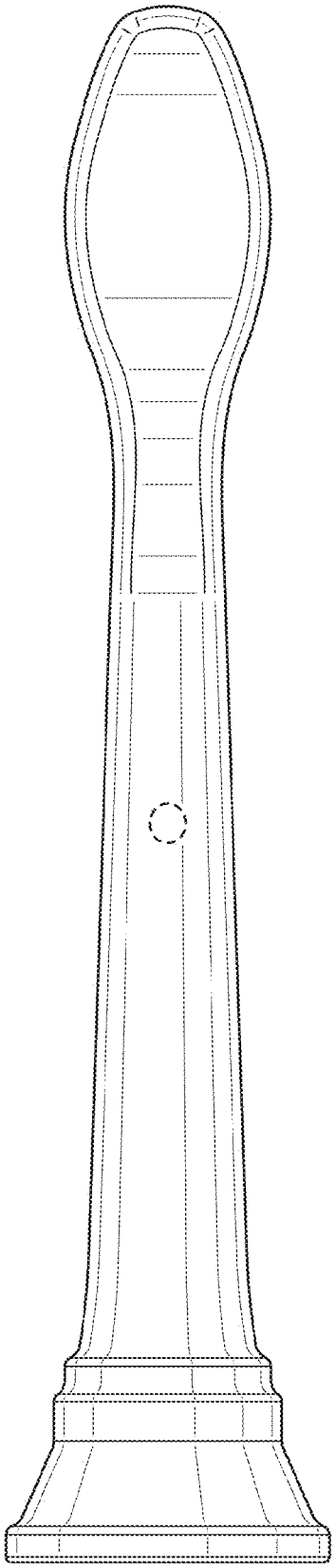

FIG. 12

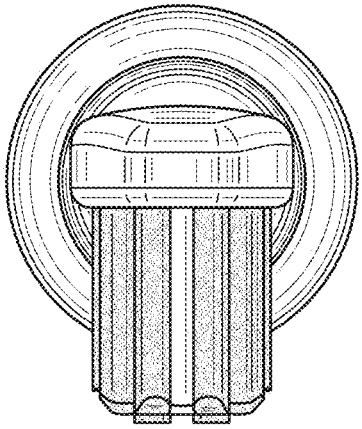

FIG. 13

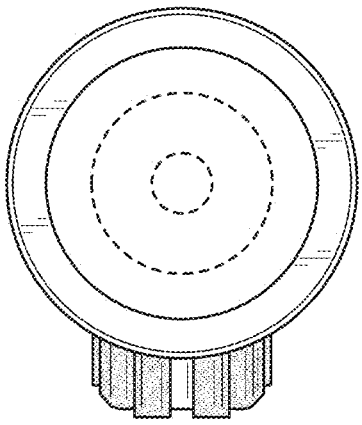

FIG. 14

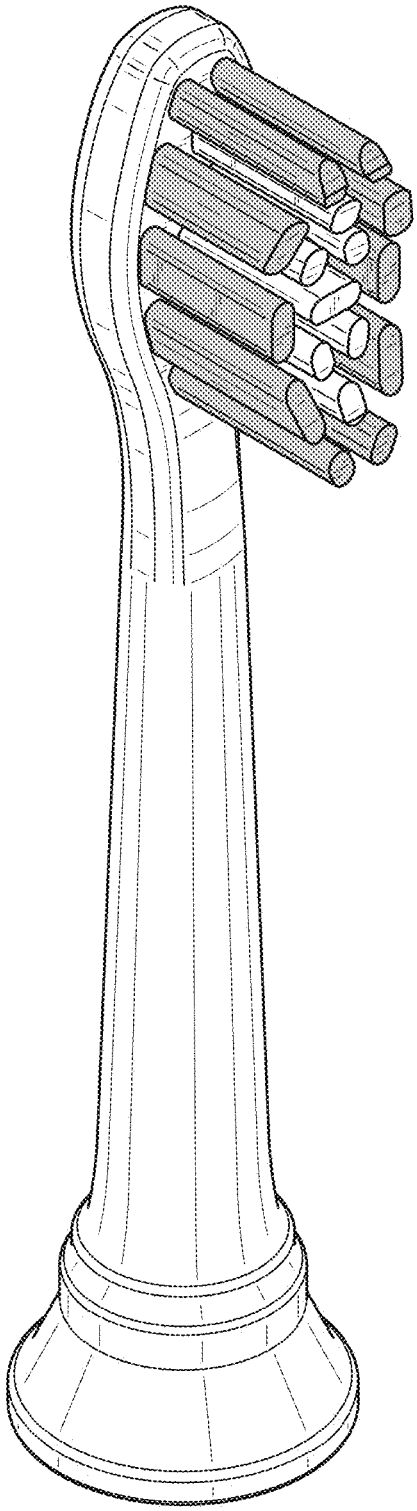

FIG. 15

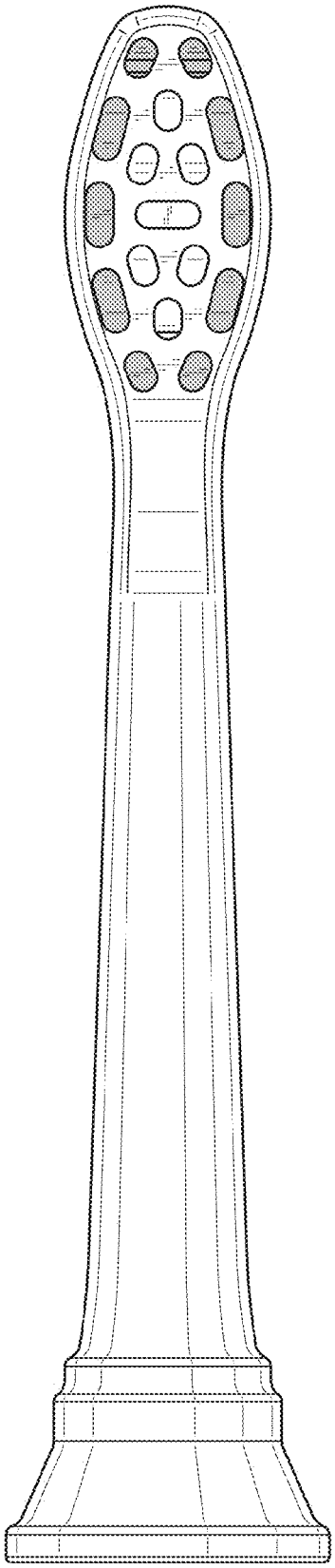

FIG. 16

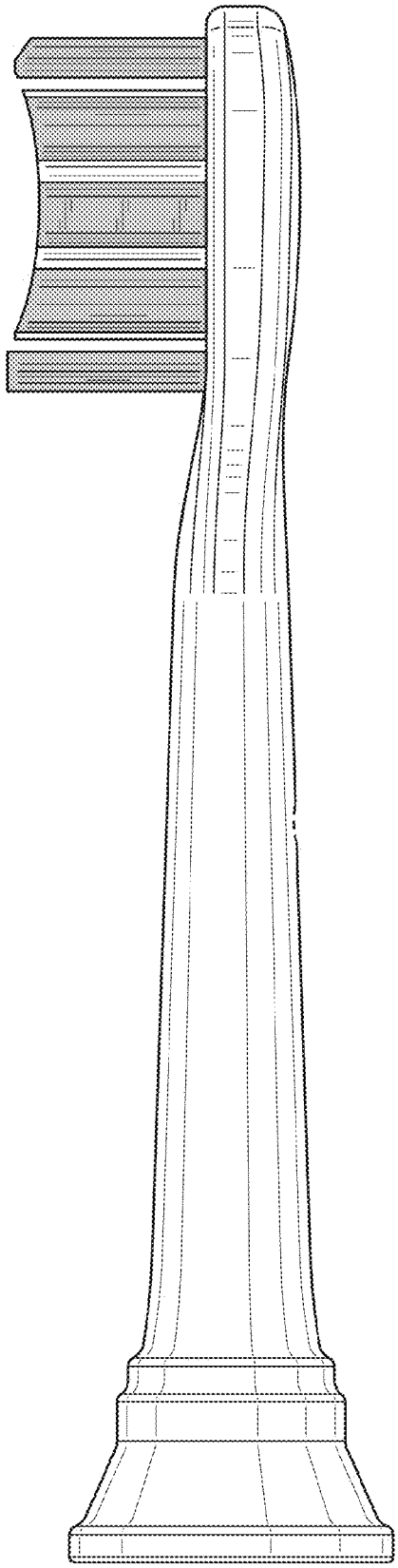

FIG. 17

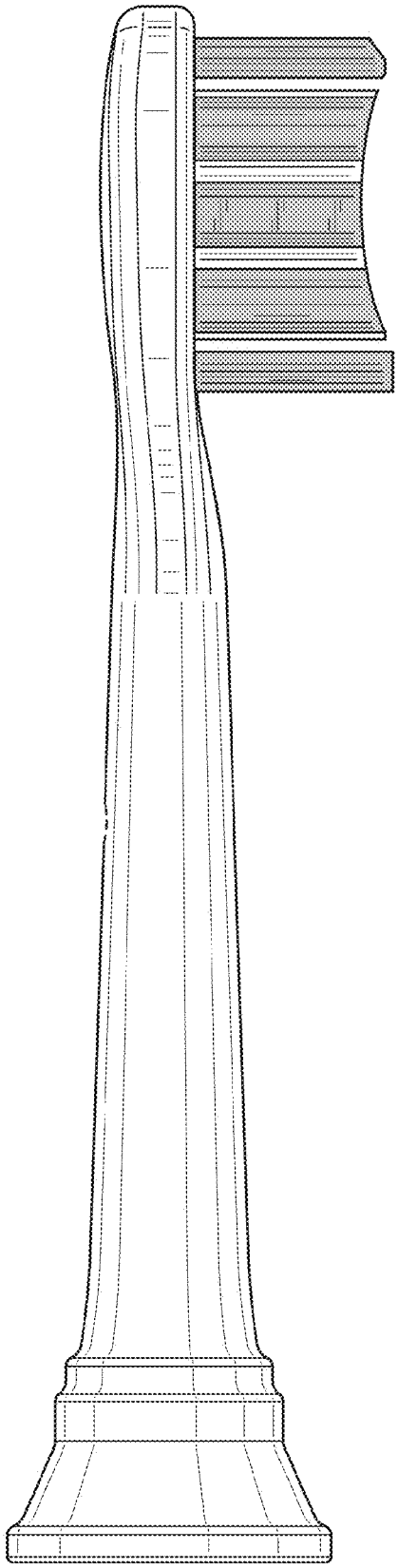

FIG. 18

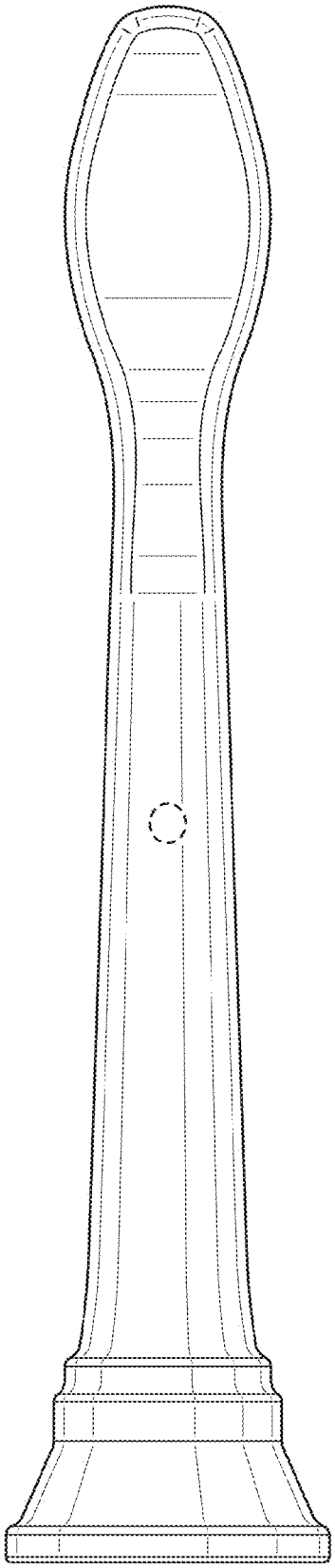

FIG. 19

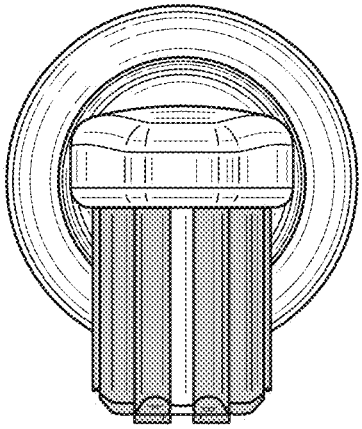

FIG. 20

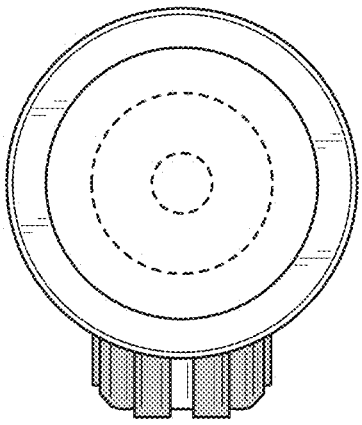

FIG. 21

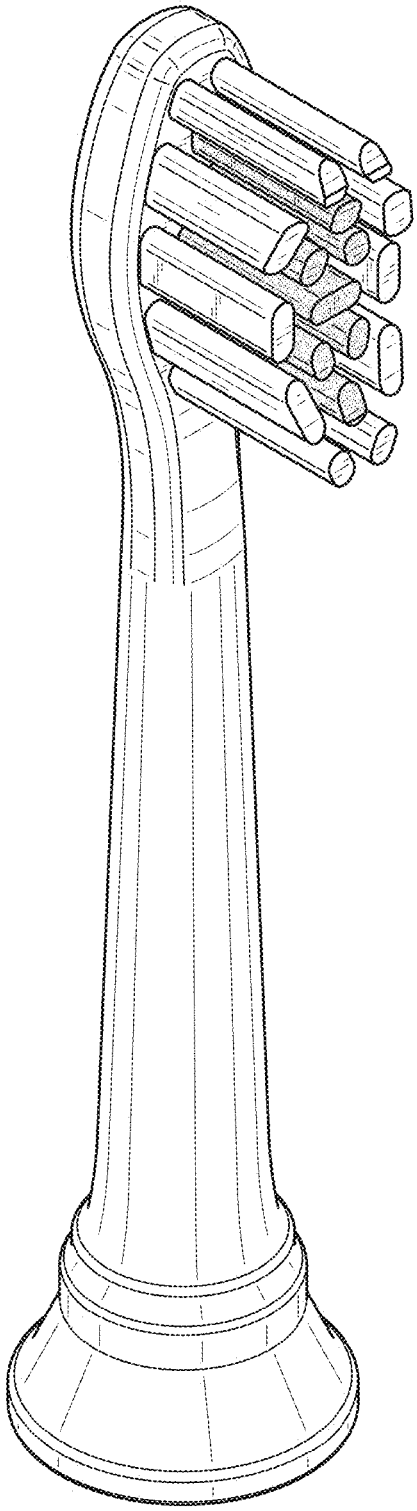

FIG. 22

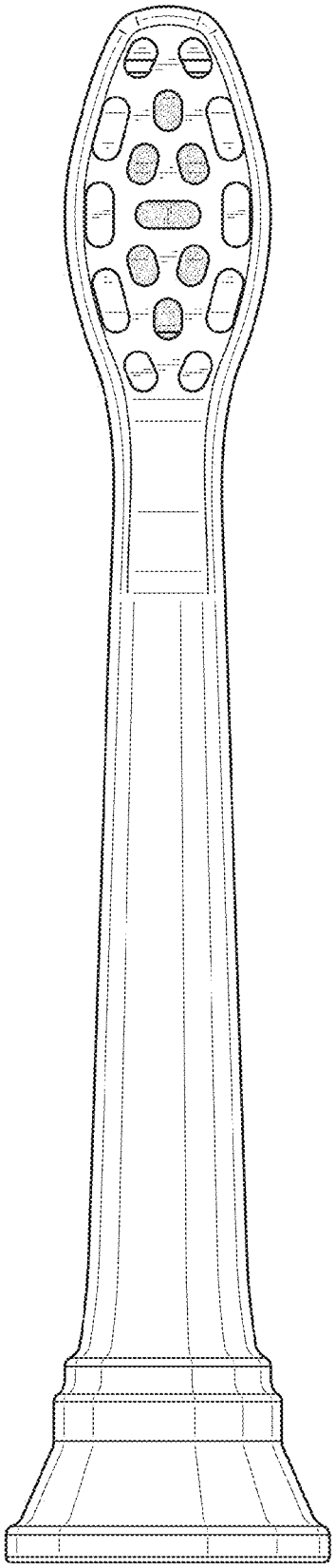

FIG. 23

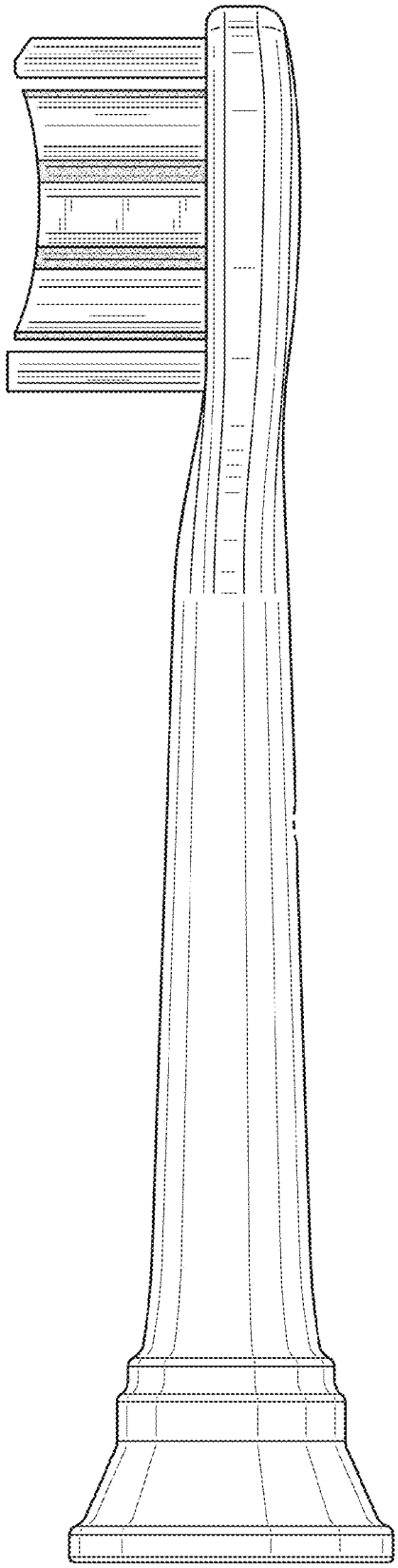

FIG. 24

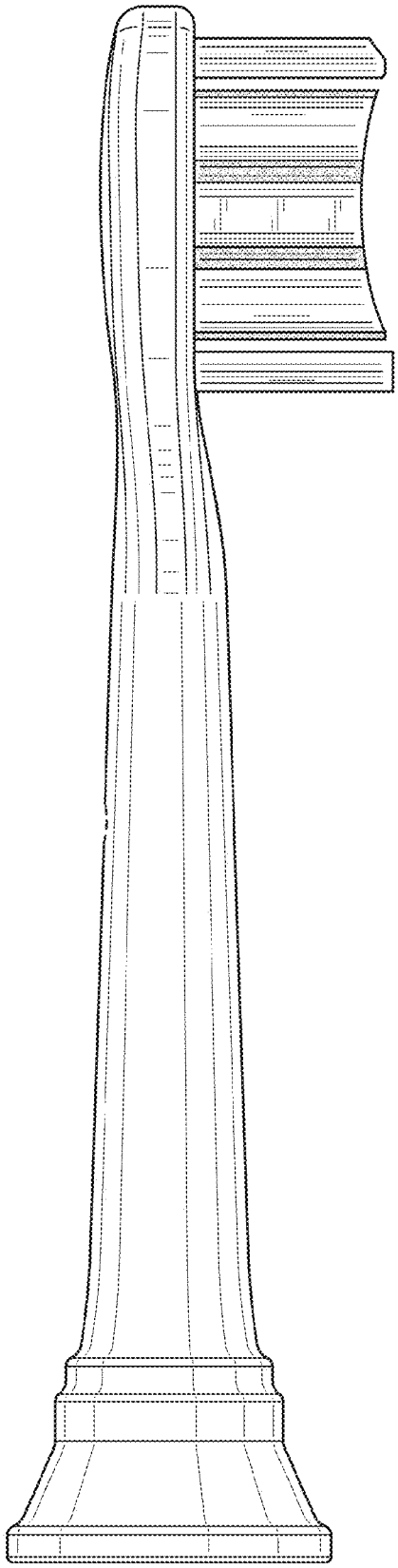

FIG. 25

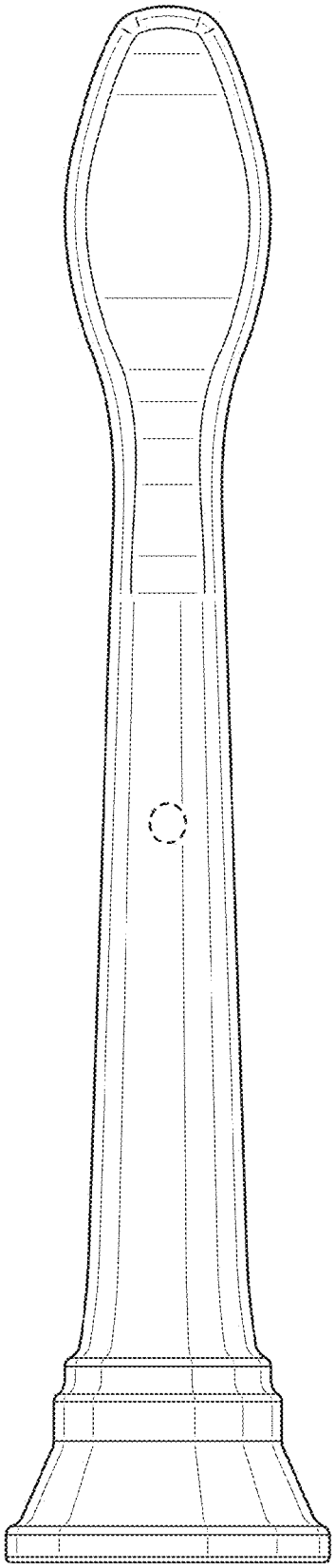

FIG. 26

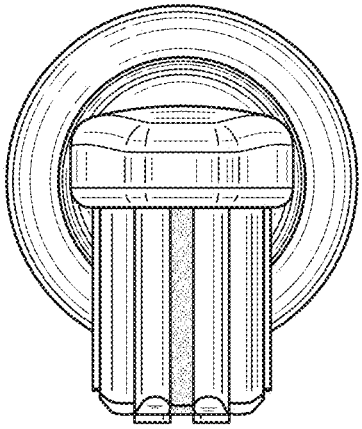

FIG. 27

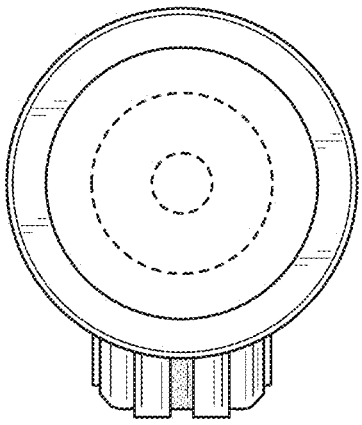

FIG. 28

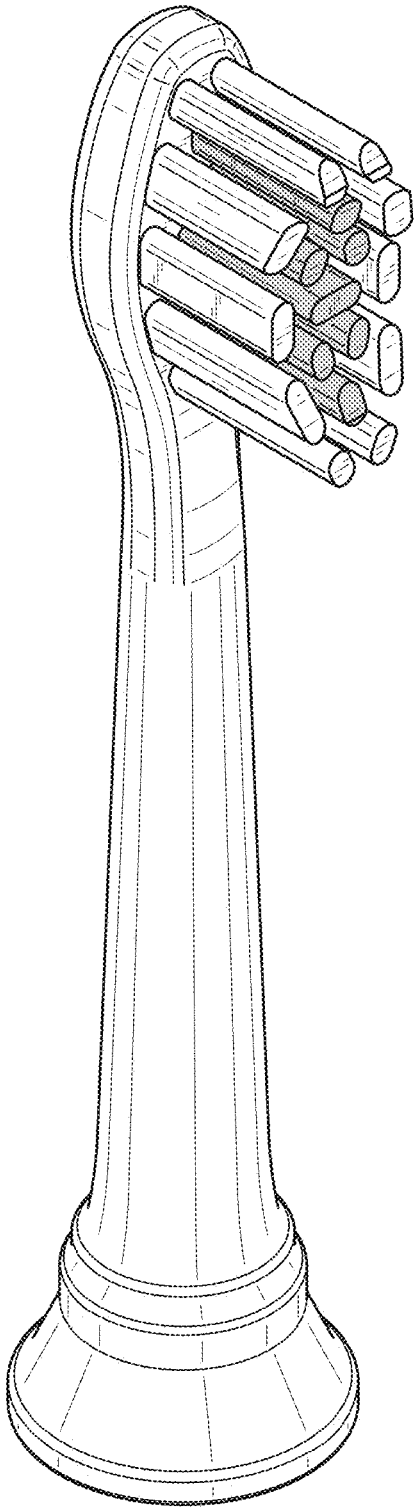

FIG. 29

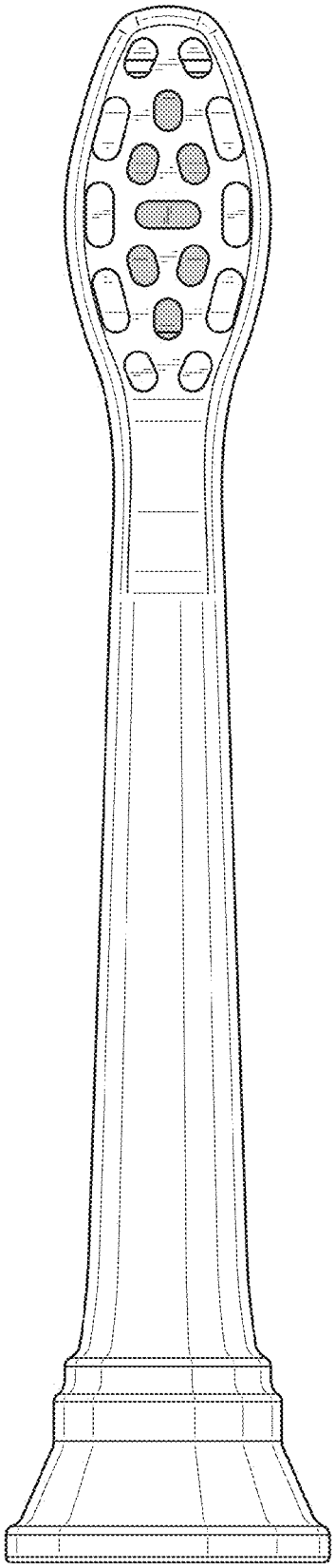

FIG. 30

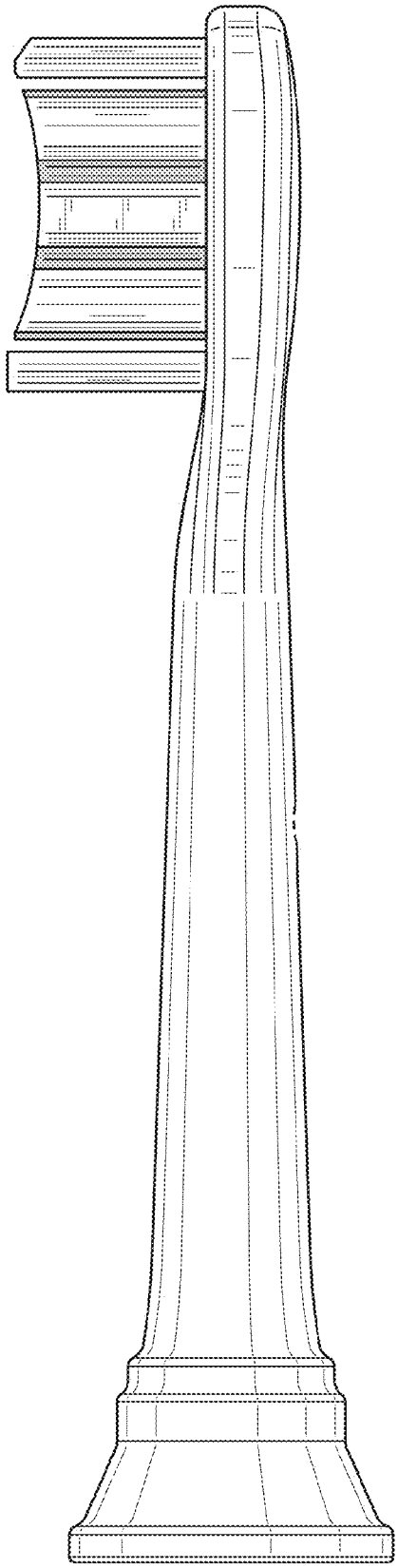

FIG. 31

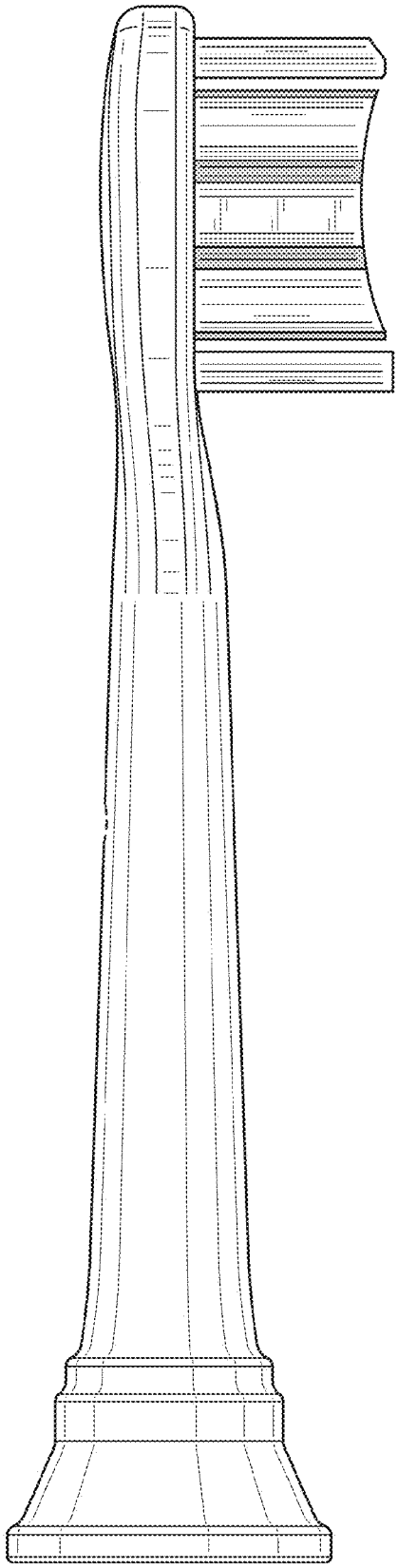

FIG. 32

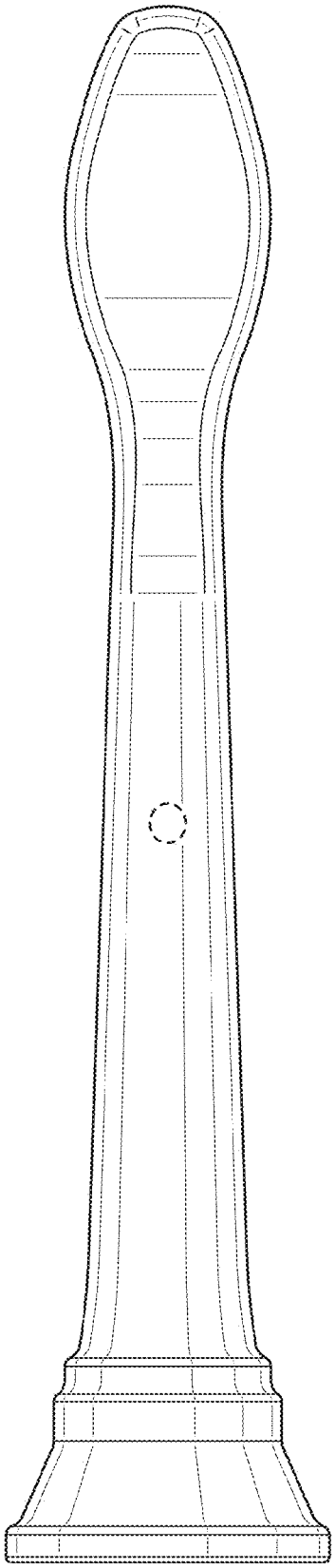

FIG. 33

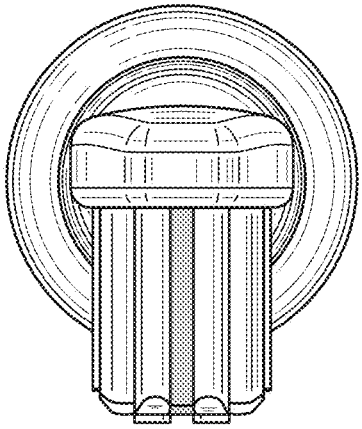

FIG. 34

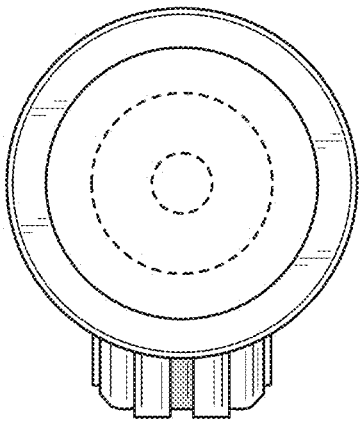

FIG. 35

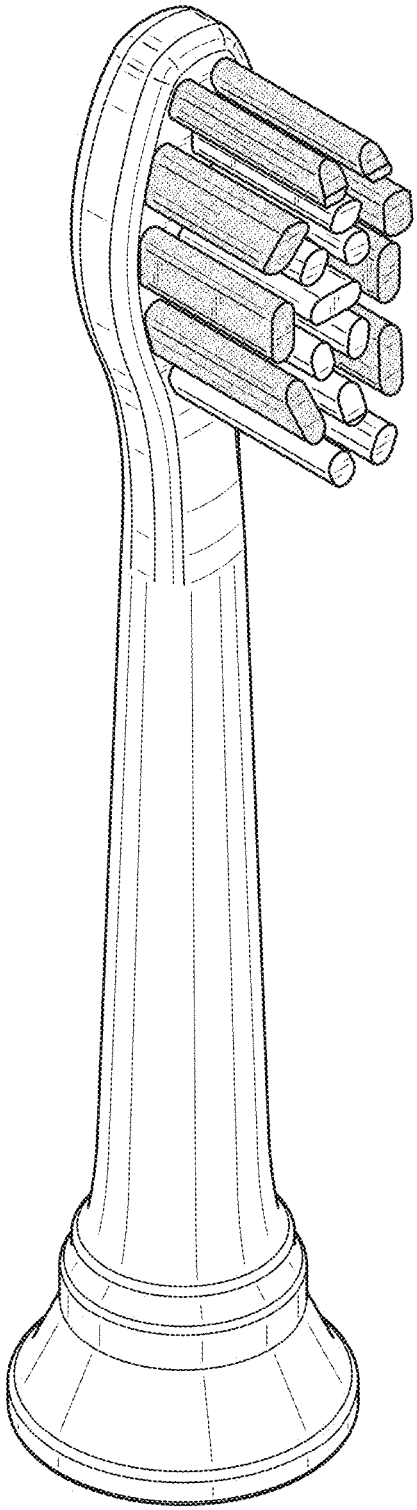

FIG. 36

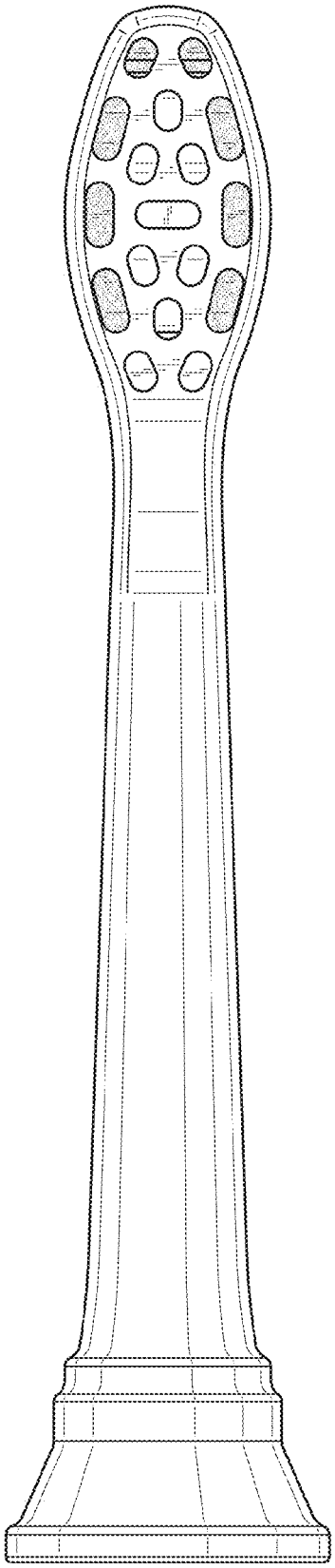

FIG. 37

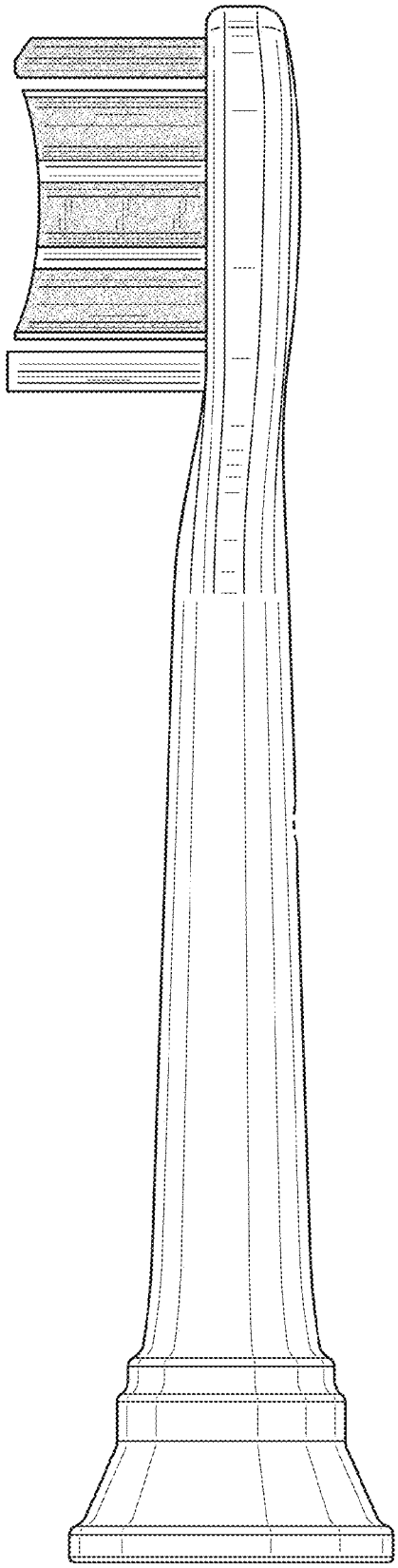

FIG. 38

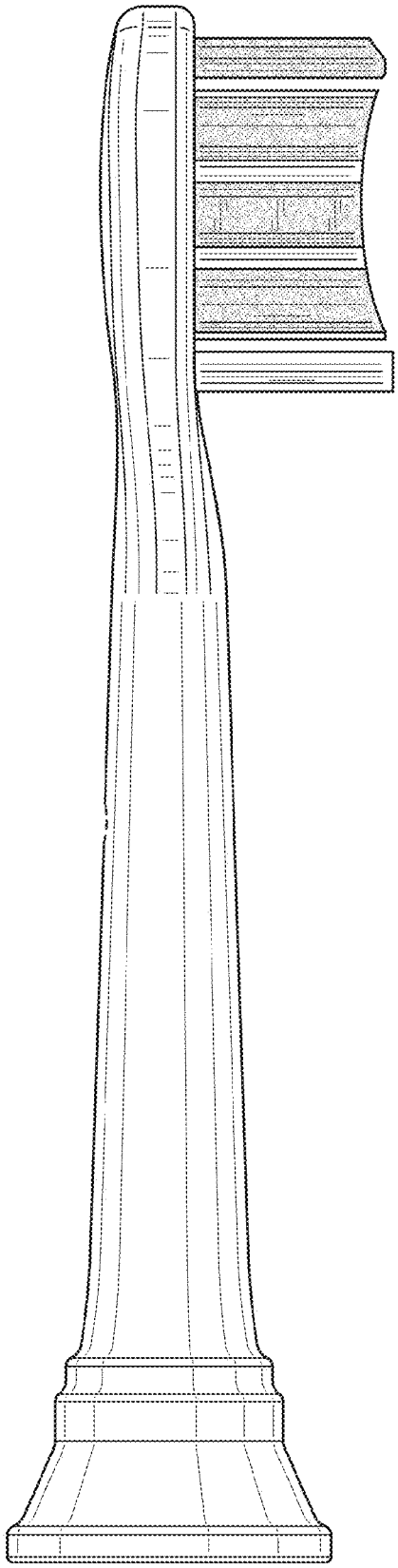

FIG. 39

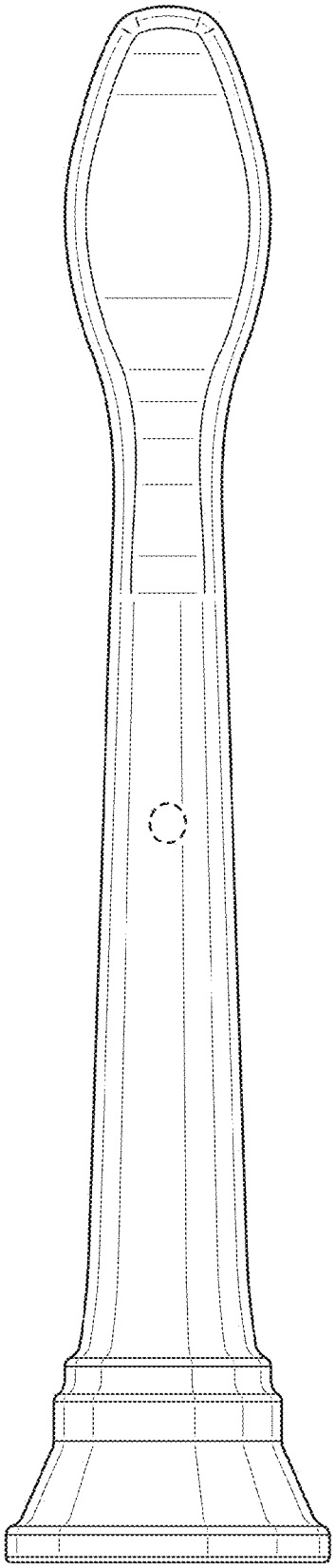

FIG. 40

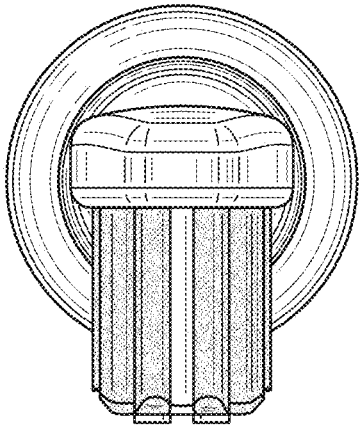

FIG. 41

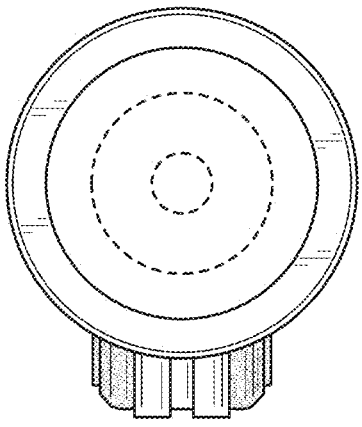

FIG. 42

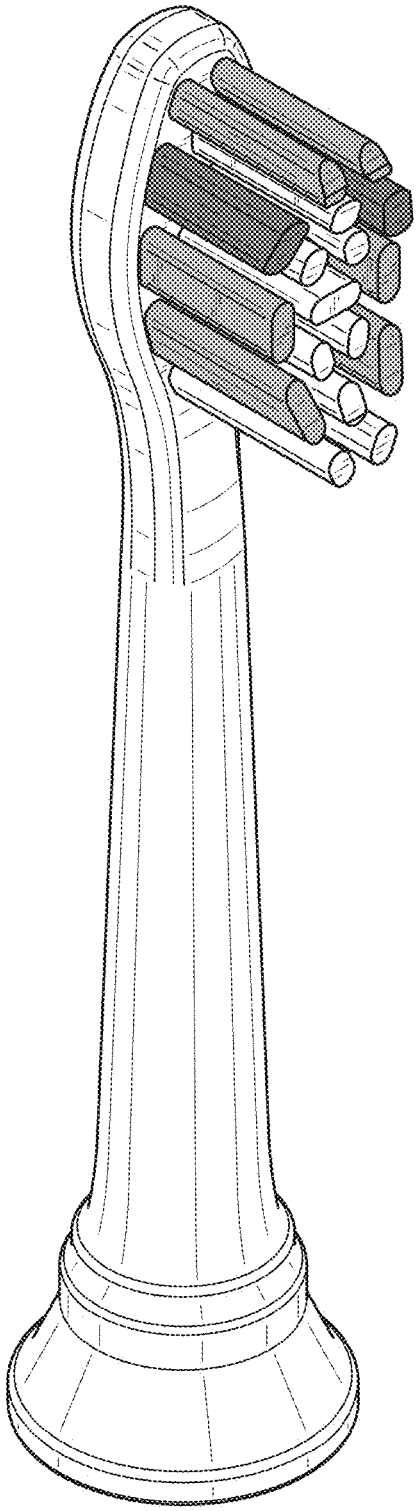

FIG. 43

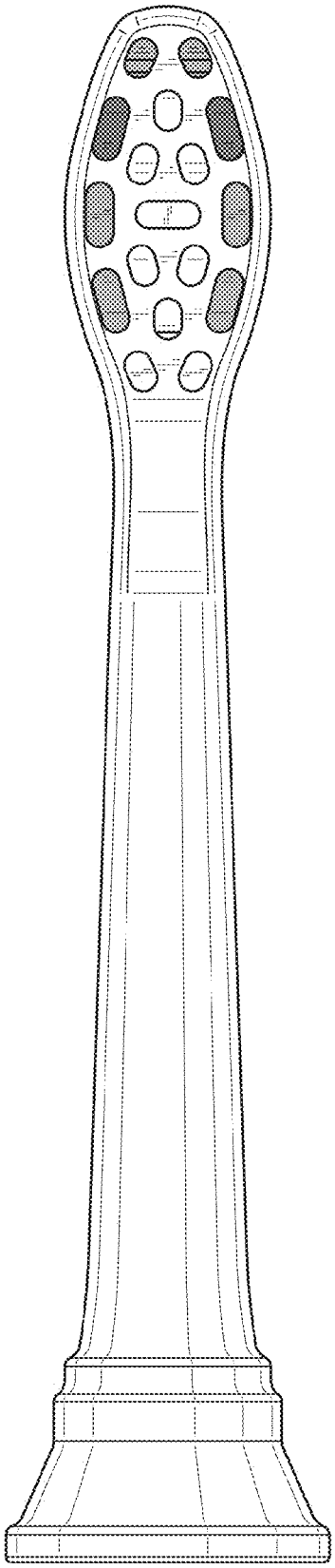

FIG. 44

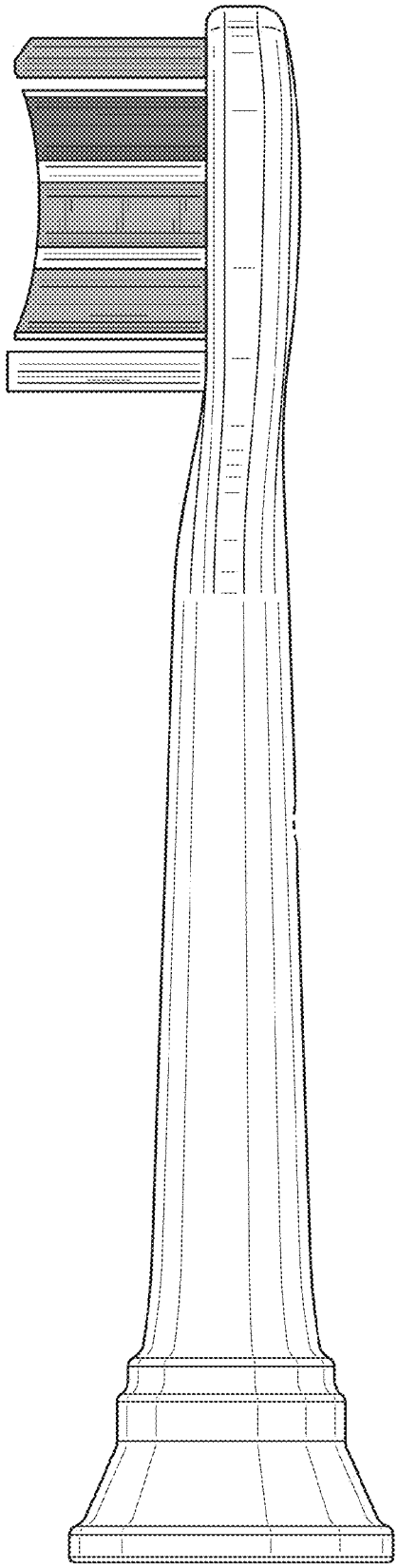

FIG. 45

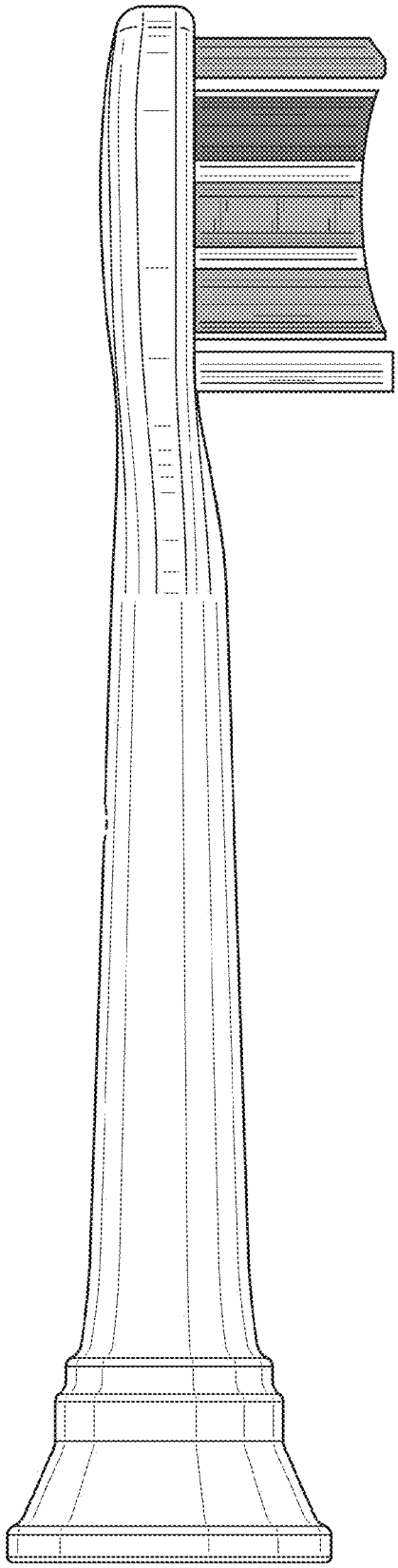

FIG. 46

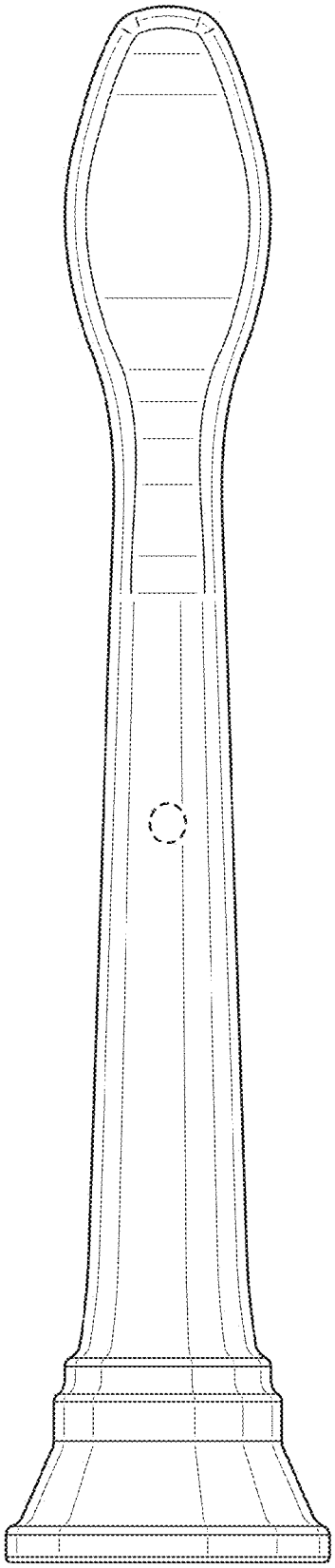

FIG. 47

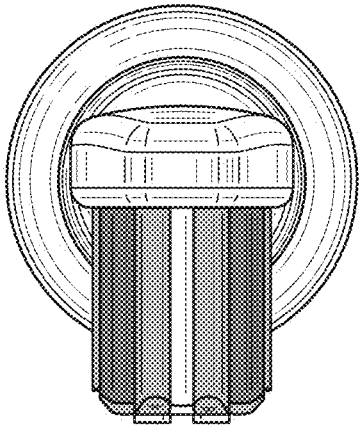

FIG. 48

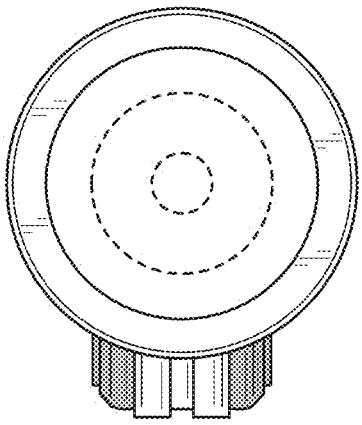

FIG. 49