Dec. 27, 1932. P. BETZLER 1,892,605

WALL CONSTRUCTION

Filed Oct. 20, 1931 3 Sheets-Sheet 1

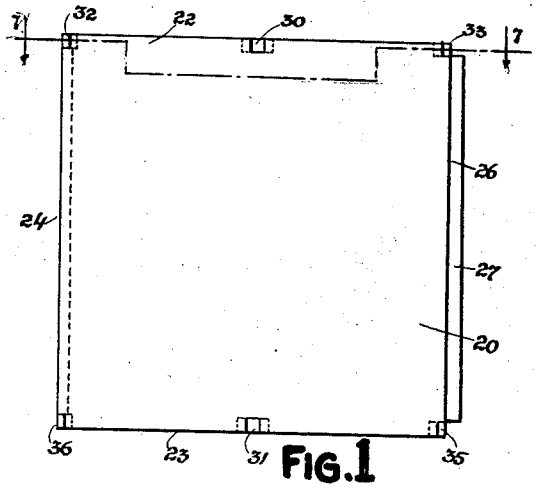

FIG. 1



FIG. 3



FIG. 4

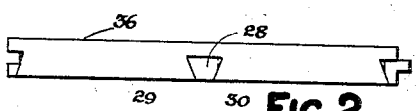

FIG. 2

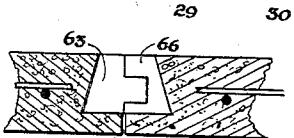

FIG. 16

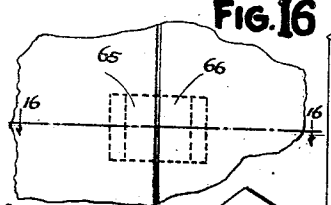

FIG. 15

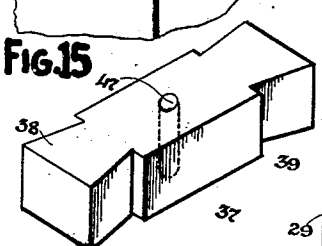

FIG. 5

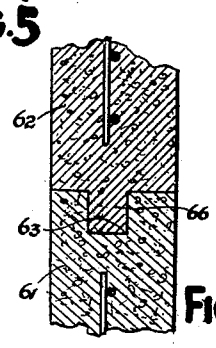

FIG. 14

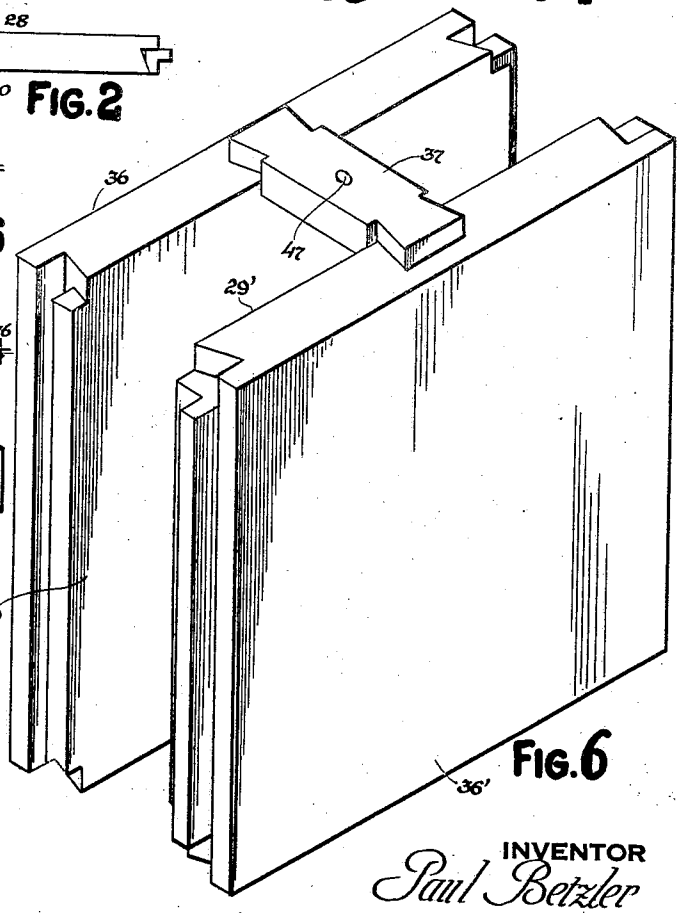

FIG. 6

INVENTOR
Paul Betzler

BY his ATTORNEY
Guido M. Sacerdote

Dec. 27, 1932. P. BETZLER 1,892,605

WALL CONSTRUCTION

Filed Oct. 20, 1931 3 Sheets-Sheet 2

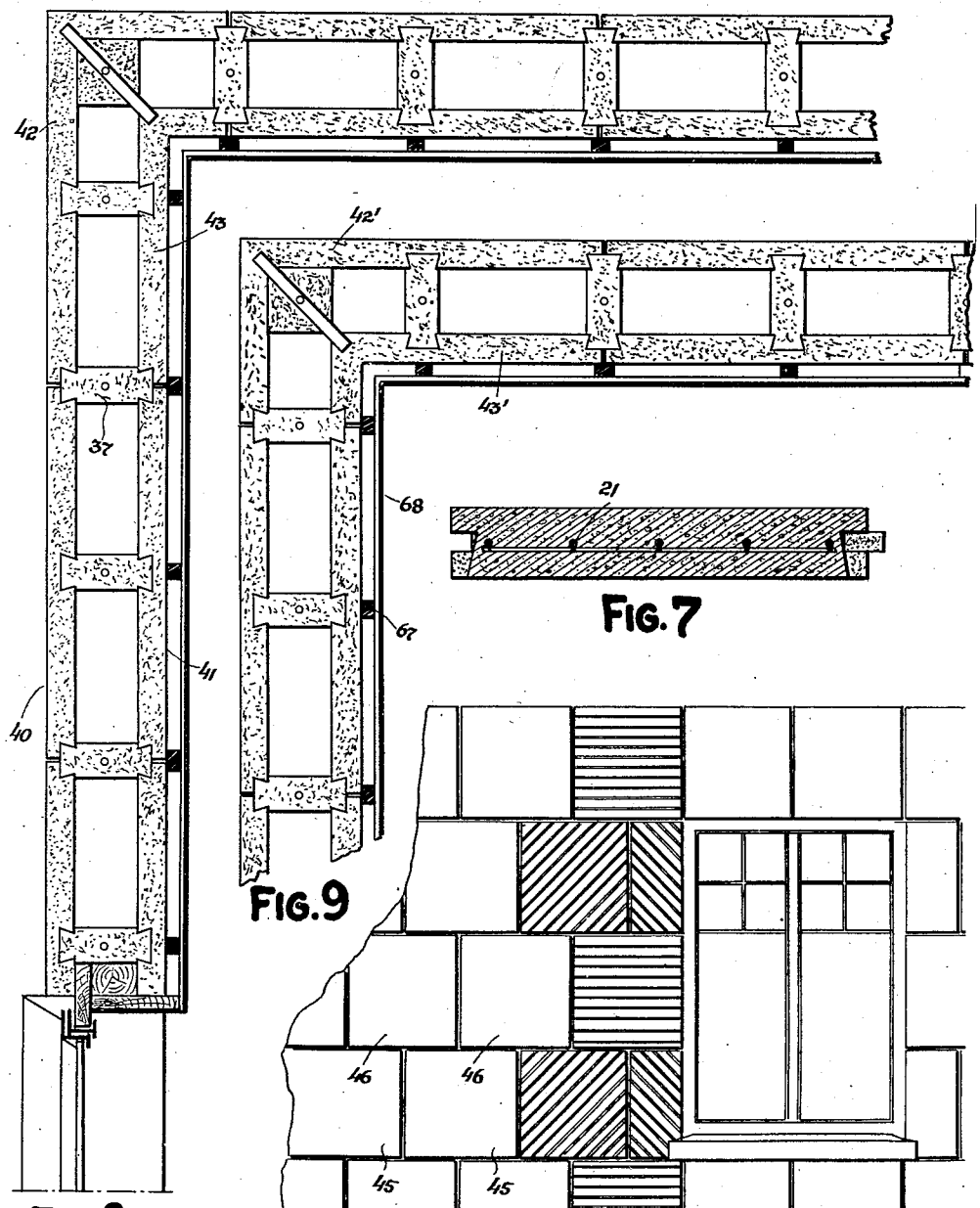

FIG. 7

FIG. 8

FIG. 9

FIG. 10

INVENTOR

Paul Betzler

BY his ATTORNEY

Guido M. Sacerdote

Dec. 27, 1932. P. BETZLER 1,892,605

WALL CONSTRUCTION

Filed Oct. 20, 1931 3 Sheets-Sheet 3

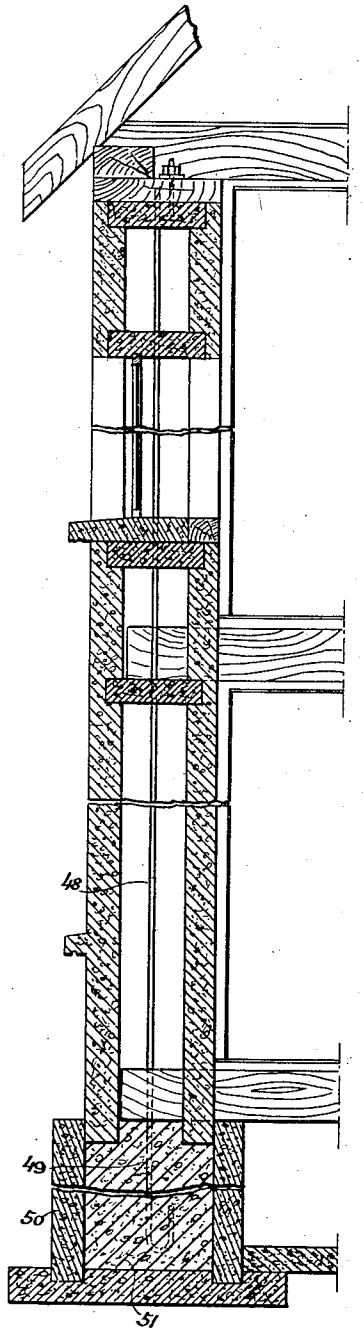

FIG. 11

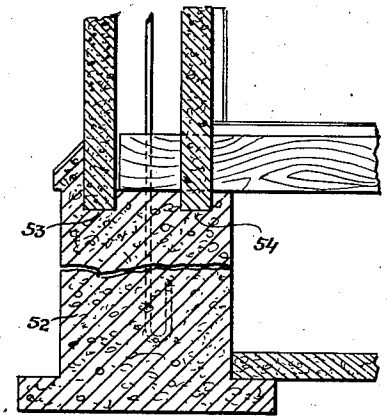

FIG. 12

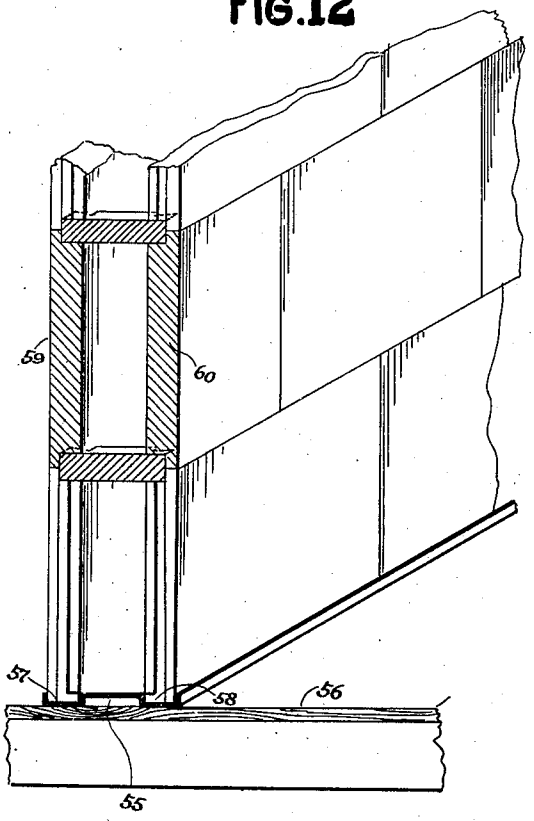

FIG. 13

INVENTOR

Paul Betzler

BY his ATTORNEY

Guido M. Sacerdote

Patented Dec. 27, 1932

1,892,605

UNITED STATES PATENT OFFICE

PAUL BETZLER, OF JACKSON HEIGHTS, NEW YORK

WALL CONSTRUCTION

Application filed October 20, 1931. Serial No. 569,869.

This invention relates to building construction and more particularly refers to improvements in the construction of hollow or solid walls.

Primarily, my invention relates to an improved tile or slab adapted to interlock longitudinally with similar tiles or slabs, so as to form longitudinal sections of the side of a wall, composed of a plurality of superimposed such sections. The invention also relates to a locking element adapted to interlock with and bind to each other two opposite sides of the same wall, so as to form a hollow wall in which all the tiles or slabs will be interlocked, said wall being adapted to be rapidly erected or taken apart.

The main object of the invention is to provide a novel and improved construction of wall, composed of interlocking units adapted to be rapidly put together, said wall being adapted to be left hollow or to be made solid by pouring concrete or similar material between the sides thereof.

Another object of the invention is to provide a tile or slab of a novel and improved construction, adapted to interlock with similar tiles or slabs, so as to form a mould, within which concrete may be poured, for the erection of a wall, said units becoming a permanent part of said wall.

A further object is to provide a tile or slab of a novel and improved construction, said slab being in the nature of a relatively thin, flat building unit adapted to be easily handled and rapidly placed in position, where it will interlock with other similar units, both in a transversal and a longitudinal sense, said unit permitting of greatly simplifying and cheapening the construction of concrete walls and also being adapted for use in the construction of partition walls, of an easily removable nature.

Other objects and advantages of the present invention will more fully appear as the description proceeds and will be set forth and claimed in the appended claims.

My invention is illustrated by way of example in the accompanying drawings, in which:

Fig. 1 is a view in elevation of the inner side of the slab or tile, forming one of the main features of my invention;

Fig. 2 is a plan view thereof;

Fig. 3 is an end view of the same;

Fig. 4 is an end view of the same at the opposite end;

Fig. 5 is a view in perspective of a transversal locking element;

Fig. 6 is a view in perspective of two tiles or slabs forming part of opposite sides of a wall, and a transversal locking element interlocking therewith and binding said tiles or slabs to each other;

Fig. 7 is a cross sectional view of my improved tile or slab, through line 7—7 of Fig. 1;

Fig. 8 is a plan view of a horizontal section of a hollow wall built in accordance with my invention;

Fig. 9 is a similar view illustrating another horizontal section adjacent thereto;

Fig. 10 is a fragmentary view in elevation of the exterior of a wall built in accordance with my invention;

Fig. 11 is a fragmentary vertical section of said wall;

Fig. 12 is a fragmentary vertical section of a similar wall, erected upon a foundation wall consisting of a solid block of concrete;

Fig. 13 is a fragmentary view in perspective of a partition wall also embodying my invention;

Fig. 14 is a fragmentary vertical section, illustrating a possible modification of the construction of the units forming one of the features of my invention;

Fig. 15 is a fragmentary front elevation of two adjoining units in the same longitudinal section, illustrating another possible modification; and

Fig. 16 is a horizontal section of the same through line 16—16 of Fig. 15.

A wall constructed in accordance with my invention comprises essentially two transversely spaced wall elements, each consisting of a plurality of superimposed horizontal sections, each section consisting of a longitudinal series of substantially flat units placed edge to edge and interlocking with one another, the units composing one wall

element being positioned and connected to the units composing the other wall elements by separately insertable tie members extending therebetween, said tie members preferably also forming an interlocking connection between the adjoining edges of units belonging to adjoining horizontal sections, so as to form a single wall structure in which each unitary element directly or indirectly interlocks with all the others.

My invention results in a wall structure which can be erected very rapidly and in which all the elementary units composing the same are securely interlocked with the others, and restrained against displacement in all directions the moment they are placed in position, so that there is no chance for any one unit to become displaced or for the regularity of the wall surface to be affected as the work proceeds.

One of the advantages of the method of wall construction advocated is not only that hollow walls can be rapidly and economically erected, but also that a hollow wall structure can be erected in place of the moulds generally prepared for the pouring of concrete, when concrete walls are built, said hollow wall structure becoming an integral part of the completed wall. This procedure results in practice in a considerable saving in material and labor, because moulds made out of lumber require a large amount of carpenter's work, and entail the use of large quantities of lumber, which can rarely be reused for a similar purpose and can only be sold as second-hand lumber.

In Figs. 1 to 7, I illustrate the elementary units employed in the construction of a wall in accordance with my invention.

Referring to Figs. 1, 2, 3, 4 and 7, 20 designates a tile or slab, which is preferably made of cementitious material, such as concrete, in precast form, said tile or slab being square or rectangular in shape, and being preferably reinforced by a grille, or by a core of wire netting, as shown at 21 in Fig. 7.

The tile or slab illustrated is substantially flat and relatively light and thin, so that it can be easily handled. Its construction is also such as to permit of its being rapidly and economically produced by the use of simple moulds.

In Fig. 1 the tile or slab is shown in elevation from its inner side, while in Fig. 2 it is shown in plan from the top. From the drawings it is seen that the tile or slab has a substantially flat upper edge 22, a substantially flat lower edge 23, and a substantially flat side edge 24, provided with a longitudinal groove 25 and the opposite side edge 26 provided with a longitudinal tenon 27, adapted to register and interlock with the groove 25 of an adjoining unit in the same longitudinal row or section.

The upper and the lower edge are each formed with an inwardly directed recess, such as 28, opening at one end upon the inner surface 29 of the tile, as shown at 30, 31. Said recesses are preferably identical to each other, and have a uniform section in the vertical sense, while in the transversal sense they have a dovetailed or equivalent outline, so as to form the female member of a male and female dovetail joint.

Furthermore, the upper and the lower edge are each provided at each end with an inwardly extending notch, such as shown at 32—33, 35—36, the depth of which corresponds to the depth of recesses 28 and the horizontal outline of which corresponds to one-half the horizontal outline of said recesses 28. By virtue of this construction, when two tiles are set edge to edge in a longitudinal direction, the notches 32—36 of one tile will form with the notches 33—35 of the adjoining tile inwardly extending recesses in every way similar to recesses 28 formed centrally of each tile.

A wall constructed in accordance with my invention comprises two transversely spaced wall elements, each consisting of a single thickness of tiles, the tiles being arranged with their inner surfaces 29 facing each other and the outer surface 36 of the tiles forming the outer surfaces of the wall.

The wall elements are built at a predetermined distance from each other and are maintained at said distance by tie members, such as shown at 37, the ends of which 38, 39 are adapted to be inserted within and to interlock with recesses 28.

When the recesses have a dovetailed outline, as shown, the ends 38, 39 of the tie members have a corresponding dovetailed outline, so that the same form the male tenons of the male and female joint, previously mentioned. The height of the tie members is substantially equivalent to twice the depth of recesses 28, so that besides acting as positioning and connecting members between the transversely spaced units of the two wall elements, said tie members also cause the tiles or units forming a longitudinal section of one of the wall elements to interlock in a longitudinal and a vertical sense with the tiles or units composing an adjoining longitudinal section.

In order to render the interlocking action in a longitudinal sense positive and effective, the tiles or units composing a longitudinal section are arranged in a staggered relation with respect to the tiles or units composing an adjoining longitudinal section, as Fig. 10 clearly shows.

It will be observed that while a dovetail joint is used between the tie members and the tiles, the joint between longitudinally adjoining tiles is merely a tongue and groove joint.

When a wall is erected, two parallel longitudinal sections are first built at the proper

distance from each other and as the building of said longitudinal sections progresses, tie members are inserted through the top recesses 28 and through the similar recesses formed by notches 32—33 of adjoining tiles. In building said base longitudinal sections, the tiles are set in position edge to edge by inserting the tongue of each tile within the groove of the adjoining tile by a movement in a horizontal direction. When the next longitudinal section of the wall is built, each succeeding tile is inserted in position with respect to the adjoining tile by a horizontal movement while the lower edge of the tile which is being inserted is vertically spaced from the upper edge of the underlying section a distance sufficient to clear the portion of the tie members projecting above the upper edge of the longitudinal section previously built. Each new tile thus inserted is then lowered in position to interlock with the upper portion of the tie members.

In Figs. 8 to 10 I illustrate a wall built in accordance with my invention, Fig. 8 representing in plan a longitudinal section of the wall, while Fig. 9 represents in plan an adjoining section, and Fig. 10 represents the exterior surface of the wall.

Referring to Figs. 8, 9, it will be seen that the wall is composed of two transversely spaced wall elements 40, 41, each composed of a plurality of tiles placed edge to edge, said wall elements being interconnected by tie members 37. It will be observed that in Fig. 8, the corner of the wall is formed by an outer corner unit 42 and an inner corner unit 43, which are L-shaped, and which have the shorter leg half as long as the inner leg. In Fig. 9 it will be observed that the next longitudinal section of the wall is built with the corner units 42′, 43′, disposed in a reverse relation with respect to the corner units 42, 43, of the underlying section of the wall.

Accordingly, outer corner unit 42′ has its shorter leg placed upon the longer leg of underlying unit 42, whie longer corner unit 43′ has its shorter leg placed upon the longer leg of underlying unit 43. This causes the remaining units composing said two adjoining longitudinal sections to remain in staggered relation with one another, as shown in Fig. 10, where 44 designates the tiles or units composing the base longitudinal section, 45 designates the tiles or units in relation thereto composing the next longitudinal section and 46 designates the tiles or units composing the third longitudinal section, said tiles or units 46, being in a staggered relation with respect to tiles or units 45, and being in vertical alignment with tiles or units 44.

The tie members are preferably provided with a vertical opening 47, through which are inserted vertically extending bars, such as shown at 48, in Fig. 11, said bars preferably having their lower end 49 embedded in the foundation wall 50 and extending up to the top of the wall. While Fig. 11 shows said bars consisting of a continuous length, it will be understood that said figure is merely illustrative of the idea, and that the bars can be vertically extended in sections, the sections being interconnected and gradually increasing the length of the bars as the wall is erected. Bars 48 can thus be used as vertical tie members binding together the elements of and reinforcing the entire section in a vertical sense.

If desired, concrete may be poured between the two wall elements so as to form a solid wall, but as a rule the portion of the wall which is above the ground is left hollow for ventilating, heat insulating and sound deadening purposes.

On the other hand, the foundation wall 50 is formed solid by pouring between its two side elements concrete or other suitable cementitious material 51. In Fig. 11 is shown how the foundation wall itself may be built by pouring concrete between two transversely spaced wall elements, each consisting of tile units such as described.

It is, however, possible to form the foundation wall as a monolithic block in the usual manner, as shown at 52, in Fig. 12. In either case the foundation wall is formed with two longitudinal runways 53, 54, adapted to receive the lower edge of the tiles or units, composing the base longitudinal section of the wall, said runways being spaced a distance corresponding to the distance to be maintained between the two wall elements.

The tiles and tie members described can also be used for the rapid erection of relatively inexpensive partition walls, as shown in Fig. 13. When used for this purpose, a channeled base element 55, preferably made of sheet iron, is laid on the floor 56 as a foundation for the wall, said channeled element being formed with two parallel longitudinal grooves 57, 58, spaced a distance corresponding to the distance intervening between the two wall elements 59, 60. The wall elements are then simultaneously erected in the manner previously described.

As a rule, when light partition walls are erected the use of the vertical reinforcing bars 48 can be omitted. A partition wall constructed in accordance with my invention has the advantage of being relatively inexpensive, light and sound-proof, and also has the very material advantage of being readily adapted to be dismantled without injury to the units composing it, so that the same units can be used over and over again.

Although in practice it is sufficient to form the tile units with substantially flat top and bottom edges, it is within the scope of my invention to provide the same with male and female elements of a tongue and groove joint similar to those provided along the vertical

edges thereof. This possibility is illustrated in Fig. 14, where 61 designates a tile of a longitudinal section of a wall and 62 designates a tile of an adjoining longitudinal section superimposed thereto, the upper edge of tile 61 being provided with a groove 63 and the longer edge of tile 62 being provided with a tongue 64, insertable within said groove.

In a similar manner, while in practice it is more convenient to place the tie members upon and between the upper and lower edges, respectively, of units composing adjoining longitudinal sections, it is possible to provide the side edges of the tiles with notches, such as shown at 65, 66, in Figs. 15, 16, said notches forming dovetailed recesses being adapted to receive and retain the ends of tie members, such as previously described.

Such an arrangement, however, would not provide for a vertical bond between units composing adjoining longitudinal sections, and also would fail to provide a retaining bond between adjoining units in a longitudinal sense; the arrangement previously shown and described is, therefore, much to be preferred.

The outer surface of the tiles forming the inner wall element is preferably provided with a furring strip, such as shown at 67 in Fig. 9, the same affording means for securing thereto lathing for plastering, as shown at 68 in the same figure.

The nature of the building units described is such that they readily lend themselves to the erection of various types of walls, which may vary in their details from those shown and described without necessarily constituting a departure from the inventive idea.

The drawings, therefore, should be considered as being intended for illustrative purposes only and not in a limiting sense.

I accordingly reserve the right to carry my invention into practice in all those ways and manners which may enter, fairly, into the scope of the appended claims.

I claim:

1. A wall construction composed of two transversely spaced wall elements, each consisting of a plurality of superimposed horizontal sections, each section comprising a longitudinal series of substantially flat tiles placed edge to edge, said tiles having top and bottom edge recesses extending from the inner towards the outer surface thereof, and having notches at each end of their top and bottom edges forming similar recesses with corresponding notches of adjoining tiles placed edge to edge therewith in the same longitudinal section, and tie members separately insertable within said recesses, extending between said wall elements, acting as transversal positioning and binding members connecting said wall elements to each other to form a single structure, said tie members interlocking with the recesses of both adjoining edges of tiles in adjoining superimposed longitudinal sections, and restraining said wall elements against both inward and outward displacement with respect to each other, the tiles of each longitudinal section being connected to one another by a tongue and groove joint, the tiles in one longitudinal section being in staggered relation with respect to the tiles of an adjoining longitudinal section.

2. A wall construction composed of two transversely spaced wall elements, each consisting of a plurality of superimposed horizontal sections, each section comprising a longitudinal series of substantially flat tiles placed edge to edge, said tiles having edge recesses extending from the inner towards the outer surface thereof, tie members separately insertable within said recesses, extending between said wall elements, acting as transversal positioning and binding members connecting said wall elements to each other to form a single structure, said tie members interlocking with the recesses of both adjoining edges of tiles in adjoining superimposed longitudinal sections, and a base formed with two transversely spaced longitudinal runways, adapted to receive and retain the lower edge portion of tiles composing the lowermost longitudinal section, said tie members and said runways restraining said wall elements against both inward and outward displacement with respect to each other.

3. A wall construction composed of two transversely spaced wall elements, each consisting of a plurality of superimposed horizontal sections, each section comprising a longitudinal series of substantially flat tiles placed edge to edge, said tiles having edge recesses extending from the inner towards the outer surface thereof, tie members separately insertable within said recesses, extending between said wall elements, acting as transversal positioning and binding members connecting said wall elements to each other to form a single structure, said tie members interlocking with the recesses of both adjoining edges of tiles in adjoining superimposed longitudinal sections, a foundation wall formed with two transversely spaced runways adapted to receive and retain the lower edge portion of tiles composing the lowermost longitudinal section, and vertical reinforcing bars having their lower ends anchored to said foundation wall, and extending vertically thereof, said bars passing through tie members in the same vertical series, and forming vertical binding members for the entire structure.

4. A wall construction composed of two transversely spaced wall elements, each consisting of a plurality of superimposed horizontal sections, each section comprising a longitudinal series of substantially flat tiles placed edge to edge, said tiles having edge

recesses extending from the inner towards the outer surface thereof, tie members separately insertable within said recesses, extending between said wall elements, acting as transversal positioning and binding members connecting said wall elements to each other to form a single structure, said tie members interlocking with the recesses of both adjoining edges of tiles in adjoining superimposed longitudinal sections, a foundation wall formed with two transversely spaced runways adapted to receive and retain the lower edge portion of tiles composing the lowermost longitudinal section, said foundation wall comprising two transversely spaced wall elements each composed of tiles and tie members extending therebetween as previously mentioned, and a filling of cementitious material between said wall elements, forming a solid structure therewith, and vertical reinforcing bars having their lower ends embedded within said cementitious material, and extending vertically of said foundation wall, said bars passing through tie members in the same vertical series, and forming vertical binding members for the entire structure.

5. A wall construction composed of two transversely spaced wall elements, each consisting of a plurality of superimposed horizontal sections, each section comprising a longitudinal series of substantially flat tiles placed edge to edge, said tiles having top and bottom edge recesses extending from the inner towards the outer surface thereof, and having notches at each end of their top and bottom edges forming similar recesses with corresponding notches of adjoining tiles placed edge to edge therewith in the same longitudinal section, tie members separately insertable within said recesses, extending between said wall elements, acting as transversal positioning and binding members connecting said wall elements to each other to form a single structure, said tie members interlocking with the recesses of both adjoining edges of tiles in adjoining superimposed longitudinal sections, the tiles of each longitudinal section being connected to one another by a tongue and groove joint, the tiles in one longitudinal section being in staggered relation with respect to the tiles of an adjoining longitudinal section, and a base formed with two transversely spaced longitudinal runways, adapted to receive and retain the lower edge portion of tiles composing the lowermost longitudinal section, said tie members and said runways restraining said wall elements against both inward and outward displacement with respect to each other.

6. A wall construction composed of two transversely spaced wall elements, each consisting of a plurality of superimposed horizontal sections, each section comprising a longitudinal series of substantially flat tiles placed edge to edge, said tiles having top and bottom edge recesses extending from the inner towards the outer surface thereof, and having notches at each end of their top and bottom edges forming similar recesses with corresponding notches of adjoining tiles placed edge to edge therewith in the same longitudinal section, tie members separately insertable within said recesses, extending between said wall elements, acting as transversal positioning and binding members connecting said wall elements to each other to form a single structure, said tie members interlocking with the recesses of both adjoining edges of tiles in adjoining superimposed longitudinal sections, a foundation wall formed with two transversely spaced runways adapted to receive and retain the lower edge portion of tiles composing the lowermost longitudinal section, and vertical reinforcing bars having their lower ends anchored to said foundation wall, and extending vertically thereof, said bars passing through tie members in the same vertical series, and forming vertical binding members for the entire structure.

7. A wall construction composed of two transversely spaced wall elements, each consisting of a plurality of superimposed horizontal sections, each section comprising a longitudinal series of substantially flat tiles placed edge to edge, said tiles having edge recesses extending from the inner towards the outer surface thereof, tie members separately insertable within said recesses, extending between said wall elements, acting as transversal positioning and binding members connecting said wall elements to each other to form a single structure, said tie members restraining said wall elements against both inward and outward displacement with respect to each other, and vertical bars passing through tie members in the same vertical series, forming vertical binding members for the entire structure.

In testimony whereof I affix my signature.

PAUL BETZLER.