United States Patent

[11] 3,610,817

[72] Inventor **Thomas Austin Bridgewater**
Indianapolis, Ind.

[21] Appl. No. **829,393**
[22] Filed **June 2, 1969**
[45] Patented **Oct. 5, 1971**
[73] Assignee **RCA Corporation**

[54] **TELEVISION SIGNAL SEEKING SYSTEM WITH HORIZONTAL SYNCHRONIZING PULSE DETECTOR CIRCUIT FOR CONTROLLING THE SIGNAL SEEKING**
16 Claims, 2 Drawing Figs.

[52] **U.S. Cl.** ..... **178/5.8 R,** 178/DIG. 15, 307/231, 307/268, 325/470
[51] **Int. Cl.** **H04n 5/44**
[50] **Field of Search** ..... 178/5.8 R, 15.8 F, DIG. 15; 307/232, 234, 231, 233, 239, 268, 317; 334/15; 328/120; 325/469, 470, 471

[56] **References Cited**

UNITED STATES PATENTS

3,117,293	1/1964	Mortley	334/15
3,403,269	9/1968	Thompson	307/234
3,478,270	11/1969	Mayle et al.	178/5.8

OTHER REFERENCES

" Applications of Varactor Diodes" by R. L. Ernst et al. in Electro-Technology of Sept. 1963 pp. 54–59.

Primary Examiner—Robert L. Griffin
Assistant Examiner—George G. Stellar
Attorney—Eugene M. Whitacre

ABSTRACT: A television signal seeking system includes a UHF tuner driven by a bidirectional motor. The motor windings are energized through transistor switching circuits which are coupled to signal sensing circuits. Once the motor switch circuits are actuated, the motor will drive the tuner through the television frequency spectrum until a stopping signal is applied to the motor switch circuits to deenergize the motor winding. The stopping signal is developed in response to (1) the presence of a train of horizontal sync pulses; (2) the presence of a predetermined level of automatic gain control voltage; and, (3) a predetermined level of automatic fine tuning correction voltage. Noise immunity is provided by integrating the horizontal sync pulses so that a predetermined number of sync pulses must occur before the stopping signal can be developed.

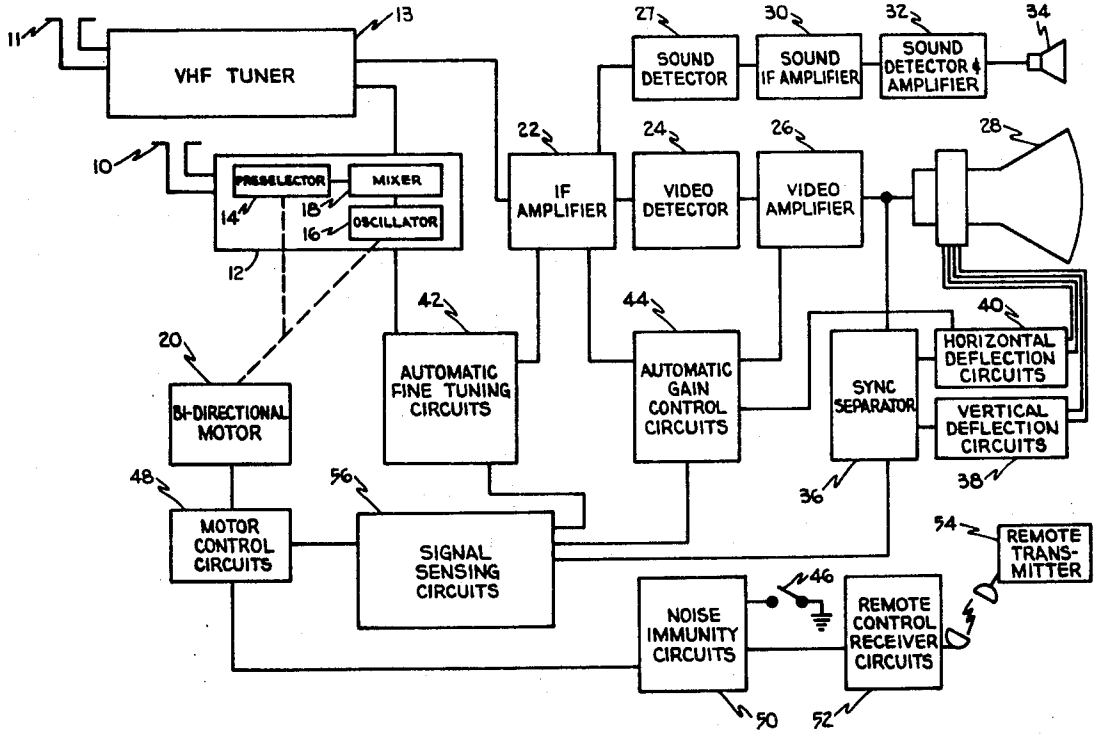

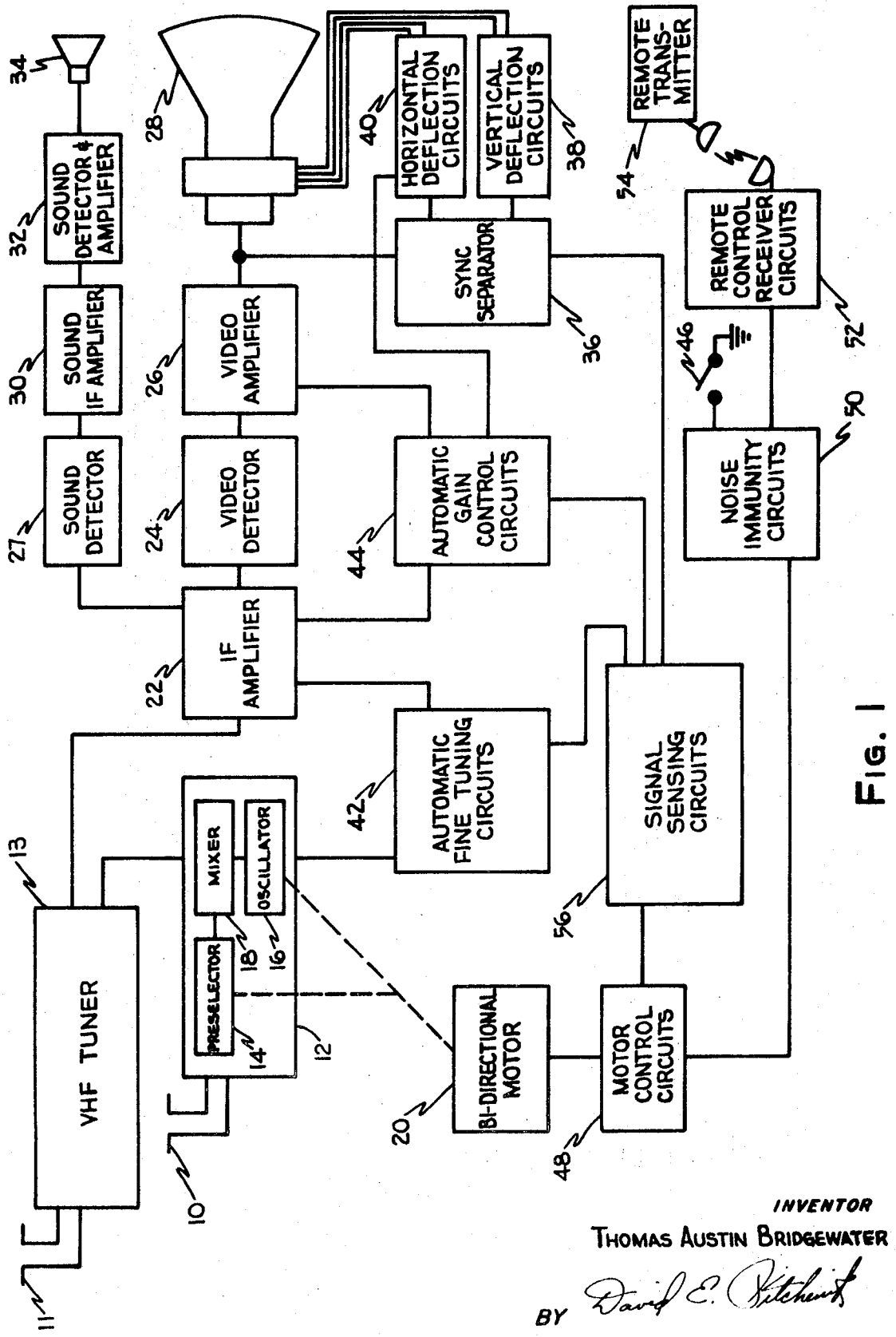

FIG. 1

INVENTOR
THOMAS AUSTIN BRIDGEWATER
BY David E. Kitchen
ATTORNEY

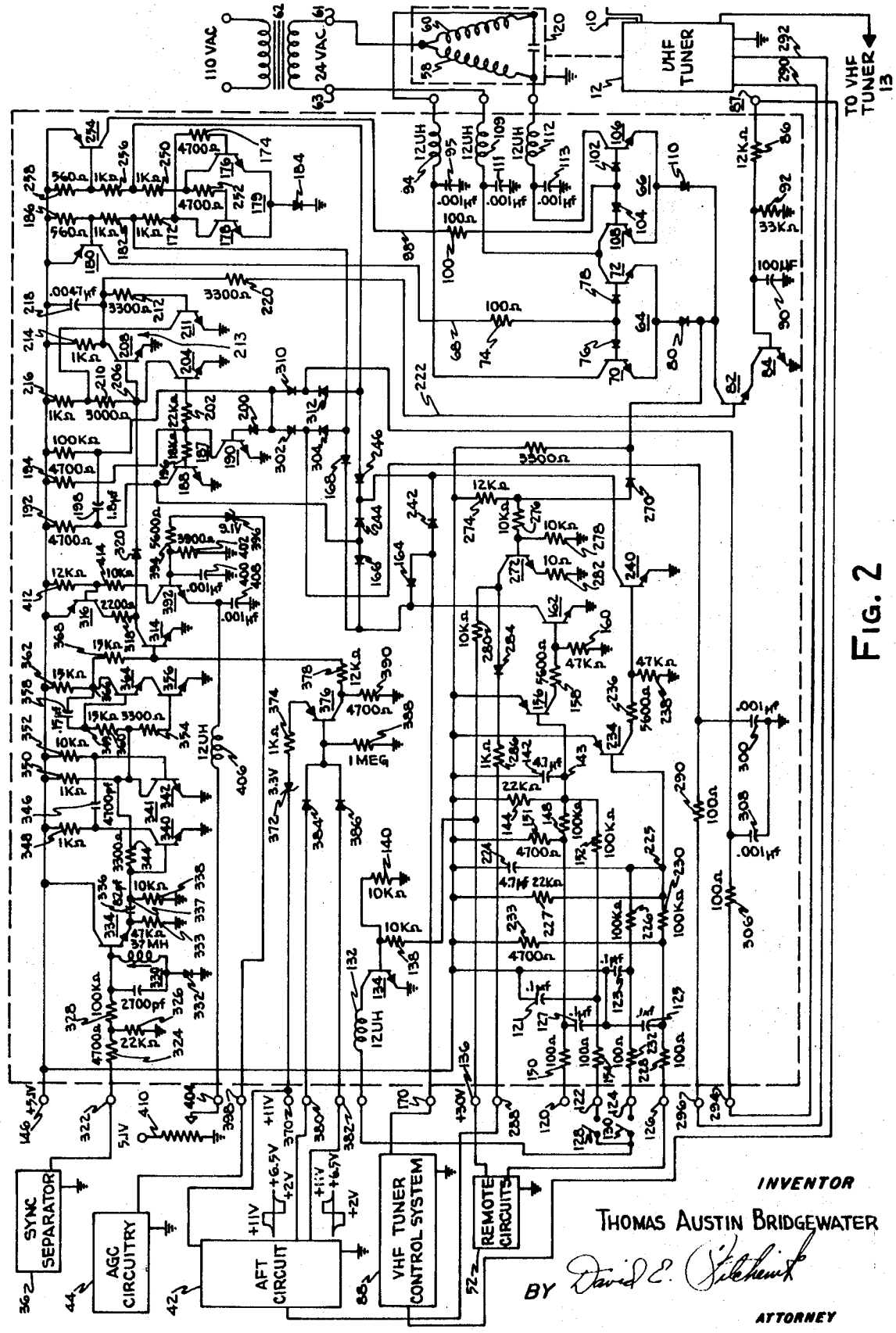

FIG. 2

INVENTOR
THOMAS AUSTIN BRIDGEWATER
BY David E. Kitchen
ATTORNEY

TELEVISION SIGNAL SEEKING SYSTEM WITH HORIZONTAL SYNCHRONIZING PULSE DETECTOR CIRCUIT FOR CONTROLLING THE SIGNAL SEEKING

The present invention relates to a signal seeking tuning system for television receivers, and more particularly to a sensing system for determining the presence of a desired television signal.

Various types of signal seeking television systems have heretofore been proposed, as for example, the system shown in the patent granted to W. F. Dietz, U.S. Pat. No. 3,130,264. Systems of this type employ a driving device, such as a motor, to drive the tuning elements in the television receiver through the frequency spectrum. A signal sensing circuit detects the presence of a television signal being received and actuates a control circuit to stop the motor so that the receiver tuning elements will be tuned to the received signal.

One criterion used in determining the accurate tuning television signal by the signal sensing circuits is the presence of television signal horizontal sync pulses. However, spurious signals and random noise generated in the television synchronizing circuits may be sufficiently similar to the horizontal sync pulse to cause erroneous actuation of the signal sensing circuit, thereby stopping the motor with the television tuning elements improperly adjusted.

A signal seeking tuning system for television receivers includes a motor for driving the tuning elements of the receiver. Control circuitry for the motor includes a switch which is responsive, at least in part, to the horizontal synchronizing information from the receiver where tuning is to be controlled. The horizontal synchronizing pulses of a received television signal are integrated to provide a noise immune control signal for the motor control circuit to stop the motor at the desired tuning position.

In accordance with an embodiment of the invention, the motor control circuitry includes a pair of series connected devices. Circuit means apply the horizontal synchronizing pulses to one of the devices to change its conductivity in response to the individual synchronizing pulses. Integrating circuit means apply the horizontal synchronizing pulses to the control electrode of the second device to change its conductivity after a predetermined number of output pulses have occurred. The motor control circuitry is responsive to the change in conductivity of both of said devices for controlling the energization of said motor.

A complete understanding of the invention may be obtained from the following detailed description of a specific embodiment thereof, when taken in conjunction with the accompanying drawing, in which:

FIG. 1 is a block diagram of a signal seeking television tuning system embodying the present invention;

FIG. 2 is a schematic diagram of circuitry incorporated in the signal seeking tuning system shown in FIG. 1.

Referring now to the drawing, FIG. 1 illustrates a television receiver which includes a signal seeking tuning system in accordance with the invention. The television receiver may be an RCA Corporation CTC–40 series color television chassis which is shown in the "Television Service Data," File 1968, No. T20, published by RCA Sales Corporation, 600 North Sherman Drive, Indianapolis Ind. The television receiver shown in the block diagram of FIG. 1 is greatly simplified and does not purport to show all of the circuitry of a television chassis.

An antenna **10** for intercepting television signals in the ultrahigh frequency (UHF) band is coupled to a UHF tuner **12**. The UHF tuner **12** includes a resonant UHF preselector **14** and a local oscillator **16** for generating heterodyning signals. Both the preselector **14** and the local oscillator **16** are coupled to a mixer circuit **18** which heterodynes the received television signals and the locally generated signal to provide a correspondingly modulated signal of intermediate frequency (IF). Both the preselector **14** and the oscillator **16** include continuously variable tuning elements which are ganged for movement together and coupled to be driven by a motor **20**.

A second antenna **11** for intercepting very high frequency (VHF) signals is coupled to a VHF tuner **13**. The VHF tuner is switched to select any one of the VHF television channels **2–13**, and may also be switched to a position to amplify IF signals from the UHF tuner **12**.

The VHF tuner **13** either converts received VHF signals to the receiver IF or amplifies IF signals from the UHF tuner **12** and applies them to an IF amplifier **22**. The IF amplifier **22** is coupled to a video detector **24** which derives a composite video signal which is amplified by a video amplifier **26** and applied to a picture tube **28**.

An intercarrier sound signal, produced by the interaction of the picture and sound intermediate frequency signals is detected by a separate intercarrier sound detector **27** and then applied to a sound intermediate frequency amplifier **30**. The amplifier **30** is tuned to the 4.5 megacycle frequency of the intercarrier sound signal, which is the fixed frequency separating the picture carrier from the sound carrier in a typical transmitted television signal. The amplified sound IF output from the amplifier **30** is demodulated and amplified in a sound demodulation loudspeaker **34**.

The composite video signal is also applied from the video amplifier **26** to a synchronizing signal separator **36**. The separator **36** separates the vertical synchronizing pulses and applies them to vertical deflection control circuits **38** to control the vertical deflection of the cathode ray beam in the picture tube **28**. The separator **36** also separates and applies the horizontal synchronizing pulses to horizontal deflection control circuits **40** to control the horizontal deflection of the cathode ray beam in the picture tube **28**.

Automatic fine tuning circuits **42** are coupled between the IF amplifier **22** and the UHF tuner **12**. The automatic fine tuning circuits develop a correction voltage which, over a predetermined frequency range, varies as a function of the resultant intermediate frequency and applies this voltage to a variable capacitance device to adjust the oscillator frequency so that the tuning of the resultant IF signal will be at the desired frequency. A keyed automatic gain control (AGC) circuit **44** is coupled to the video amplifier **26** and horizontal deflection circuits **40** to develop an AGC voltage which varies in amplitude as a function of the level of received television signal. The AGC voltage is applied to the IF amplifier **22**, and to the radio frequency amplifier stage in the VHF tuner **13**, the latter connection is not shown.

The circuits which have been described thus far are known circuits utilized in present day commercial television receivers, such as the CTC–40 color television chassis cited above.

To energize the bidirectional motor **20** to drive the UHF tuner shaft and thereby tune the preselector and oscillator tunable resonant circuits across the UHF frequency band, a switch **46** is depressed. The switch is coupled to a motor control circuit **48** through a noise immunity circuit **50**. The noise immunity circuit prevents the presence of spurious signals which may be introduced into the system through the remote control receiver circuits **52** from erroneously actuating the system. The bidirectional motor **20** can also be energized by the transmission of a signal at a location remote from the receiver by a remote transmitter **54**. The transmitted signals are received by the remote control receiver circuits **52** and applied through a noise immunity circuit **50** to the motor control circuit **48**, thereby causing the motor to run.

A signal sensing circuit **56** is connected to the motor control circuit **48** and provides a signal to the motor control circuit which will stop the bidirectional motor **20** when the signal sensing circuits have determined the presence of a desired television signal. The signal sensing circuits **56** are responsive to horizontal sync pulses from the sync separator **36**, the AGC voltage from the AGC circuits **44**, and the AFT voltages from the AFT circuit in determining when to provide the signal to the motor control circuit **48**.

FIG. **2** shows the motor control circuits **48** and the signal sensing circuits **56** in greater detail, with the circuits as-

sociated therewith shown in block form. Essentially, the motor control circuits **48** comprise three switching means connected in series. All three switches must be closed before the motor is energized. The first switching means comprises a pair of switches **64** and **66** which determine the direction of rotation of the motor. The other two switches comprise the transistors **82** and **84**. When one of the switches **64** and **66** is closed, and the switches **82** and **84** are closed, the motor **20** is energized to drive the UHF tuner to tune to the next higher or lower channel in the UHF television band.

To change UHF channels a pair of manual control buttons **128** and **130** are provided which permit tuning to the next higher or lower channel in the UHF television band, respectively. Corresponding switching means are provided for remote actuation. When one of the manual control buttons is depressed, circuit means is actuated to cause the VHF tuning system to be switched to a position to amplify IF signals from the UHF tuner **12**. When the VHF tuner is so switched, a control voltage is provided through terminal **87** to close the switch comprised by the transistor **84**. In addition, one of the switches **64** and **66** is closed depending on which of the manual control buttons **128** and **130** is actuated. Still further, actuation of the manual control button causes a bistable multivibrator **213** to close the switch comprised of the transistor **82**. Time-delay means are associated with the multivibrator circuit **213** to insure that the switch **82** is closed for a sufficient period of time that the motor can drive the UHF tuner away from a previously selected UHF television channel. Still further, the AFT circuits are prevented from affecting the tuning of the UHF tuner **12**.

The multivibrator circuit **213** referred to is also responsive to a voltage from the signal sensing circuit **56** (FIG. 1) to open the switch comprised of the transistor **82** when a UHF television channel of predetermined signal strength is received. The signal sensing circuits **56**, as mentioned above, are responsive to horizontal sync pulses from the sync separator **36**, the AGC voltage from the AGC circuits **44**, and the AFT voltages from the automatic fine tuning circuits **42**. The horizontal synchronizing pulses are integrated to provide a control voltage after a sufficient number of pulses have been received. The control voltage is applied to one input terminal of a gate circuit **314–316**. The AGC voltage and an adjustable DC voltage providing a sensitivity control, is applied to another input terminal of the gate circuit. A control voltage which is developed in response to the automatic fine tuning circuit **42** operation is applied to a third input terminal of the gate circuit.

The automatic fine tuning circuit provides a control voltage which varies as a function of the frequency of the IF television signal. The control voltage increases (or decreases) in amplitude from a first value as the frequency of the IF signal changes from its desired value. When the frequency of the IF signal is outside pull-in range of the automatic fine tuning circuit **42** the control voltage is at its first value.

As the UHF tuner scans the UHF television frequency band the control voltage produced by the AFT circuit **42** will change abruptly when a transmitted UHF television signal causes an IF signal which is within the pull-in range of the AFT circuit **42**. If horizontal synchronizing information and AGC voltage of sufficient magnitude are present, the gate circuit causes the bistable multivibrator **213** to change states and open the switch comprised of the transistor **82** to stop the motor **20**. The inertia of the mechanical system will bring the motor and the UHF tuning control elements to the desired frequency.

During the tuning operation the automatic fine tuning circuit is not effective to control the UHF tuner **12**. Once the motor **20** is deenergized, the automatic fine tuning circuit **42** is effective to control the frequency of the oscillator **16** in the UHF tuner **12** to produce an IF signal of the desired frequency.

As previously mentioned, the tunable resonant circuits of the UHF tuner **12** are mechanically ganged for rotation by the bidirectional AC motor **20**. The motor **20** includes two windings **58** and **60**, the common junction of which is coupled to one end **61** of the secondary winding of a transformer **62**. The transformer primary winding is adapted to be energized by 110 volt AC line voltage to provide a 24 volt AC output across its secondary winding. The remaining end of the motor windings **58** and **60** are selectively connected to the other end **63** of the secondary winding of the transformer **62** through motor switching circuits **66** and **64**, respectively.

To close the motor switching circuit **64** and energize the motor winding **60**, a positive voltage is applied to the base electrodes of two transistors **70** and **72** via a conductor **68**, a resistor **74** and a pair of diodes **76** and **78**. The transistors **70** and **72** will be biased into conduction if the emitter electrodes of the transistors are electrically connected to ground for direct current. The path to ground for the emitter electrodes of the transistors **70** and **72** includes a diode **80**, the collector-emitter current path of a transistor **82** and the collector-emitter current path of a transistor **84**.

The base electrode of the transistor **84** is coupled by a resistor **86** and a terminal **87** to a VHF tuning control system **88**. When the VHF tuner **13** (FIG. **1**) is switched by the VHF tuning control system **88** to amplify IF signals from the UHF tuner **12**, the VHF tuning control system **88** causes a positive voltage to be applied to the base electrode of the transistor **84**. Conduction of the transistor **84** is delayed by approximately 200 milliseconds by the resistor **86** in combination with the parallel connected capacitor **90**—resistor **92**. This action provides an interlock between the VHF and UHF systems such that the UHF tuning motor cannot be caused to operate until the VHF system has established the proper conditions for UHF operation.

With the transistors **70** and **72** biased into conduction, an AC path is provided from the terminal **61** of the secondary winding through the winding **60**, the inductor **94**, the collector-emitter current path of the transistor **70**, the emitter-collector current path of the transistor **72** and the inductor **109** to the second terminal **63** of the secondary winding. The alternating current flowing through the winding **60** causes the motor to run and tune the UHF tuner across the UHF frequency band in a first direction.

The tuner will tune across the UHF frequency band in the second direction when a positive potential is applied to the lead **98**. The voltage is applied via a resistor **100** and two diodes **102** and **104** to the base electrodes of the transistors **106** and **108**. As before, with a positive voltage applied to the base electrodes of transistors **106** and **108**, and the transistors **82** and **84** biased for conduction, the bidirectional motor winding **58** is electrically connected across the secondary winding of the transformer **62** and the motor **20** will drive the UHF tuner **12** in the opposite second direction. The AC current path is from the first terminal **61** of the transformer through the motor winding **58**, the inductor **112**, the collector-emitter current path of the transistor **106**, the emitter-collector current path of the transistor **108**, the inductor **109** to the second terminal **63** of the transformer secondary winding. The inductors **94**, **109**, and **112** in conjunction with the capacitors **95**, **111** and **113** provide protection against large transient spike voltages which may be induced by arcing in the television receiver.

It should be noted that when the system is actuated either remotely or manually the VHF system **88** will provide a positive voltage at the terminal **87** and a positive voltage is developed at one of the leads **68** and **98** as well as the base electrode of the transistor **82**. The motor will begin to run and continue running until the transistor **82** is made nonconductive by a reverse bias which is applied to its base electrode when a desired UHF television signal is tuned in.

Four input terminals **120**, **122**, **124**, and **126** are associated with the actuation of the motor **20**. The input terminals are protected against high-frequency transients (which may be associated with switch closings) by the capacitors **121**, **123**, **125** and **127** and their associated resistors **150**, **154**, **228** and **232**

which provide high-frequency filtering. A change in potential at any one of these four terminals will (a) cause the VHF tuner **13** to switch to operate as an amplifier for IF signals from the UHF tuner, (b) apply a turn on voltage to the transistor **84**, (c) apply a positive voltage to one of the leads **68** and **98**, and (d) apply a positive voltage to the base electrode of the transistor **82**. A change in voltage at the terminals **120** and **122** controls the application of positive voltage to lead **68** and a change in voltage at the terminals **124** and **126** controls the application of positive voltage to lead **98**. The voltage at terminals **120** and **126** may be controlled from a remote location by remote circuits **52**. The remaining two terminals **122** and **124** are connected to switches **128** and **130** which may be positioned on the television chassis front panel for actuation by the viewer. The switches **128** and **130** are connected by an inductor **132** through the collector-emitter path of a transistor **134** to ground. Bias for the transistor **134** is derived from a 30 volt potential applied to a terminal **136** through a voltage divider including the resistors **138** and **140**.

In the present instance, the television chassis is designed to have a standby condition in which certain components such as the picture tube filaments are at least partially energized. Under these conditions no voltage is applied to terminal **136** and the normally conductive transistor **134** becomes nonconducting and the ground return for the switches **128** and **130** is removed. Thus, with the system in its standby condition, the switches **128** and **130** are made inoperative.

When the switch **128** is closed or the terminal **122** is brought to ground potential for a period of time, a capacitor **142**, which is normally kept discharged by a parallel connected resistor **144**, begins to charge from a 5.1 volt source of potential applied to a terminal **146**. The capacitor charging path is from the terminal **146** through the capacitor **142** and through either of the resistors **148** and **150** associated with the terminal **120** or the resistors **152** and **154** associated with the terminal **122**. The terminal **120** is coupled to the 5.1 volt potential at terminal **146** by resistor **150** and resistor **151** to provide operating potential for the output stage of the remote circuits **52**. As the capacitor **142** begins to charge, the voltage at the junction **143** of the capacitor and the resistors **148** and **152** begins to drop. As the capacitor **142** continues to charge the voltage decreases to a point such that the transistor **156** whose base electrode is coupled to the junction becomes conductive. When this occurs, the voltage at the terminal **146** is applied through the emitter-collector path of the transistor **156** and via the voltage divider including the resistors **158** and **160** to the base electrode of a transistor **162** causing it to become conductive.

Conduction of the transistor **162** causes three diodes **164**, **166**, and **168** to become conductive. The diode **164** brings the terminal **170** to substantially ground potential to apply an input signal to the VHF tuning control system **88** such that it will switch the VHF tuner **13** to amplify IF signals from the UHF tuner **12**. In turn the VHF tuning control system **88** causes a positive voltage to be applied to the terminal **87** associated with the base electrode of transistor **84**.

When the diode **168** conducts the base electrode of transistor **176** is connected to ground via resistors **174** and **172**, diode **168** and transistor **162**. The transistor **176** and a second transistor **178** comprise a bistable multivibrator **179**. When the transistor **176** becomes nonconductive, the transistor **178** becomes conductive. Conduction of the transistor **178** turns on the normally nonconductive transistor **180**. The conduction of the transistor **180** causes the positive 5.1 volts at the terminal **146** to be applied to the base electrodes of transistors **70** and **72** causing the bidirectional motor **20** to rotate in one of its two directions.

Conduction of the diode **166** triggers a monostable multivibrator **187** including the transistors **188** and **190**, along with their interconnecting components, the resistors **192**, **194**, **196**, the capacitor **198**, and the diode **200**. In the astable state of the multivibrator, the normally conducting transistor **190** becomes nonconductive for a predetermined period of time. The positive voltage thereby developed at the collector electrode of the transistor **190** is applied via a resistor **202** to the base electrode of a transistor **204**. The transistor **204**, normally biased to be nonconducting, is biased into conduction for the duration of the positive voltage at the collector electrode of the transistor **190**. For the component values shown in the drawing for the multivibrator **187**, when triggered the monostable multivibrator will provide a 120 millisecond positive pulse output at the collector electrode of the transistor **190**.

Conduction of transistor **204** causes the terminal **206** of the base electrode of a transistor **208** and a resistor **210** to be connected to ground through the collector-emitter current path of the transistor **204**. At this point it should be noted that the detection of a desired television signal by the signal sensing circuits **56** ultimately causes a positive voltage to be applied to the terminal **206**. This will be explained in greater detail hereinafter; however, it should be understood that the grounding of the terminal **206** is, for the remaining portion of the system, an indication that a desired UHF television signal is not present.

The transistor **208** and a second transistor **211** form a bistable multivibrator **213**. Thus, the base electrode of the transistor **211** is connected to the collector electrode of the transistor **208** by a resistor **212**, and the base electrode of the transistor **208** is connected to the collector electrode of the transistor **211** by the resistor **210**. Operating potential for transistors **208** and **211** is obtained from the 5.1 volt source of potential at the terminal **146** through the resistors **214** and **216**, respectively. As can be seen, the grounding of the terminal **206** causes the transistor **208** to become nonconductive and remain nonconductive for at least the duration of the conduction period of the transistor **204**. The transistor **208** will remain nonconductive, thereafter, until a positive voltage is developed at the terminal **206**. When the transistor **208** becomes nonconductive, the voltage at the collector electrode rises after the time delay afforded by the capacitor **218** and resistor **214** and is applied via a resistor **220** and lead **222** to the base electrode of the transistor **82**.

This mechanism is provided so that when the UHF system is tuned for reception of a UHF television signal, and the terminals **120** and **122** are grounded to cause the system to run and seek out another UHF television signal, the signal sensing circuitry portion of the seeking signal system is disabled for a period of time which permits the motor **20** to drive the UHF tuner **12** away from its last tuning condition where all the criteria for stopping are present in the signal sensing circuits **56**. The UHF tuner **12**, once the motor **20** begins to run, will tune throughout the UHF frequency band until a desired television signal is received at which time a positive voltage will develop at the junction **206** and cause the transistor **82** to become nonconductive. This will "open" the actuated one of the switching circuits **64** and **66** and stop the bidirectional AC motor **20**.

The input to the signal seeking system to cause the bidirectional motor **20** to run in the opposite direction is achieved by manual actuation of the switch **130** or by remote control of the voltage at the terminal **126**. When the voltage at either one of these terminals is changed (brought to ground potential), a capacitor **224** begins to charge. The capacitor is maintained normally discharged by a resistor **227** which is connected in parallel with the capacitor. The charging path for the capacitor **224** is from the 5.1 volt supply at the terminal **146** through the capacitor and through either of the resistors **226** and **232** or **230** and **228** to ground, depending on which one of the terminals **124** and **126** is actuated. The terminal **126** is coupled to the 5.1 volt potential at terminal **146** by resistor **228** and resistor **233** to provide operating potential for the output stage of the remote circuits **52**. The charging of the capacitor **224** causes the voltage at the junction **225** of the capacitor and the resistors **226** and **230** to begin to decrease such that, after a sufficient period of time, the transistor **234** will be biased into conduction. When the transistor **234** is con-

ducting the 5.1 source of potential at the terminal **146** is applied through the emitter-collector current path of the transistor and a voltage divider including the resistors **236** and **238** to the base electrode of a transistor **240** whereby the transistor **240** is biased into conduction.

In a manner similar to that described in connection with the transistor **162**, the conducting transistor **240** causes the diodes **242**, **244** and **246** to become conductive. The **242** applies an input signal to the VHF tuning control system **88** to cause the VHF tuner **13** to switch to the UHF position and to cause a positive voltage to be applied to the base electrode of transistor **84**. Conduction of the diode **244** triggers the monostable multivibrator **187** to produce a positive voltage pulse at the collector electrode of the transistor **190** which causes the normally nonconducting transistor **204** to become conductive for the duration of the positive voltage pulse. Thus, the terminal **206** is connected to ground through the collector-emitter current path of the transistor **204** and provides an input to the motor control portion of the system which overrides the signal sensing circuit output at the terminal **206** and causes the transistor **82** to be biased into conduction. At this time, a positive voltage applied to one of the leads **68** and **98** will actuate one of the motor switches **64** and **66**.

Conduction of the diode **246** triggers the bistable multivibrator **179** by electrically connecting the base electrode of the transistor **178** to ground via the resistors **250** and **252**. The transistor **178** becomes nonconductive and the transistor **176** becomes conductive. Conduction of the transistor **176** electrically connects the base electrode of a transistor **254** to ground through a resistor **256**, the resistor **250**, the collector-emitter current path of the transistor **176**, and the diode **184**. The transistor **254**, which is normally biased off because of the voltage applied to its base electrode via the resistor **258**, becomes conductive and connects to the 5.1 volt supply at the terminal **146** through the transistor's emitter-collector current path to the lead **98** thereby actuating the motor switch **66** and energizing the motor winding **58**.

A transistor **272** is biased for conduction from the 5.1 volt supply at the terminal **146** via the resistors **274**, **276** and **278**. When the transistors **82** and **84** conduct, a diode **270** connected between the junction of resistors **274** and **276** and the collector electrode of transistor **82** becomes conductive, resulting in a change in bias which causes transistor **272** to become nonconductive. With transistor **272** nonconductive, the 30 volt supply at terminal **136** is coupled through a diode **284**, a resistor **286**, and a terminal **288** to the automatic fine tuning circuit **42**. This voltage actuates circuits in the automatic fine tuning circuit **42** which prevents the application of a correction voltage to the UHF tuner oscillator. This is desirable because it prevents the AFT system from changing the oscillator frequency to offset the initial detuning of the UHF oscillator circuit from its last position (when the resonant circuits are tuned to receive an incoming UHF signal) by the motor **20**. If the AFT correction were permitted to be applied to the oscillator, the initial returning as the motor begins to run, would be compensated by the oscillator change.

The 30 volts developed at the collector electrode of the transistor **272** may be also used as a sensing voltage to actuate suitable means for muting the video and audio circuits during the period of time when the UHF system is seeking out the next succeeding television signal in the UHF frequency band.

Since most commercially available UHF tuners do not provide a 360° free turning shaft and are usually designed to provide approximately 180° of rotation, as for example, the KRK-132 UHF tuner used with the CTC-40 color television chassis, provision must be made for reversing the motor when the tuner shaft reaches the limit of its rotational range. Once the motor **20** begins to run it may drive the UHF tuner shaft from its last position to a tuner shaft rotational end stop. This will occur where no UHF signal is present over the portion of the UHF band between the last received UHF signal and the end of the band as determined by the signal sensing circuit **56**. A switch, or a pair of switches, not shown, are provided in the UHF tuner for actuation when the tuning shaft rotates to its limit positions. The switches when actuated at the limit positions of the UHF tuning shaft couple one or the other of the conductors **290** and **292** to ground. The conductors **290** and **292** are connected to the terminals **294** and **296** of the motor control circuits.

When the tuning shaft of the UHF tuner **12** reaches one limit position, the conductor **292** and terminal **296** are grounded, so that after the time delay associated with the resistor **298** and capacitor **300**, the diodes **302** and **304** become conductive. The diode **304** triggers the bistable multivibrator **179** causing the transistor **178** to become conductive and bias the transistor **180** into conduction in a manner previously described. This applies a positive potential to the lead **68** and causes the motor switch **64** to be actuated. Conduction of the diode **302** cuts off the transistor **190**. As a result, the normally nonconducting transistor **204** is biased into conduction and holds the terminal **206** at a low potential until the tuner shaft has been driven away from its end stop position by the motor **20**. This insures that the motor will move away from its end stop position and provides protection against accidental damage to the tuner by forcing the tuner shaft against its rotational end stops. The motor will reverse direction and run until a UHF signal of sufficient strength is being received.

In a similar manner, a grounding of the conductor **290** and terminal **294**, after a period of delay provided by the resistor **306** and capacitor **308**, causes the diodes **310** and **312** to become conductive. The conduction of the diode **312** applies a ground potential to the bistable multivibrator **179** which causes the transistor **176** to become conductive and bias the transistor **254** into conduction. This applies a positive voltage on the lead **98** and causes the motor switch **66** to be actuated and the motor **20** to drive the tuner shaft in the opposite direction.

Once the bidirectional motor **20** is energized to drive the tuner shaft, the motor continues to run until the signal sensing circuitry **56** determines the presence of a desired UHF television signal. When a desired UHF signal is received, a positive voltage is developed at the terminal **206** which triggers the bistable multivibrator **213** and causes transistor **208** to become conductive. The low potential at the collector electrode of the transistor **208**, as previously mentioned, is applied via the resistor **220** and the lead **222** to the base electrode of the transistor **82**. The transistor **82** at this time becomes nonconductive and causes the actuated one of the motor switches **64** and **66** to be opened. That is, the path from the emitter electrodes of the switching transistors associated with the motor switches **64** and **66** are no longer connected electrically to ground and the transistors are, therefore, no longer biased into conduction, notwithstanding the fact that a positive voltage is applied to one of the leads **68** and **98**. The motor windings are no longer energized and the motor **20** stops driving the tuner shaft, the UHF tuner **12** being set for reception of the incoming UHF television signal sensed by the signal sensing circuitry **56**.

The signal sensing circuits provide a positive voltage to the terminal **206** when horizontal synchronizing information is derived from the sync separator; when a predetermined change in automatic fine tuning correction voltage occurs; and finally when a suitable level of automatic gain control voltage is present. When these three criteria are met, the transistor **314** is biased out of conduction and the transistor **316** is biased into conduction permitting a positive voltage to be developed at the collector electrode of the transistor **314** which is applied through the diode **320** to the terminal **206**, causing the tuner motor to stop. When no UHF signal is being sensed by the signal sensing circuit **56**, the transistor **314** is biased for conduction and the transistor **316** for nonconduction. It will be recognized that the transistors **314** and **316** comprise an AND gate for the presence of synchronizing information, AFT information, and automatic gain control information to provide a positive output when they simultaneously occur.

The sync separator **36** is connected to a terminal **322**. In the CTC–40 series chassis, the terminal **322** may conveniently be connected via a 10 kilo-ohm resistor to terminal A on the PW 500 circuit board. The terminal **322** is coupled by a resistor network including the resistors **324**, **326**, and **328** to a tuned circuit **330**. The tuned circuit **330** is tuned to 16.2 kHz. slightly above the horizontal sync pulse frequency. The tuned circuit **330**, in conjunction with a diode **332** connected between the circuit and ground, provides peaking and shaping of the detected horizontal synchronizing pulses.

The voltage developed across the tuned circuit **330** and diode **332** is applied to the base electrode of a transistor **334** which is connected as an emitter follower to provide an impedance transformation. The output signal derived across the emitter follower's resistor **333** is applied across the series connected capacitor **336** and resistor **338**. The resulting differentiated pulses appearing at the junction **337** of the capacitor **336** and resistor **338** is applied as a triggering pulse to the base electrode of a transistor **340** which is part of a monostable multivibrator **341**. The monostable multivibrator **341** includes the transistor **340** and a transistor **342**, with the interconnecting circuit components, a resistor **344** and a capacitor **346**. Operating potential for the transistors **340** and **342** is derived from the 5.1 volt supply at the terminal **146** via the resistors **348** and **350**. Bias to the base electrode of the transistor **342** is provided via a resistor **352** to cause that transistor to be normally conducting.

Thus the normally conducting transistor **342** is turned off for uniform periods of time (developing a positive voltage at its collector electrode) by the incoming horizontal sync pulse information. The positive voltage pulses developed at the collector electrode of the transistor **342** are coupled via a resistor **354** to the base electrode of a transistor **356** causing the transistor **356** to be periodically biased into conduction. Simultaneously, during the nonconducting periods of transistor **342** a normally charged capacitor **358** begins to discharge through the series connected resistors **360**, **350** and **362**. The capacitor **358** is normally maintained in its charged state by the current path from the 5.1 volt supply at the terminal **146**, through the resistor **362**, the capacitor **358**, the resistor **360** and the collector-emitter current path of the normally conducting transistor **342** to ground.

After the monostable multivibrator **341** has been triggered a sufficient number of times, the integrating capacitor **358** will discharge to a level such that the voltage developed at the junction **349** of the capacitor **358** and resistor **360** is sufficiently positive to bias transistor **364** into conduction. The transistor **364** will remain conductive as long as the capacitor **358** remains sufficiently discharged. Thus, the junction **366** of the collector electrode of the transistor **364** and resistor **362** will be periodically connected to ground through the collector-emitter current path of the transistor **364** and the collector-emitter current path of the transistor **356**, at the repetition rate determined by the output of the monostable multivibrator. That is, as long as horizontal synchronizing information continues to be provided at the terminal **322**, the transistor **364** remains biased for conduction while the transistor **356** is periodically rendered conductive. It should be recognized that the integrating action of capacitor **358** keeps the transistor **364** cut off until a predetermined number (approximately **30** for the component values shown in the drawings) of incoming horizontal sync pulses are received at which time the potential at the junction **366** will drop at a repetition rate determined by the incoming horizontal sync pulses and for a period of time determined by the time constant of monostable multivibrator **341**.

The base electrode of the transistor **314** derives its bias, in part, from the junction **366** via the resistor **368**. In addition, bias is provided to the base electrode of the transistor **314** from an 11 volt supply at the terminal **370** through a 3.3 volt Zener diode **372**, a resistor **374**, the emitter-collector current path of a transistor **376**, and a resistor **378**. The 11 volt supply at the terminal **370** may also be used as the source of operating potential for the AFT circuits **42** to minimize the effects of supply voltage variation on the AFT portion of the search system. Consequently, the transistor **314** will continue to be biased into conduction, even though horizontal sync pulses are being received, while the transistor **376** remains biased into conduction.

The base electrode of the transistor **376** is connected to the automatic fine tuning circuits **42** via the terminals **380** and **382** and the diodes **384** and **386**. The automatic fine tuning circuits **42** are of the type used in the CTC–40 chassis, supra, and are described in a U.S. patent granted to Jack Avins, U.S Pat. No. 3,444,477. The AFT circuits provide two output voltages each of which varies from approximately +2.0 volts to +11.0 volts in opposite senses. That is, when the IF signal is at the proper frequency in the IF pass band, i.e. at 45.75 MHz, the automatic fine tuning circuit provides a +6.5 output voltage at each of the AFT terminals **380** and **382**. As the IF video carrier becomes progressively detuned in a first direction from 45.75 MHz, the AFT output voltage changes; the voltage at terminal **380** will vary from +6.5 volts to +11.0 volts and the voltage at terminal **382** will vary from +6.5 volts to +2.0 volts. When the detuning progresses beyond the AFT frequency pull-in range, each of the AFT outputs will return to +6.5 volts. If the IF signal becomes progressively detuned in a second direction from 45.75 MHz. the voltages at terminals **380** and **382** will be reversed. It should be understood that the AFT correction voltages referred to are the open loop voltages, the AFT voltage outputs where no correction voltage is being applied to the oscillator **16**. The voltages developed by the AFT circuitry are shown adjacent the AFT circuits **42**. One suitable system for obtaining open loop AFT voltages is disclosed in a U.S. Pat. application entitled, "Television System," filed June 2, 1969, Ser. No. 829,191, in the name of Wayne Wheeler Evans, and assigned to the RCA Corporation.

The 3.3 Zener diode **372** reduces the operating voltage at the emitter electrode of the transistor **376** to 7.7 volts. When the transistor **376** is conducting, a voltage of approximately 7.1 volts is established across the resistor **388**. This voltage is established by the current flow through the emitter-base electrode current path of the transistor and the resistor **388** to ground. The voltage established at the base electrode of the transistor provides a cathode bias on the diodes **384** and **386**. Consequently, when no incoming UHF TV signal is detected by the AFT circuits **42**, +6.5 volts is developed at the terminals **380** and **382** and the diodes **384** and **386** are reverse biased.

As the UHF tuner is tuned across the UHF TV band an incoming signal detected by the automatic fine tuning circuits **42** and just falling within the AFT pull-in range causes the voltages at the terminals **380** and **382** to deviate from +6.5 volts in opposite direction toward +2 and +11 volts. The +11 volt AFT voltage will forward bias its associated diode. The voltage applied from the AFT terminal and through the forward biased diode will cut off the transistor **376**. The momentum of the motor **20**, after the motor windings have been deenergized, will cause a further change in the tuning and bring the IF video carrier to 45.75 MHz (the AFT circuit's discriminator crossover frequency).

Under the conditions where the transistor **376** is biased out of conduction, no voltage develops across the resistor **390** which will cause the transistor **314** to be biased into conduction. If, at this time, the junction **366** is periodically decreasing to ground potential the transistor **314** will periodically become nonconductive and a positive voltage can periodically develop at the collector electrode of the transistor **314** when the transistor **316** is conductive.

The transistor **316** will become conductive when a transistor **392** is biased into conduction. The transistor **392** has its base electrode coupled via a resistor **394** and a 9.1 volt Zener diode **396** to a terminal **398**. The terminal **398** is coupled to the automatic gain control circuits **44**. In the CTC–40 series chassis, as shown in the Television Service Data, supra, the terminal **398** may conveniently be connected to terminal **303** on the PW 300 circuit board. When an automatic gain

control voltage develops and is applied at the terminal **398**, (which for the CTC–40 chassis ranges from approximately +9.5 volts to +16 volts as the incoming UHF television signal voltage varies from a weak to strong signal) the voltage in excess of the 9.1 volt Zener diode voltage drop will be applied to the base electrode of the transistor **392**. A filter is provided by a capacitor **400** and a resistor **402** to prevent kine arcs which may develop at the terminal **398** from biasing the transistor **392** into conduction. The emitter electrode of the transistor **392** is connected to a terminal **404** by an inductor **406**. The inductor **406** in conjunction with a capacitor **408** provides protection against kine arc voltages which may develop in the system.

Terminal **404** is connected to a potentiometer **410** such that the bias applied to the emitter electrode of the transistor **392** may be adjusted to change the level of voltage at the base electrode required to cause the transistor **392** to become conductive. This in effect provides an adjustment for the level of automatic gain control voltage at the terminal **398** which is required to bias the transistor **392** into conduction. Since the AGC voltage increases with stronger incoming UHF television SIGNALS, it permits the viewer to prevent the transistor **392** from conducting when a weak TV signal is present. Thus, as the viewer sets increasing voltages at the emitter electrode of the transistor **392**, it will be biased off except for stronger incoming UHF signals which produce a large AGC output voltage at the terminal **398**. In this manner, the viewer can adjust the system to bypass weak signal UHF transmission during the searching operation by preventing the AGC input to the AND gate.

It should be noted that the preselector and oscillator tunable resonant circuits of the UHF tuner **12** are simultaneously varied in tracking relation such that a predetermined frequency difference (the IF frequency) is maintained between the resonant frequency of the preselector and the oscillator tunable resonant circuits. The oscillator component values are selected so that the oscillator tunable resonant circuit is resonant above the preselector circuit by the IF frequency for any given tuner shaft position. Since the preselector circuit attenuates signals outside of its band-pass UHF TV signals located above the oscillator resonant frequency are attenuated.

Typically, UHF tuner preselector circuits provide an attenuation of signals outside its bandpass in the order of 40 to 50 decibels. The attenuation of these signals prevents the signal seeking circuitry from stopping on the image signal as it searches across the UHF TV frequency band. Moreover, the sensitivity adjustment as previously mentioned provides a level setting for incoming UHF TV signal strength necessary to stop the search system. Consequently, the viewer can adjust the sensitivity setting (potentiometer **410**) such that received image signals, as attenuated by the preselector stage, are of insufficient strength to cause the signal seeking system to stop.

When the transistor **392** becomes conductive the current flowing through the resistor **412** turns on transistor **316**. If the three previously mentioned criteria necessary to enable the AND gate (transistors **314** and **316**) simultaneously occur, positive pulses develop at the collector electrode of the transistor **314** which are coupled through the diode **320** to the terminal **206**. The first of these series of positive pulses causes the multivibrator to switch states so that the transistor **208** becomes conductive and remains conductive. The decreased voltage at the collector electrode of the transistor **208** is coupled via the resistor **220** and lead **222** to the base electrode of the transistor **82** causing it to become nonconductive and causing the actuated one of the motor switches **64** and **66** to become open thereby stopping the bidirectional AC motor **20** with the UHF tuner tuned for reception of the incoming UHF television signal detected by the signal sensing circuit **56**. Loss of one or more of the three criteria caused, for example, by fading of the UHF TV signal, will not result in a reenergization of the motor windings since it is only the first positive pulse at the junction **206** which causes the actuated one of the motor switches **64** and **66** to become open.

What is claimed is:

1. A signal seeking tuning system for a television receiver of the type including tuning circuits adjustable to tune said television receiver for any channel in a television frequency band, and circuitry responsive to pulses related to the synchronizing pulses of a received television signal, comprising:

control circuitry actuatable to cause said tuning circuits to tune over said television frequency band and responsive to a pulse control signal to stop the tuning of said tuning circuits when a television signal is received;

switch means coupled to said television receiver for receiving said pulses related to the synchronizing pulses and switching between a first and a second conductivity condition in response thereto;

means coupled to said television receiver for receiving and integrating said pulses related to said synchronizing pulses for developing said pulse control signal;

at the first switching of said switch means from said first to said second conductivity condition after a predetermined number of said synchronizing pulses have occurred and

means for applying said pulse control signal to said control circuitry for controlling the tuning of said tuning circuits.

2. A signal seeking system as defined in claim **1** wherein the receiving and integrating means coupled to said television receiver develops a train of pulse control signals and said control circuitry is responsive to the first pulse control signal of said train of pulses to stop the tuning of said tuning circuits.

3. A signal seeking system as defined in claim wherein said means coupled to said television receiver includes means providing a uniform pulse output signal in response to each individual synchronizing pulse and operably connected so that each pulse control signal developed has a uniform amplitude and duration.

4. A signal seeking system as defined in claim **3** wherein said synchronizing pulses are horizontal synchronizing pulses.

5. A signal seeking tuning system as defined in claim **3** wherein said means coupled to said television receiver includes a tuned circuit resonant at a predetermined frequency and a diode coupled between said tuned circuit and a point of reference potential to provide peaking and shaping of detected synchronizing pulses.

6. A signal seeking system as defined in claim **5** wherein said tuned circuit is resonant at a frequency slightly above the frequency of said synchronizing pulses.

7. A system as defined in claim **6** wherein said synchronizing pulses are horizontal synchronizing pulses.

8. A signal seeking tuning system for a television receiver of the type including tuning circuits adjustable to tune said television receiver for any channel in a television frequency band, and circuitry responsive to the synchronizing pulses of a received television signal, comprising:

a first and a second series connected device, each of said devices connected to be biased in a given conductivity condition and switchable to another conductivity condition;

circuit means for applying said synchronizing pulses to said first device to change its conductivity at a predetermined repetition rate from said given to said other conductivity condition in response to individual synchronizing pulses;

integrating circuit means for applying said synchronizing pulses to said second device to change its conductivity from said given to said other conductivity condition after a predetermined number of pulses have occurred, said second device remaining in said other conductivity condition where synchronizing pulses continue to be applied to said second device after said predetermined number of pulses have occurred; and

control circuitry actuatable to cause said tuning circuits to tune over said television frequency band and responsive to the change in conductivity of both said first and said second device to said other conductivity condition to stop the tuning.

9. A signal seeking system as defined in claim **8** wherein said control circuitry is responsive to the first occurrence where

both said first and said second device change in conductivity from said given to said other conductivity condition.

10. A signal seeking system as defined in claim 8 wherein said first and said second device are transistors having their emitter-collector electrode current paths connected in series.

11. A signal seeking system as defined in claim 8 including means providing a uniform pulse output signal in response to each individual synchronizing pulse.

12. A signal seeking system as defined in claim 11 wherein said synchronizing pulses are horizontal synchronizing pulses.

13. A signal seeking system as defined in claim 11 including a tuned circuit resonant at a frequency slightly above the frequency of said synchronizing pulses and a diode coupled between said tuned circuit and a point of reference potential to provide peaking and shaping of detected horizontal synchronizing pulses.

14. A signal seeking system as defined in claim 13 wherein said synchronizing pulses are horizontal synchronizing pulses.

15. A signal seeking tuning system for a television receiver of the type including tuning circuits adjustable to tune said television receiver for any given channel in a television frequency band, and circuitry responsive to horizontal synchronizing pulses of the received television signal, comprising:

a first and a second transistor each having a collector, an emitter and a base electrode, said transistors connected with their collector-emitter current paths connected in series between a source of operating potential and a fixed reference potential;

circuit means for processing detected horizontal synchronizing pulses to provide a uniform output pulse for each horizontal synchronizing pulse detected coupled between a source of horizontal synchronizing pulses and the base electrode of said first transistor to periodically bias the collector-emitter current path of said first transistor for conduction in response to each individual horizontal synchronizing pulse detected;

capacitance means coupled between the base electrode and one of the other electrodes of said second transistor, said capacitance means further connected to said circuit means such that the collector-emitter electrode current path of said second transistor is biased for conduction after a predetermined number of said uniform output pulses have been provided by said circuit means; and

control circuitry adjustable to cause said tuning circuits to tune over said television frequency band operable when the collector-emitter current paths of said first and said second transistors are biased for conduction to stop the tuning.

16. A signal seeking system as defined in claim 15 wherein said control circuitry is responsive to the first occurrence where the collector-emitter current path of both said first and said second transistor are biased for conduction.

UNITED STATES PATENT OFFICE

CERTIFICATE OF CORRECTION

Patent No. 3,610,817 Dated October 5, 1971

Inventor(s) Thomas Austin Bridgewater

It is certified that error appears in the above-identified patent and that said Letters Patent are hereby corrected as shown below:

In Column 2, line 21, after "demodulation" insert -- and audio amplifier stage 32 before application to a --. In Column 7, line 57, delete "returning" and substitute -- retuning --. In Column 11, line 22, delete "SIGNALS" and substitute -- signals --. In Column 12, line 29, after "claim" insert -- 1 --.

Signed and sealed this 4th day of April 1972.

(SEAL)
Attest:

EDWARD M.FLETCHER,JR.
Attesting Officer

ROBERT GOTTSCHALK
Commissioner of Patents

USCOMM-DC 60376-P69
U.S. GOVERNMENT PRINTING OFFICE : 1969 O—366-334