H. JONES.

MOLD FOR BRAKE SHOES.

APPLICATION FILED JUNE 25, 1915.

1,172,363.

Patented Feb. 22, 1916.

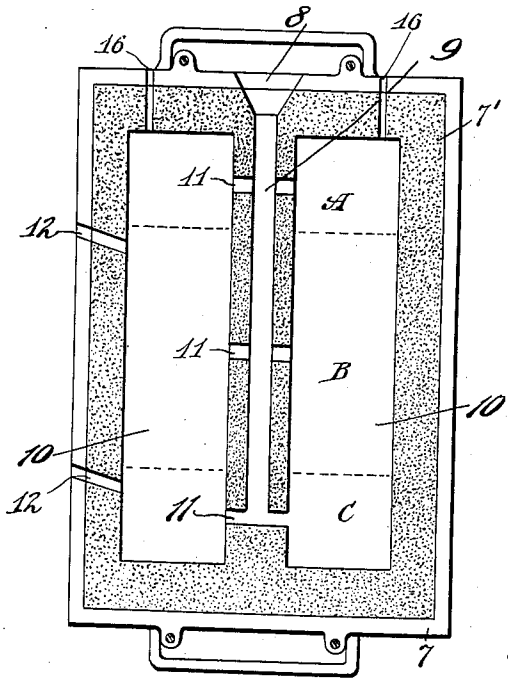

Fig. 1.

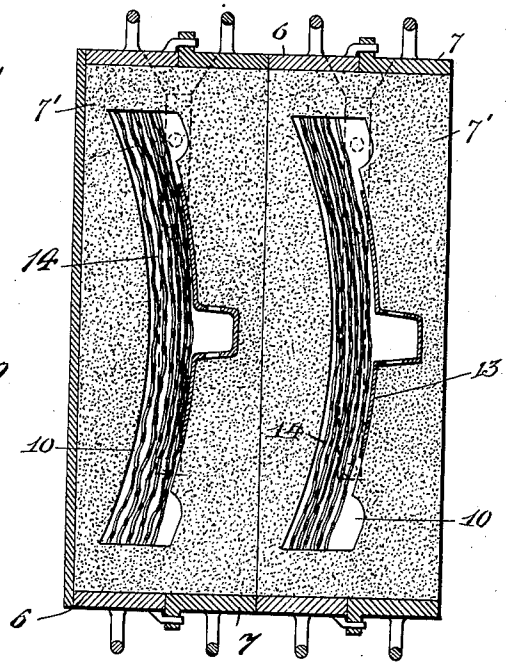

Fig. 2.

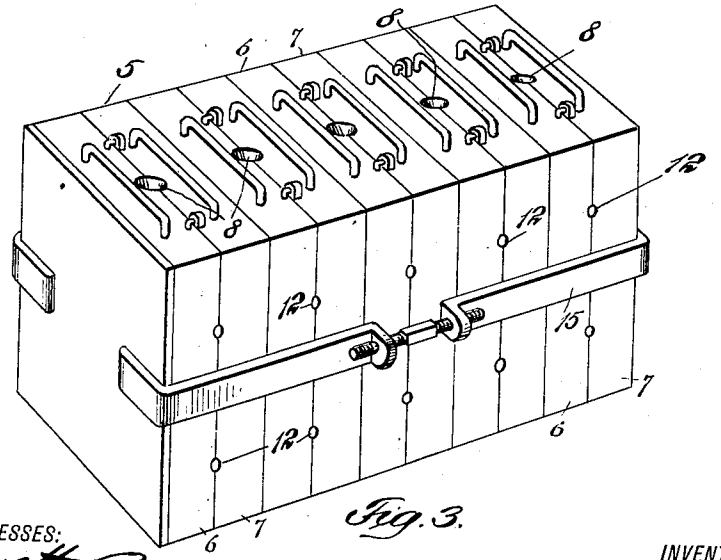

Fig. 3.

WITNESSES:

John Cook

INVENTOR

Harry Jones

BY

George Cook & Sons

ATTORNEYS

UNITED STATES PATENT OFFICE.

HARRY JONES, OF SUFFERN, NEW YORK, ASSIGNOR TO AMERICAN BRAKE SHOE & FOUNDRY COMPANY, OF MAHWAH, NEW JERSEY, A CORPORATION OF NEW JERSEY.

MOLD FOR BRAKE-SHOES.

1,172,363. Specification of Letters Patent. Patented Feb. 22, 1916.

Application filed June 25, 1915. Serial No. 36,172.

To all whom it may concern:

Be it known that I, HARRY JONES, a citizen of the United States, and a resident of Suffern, in the county of Rockland and State of New York, have made and invented certain new and useful Improvements in Molds for Brake-Shoes, of which the following is a specification.

This invention relates to a mold for the casting of sectional brake shoes, the object being to provide an article of the above-mentioned character wherein the rapid and efficient casting of sectional shoes may be accomplished.

A further object is to provide a mold for the casting of sectional brake shoes which is so arranged that the height or length of each section is automatically determined, so that a uniform product results.

A further object is to provide a mold for the casting of sectional brake shoes wherein the actual molding operations are reduced to a minimum, the mold being so arranged and designed that the body of the shoe is built up in a step by step manner, allowing the sections to be formed of different metals, so that the resulting shoes will embody in a high degree, wearing and frictional qualities.

A further object is to provide a mold for the casting of brake shoes of that type which include a bundle of expanded or openwork metal, with the inlet ports within the mold so arranged that the tendency for the molten metal to cool and set by contact with the bundle of openwork or expanded metal prior to the complete formation of the shoe, is eliminated, and at the same time the openwork metal is protected from the inflowing and highly heated metal, which would ordinarily tend to burn and fuse the same if directly exposed to the incoming metal for any considerable time.

Other objects and advantages will appear as the description proceeds, wherein it is to be understood that changes in the precise embodiment of the invention can be made within the scope of what is claimed, without departing from the spirit thereof.

The preferred embodiment of my invention is disclosed in the accompanying drawings, wherein:—

Figure 1 is a view in front elevation of one section of the mold; Fig. 2 is a view in side section of two molds arranged side by side, the one being a counterpart of the other, and having contained within the shoe cavities suitable reinforcing backs and binding or reinforcing members; Fig. 3 is a view in perspective of a battery of molds, securely clamped together, and illustrating the manner in which a large number of shoes may be simultaneously cast.

Referring specifically to the several views, the mold includes the usual cope 6 and drag 7, and in which the sand or body 7′ of the mold is rammed and packed. The body of the mold is provided with the shoe cavity 10, the same being arranged on end, that is, with the longitudinal axis thereof extending substantially vertical, and alongside of which extends a duct 9. For economical reasons, the mold is preferably provided with two shoe cavities between which the said central duct 9 extends. A gate 8 is provided in the top wall of the mold and communicates with the duct 9, and suitable inlet ports 11 extend between, and communicate with, the said duct and the shoe cavities. These inlet ports 11 correspond in number with, and determine, the number of sections the completed shoe is to contain, and are arranged approximately central or midway of the height of the sections to which they correspond.

Leading from the shoe cavities 10, are the overflow ports 12 which extend upwardly and outwardly through the sides of the mold and determine the height or length of each section of the completed shoe. The uppermost portion of each shoe cavity is not provided with such overflow ports, as the top of the central duct 9 acts in this capacity, and is supplemented by the gas outlets 16, the latter extending through the top of the molds and providing for the escapement of gases from within the shoe cavities.

The overflow ports 12 divide each shoe cavity into a plurality of continuous compartments A—B—C—, corresponding in number and size to the sections of the completed shoe, and each of which compartments is provided with inlet and outlet ports, the inlet port of the uppermost compartment acting also as the outlet or overflow port. In the casting of brake shoes in

the mold as thus constructed, a reinforcing back 13 and a binding member of expanded or openwork metal are placed within the shoe cavities, so that as the molten metal is poured therein it flows about, and becomes securely anchored to, the reinforcing back and binding member. In practice, a number of such molds are rigidly bound together by clamps 15, forming a battery of molds and allowing the shoes to be cast in bulk, so as to materially reduce the cost of each shoe. The central duct 9 is of considerable diameter, so that the molten metal flows to the lowermost of the exposed inlet ports 11, and from thence into the shoe cavities. The inflowing and highly heated molten metal tends to burn and fuse that portion of the bundle of expanded or openwork metal which is positioned directly in front of the inlet ports 11. This burning or fusing of the bundle of openwork metal would be reduced to a minimum by arranging the inlet ports at the bottom of each compartment, so that the molten metal quickly rises above and protects the same against direct contact with the inflowing metal. This practice, however, is open to the objection that the molten metal as it rises within the shoe cavity is cooled by contact with the reinforcing or binding member 14, and is likely to harden or set prior to the completion of the shoe section. By arranging the inlet ports substantially central of the compartment to which they correspond, a sound casting is produced without excessive burning or fusing of the openwork or expanded metal. As the molten metal rises within the shoe cavities, it eventually reaches and flows from the lowermost of the overflow ports 12, indicating that the lowermost of the compartments of the shoe cavities has been filled, and the pouring of the metal is accordingly discontinued until such time as the metal within the upwardly and outwardly extending overflow port has set and hardened, which effects the closing and stoppage thereof. The next, and superimposed section, of the shoe may then be cast, and in this manner the body of the shoe is built up, the metal which forms each section being allowed to cool and set prior to the casting of the next adjacent and superimposed section, so that the resulting shoe is formed of a number of isolated sections securely anchored to a common support, and throughout which extends a binding or reinforcing member of openwork metal.

The mold is thus particularly adapted for the casting of brake shoes the bodies of which are to be made up of slightly separated sections and formed of different metals which possess such characteristics as to hardness and softness so that the shoe will be formed with a composite wearing body, combining in a high degree wearing and frictional qualities. The number of compartments the shoe cavity is to contain may be varied as desired, according to the required number of sections the completed shoe is to possess, and it is to be also understood that the mold, as above outlined, may be used for the casting of articles other than brake shoes, but is particularly efficient when put to such use.

What I claim is:—

1. A brake shoe mold with the shoe cavity arranged on end, said cavity having an inlet port and a plurality of overflow ports arranged at successive heights.

2. A brake shoe mold with the shoe cavity arranged on end, and with a plurality of inlet and outlet ports communicating at successive heights with said cavity and with said inlet ports arranged substantially central of the section of the cavity to which they correspond.

3. A brake shoe mold with the shoe cavity arranged on end, and having an inlet port communicating therewith having a plurality of overflow ports communicating at successive heights with said cavity and dividing the same into a number of continuous compartments.

4. A brake shoe mold with the shoe cavity arranged on end, and having a plurality of overflow ports communicating at successive heights with said cavity and dividing the same into a number of continuous compartments, said mold having inlet ports communicating with each of said compartments.

5. A brake shoe mold with the shoe cavity arranged on end, and having a plurality of overflow ports communicating at successive heights with said cavity and dividing the same into a number of continuous compartments, said mold having inlet ports communicating with substantially the central portion of each of said compartments.

6. A brake shoe mold with the shoe cavity arranged on end, and having a plurality of upwardly and outwardly extending overflow ports communicating at successive heights with said cavity, dividing said mold into a plurality of continuous compartments, said mold having a plurality of inlet ports communicating with said cavity and located substantially central of each compartment to which they correspond.

7. A mold having a cavity therein, an inlet port communicating therewith and provided with a plurality of overflow ports communicating with said cavity and arranged at successive heights.

8. A mold having a cavity therein and provided with a plurality of overflow ports communicating at successive heights with said cavity and dividing the same into a number of continuous compartments, said mold having inlet ports communicating with each of said compartments.

9. A mold having a cavity therein, an inlet port communicating with said cavity, said mold provided with a plurality of upwardly and outwardly inclined overflow ports communicating at successive heights with said cavity.

Signed at Suffern in the county of Rockland and State of New York this 23rd day of June A. D. 1915.

HARRY JONES.

Witnesses:
GEORGE F. SMITH,
CLIFFORD ARMITAGE.