(No Model.) 2 Sheets—Sheet 1.

G. W. WRIGHT.

DOOR CHECK.

No. 590,052. Patented Sept. 14, 1897.

Fig 1

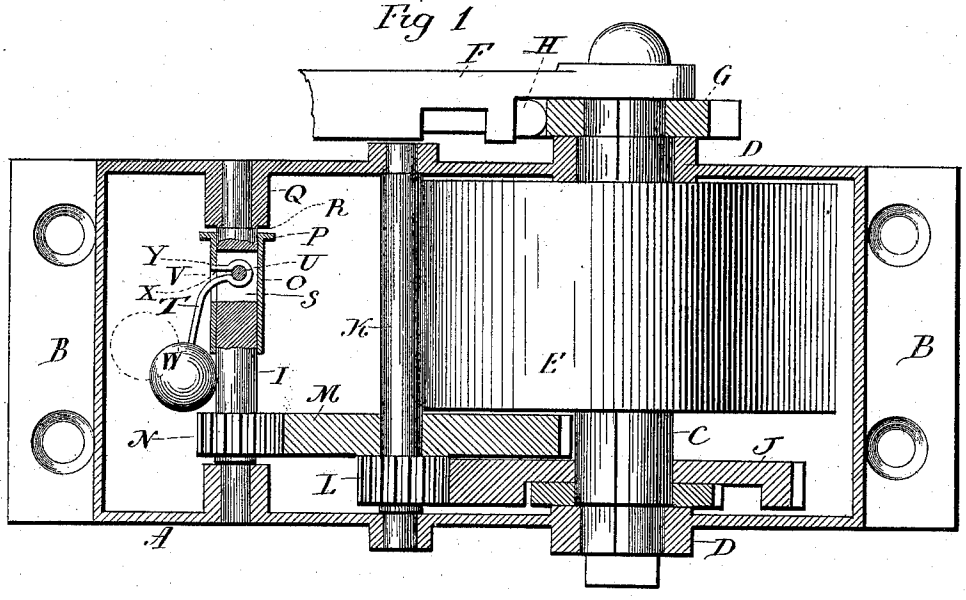

Fig. 2

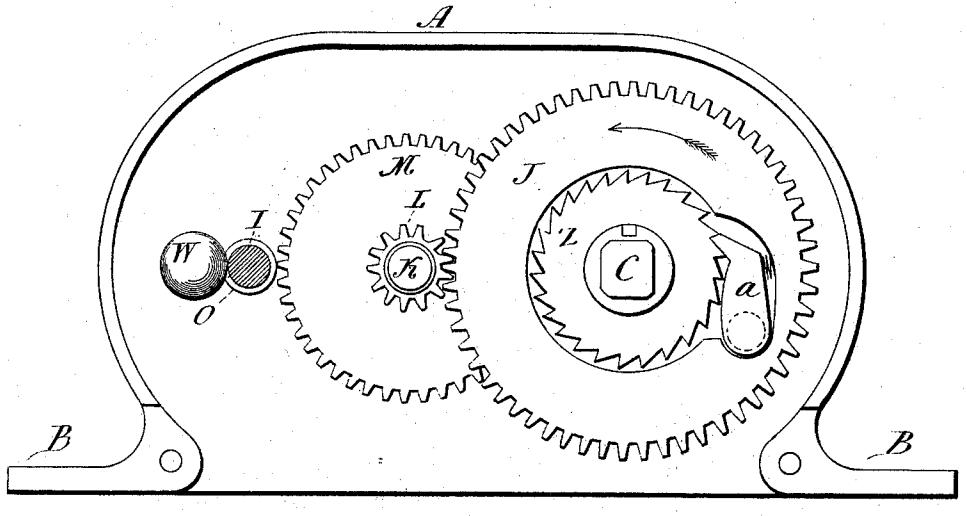

Witnesses
J. H. Shumway
Lillian D. Kelsey

Granville W. Wright
Inventor
By Attys
Earle & Symons

THE NORRIS PETERS CO., PHOTO-LITHO., WASHINGTON, D. C.

(No Model.) 2 Sheets—Sheet 2.

G. W. WRIGHT.

DOOR CHECK.

No. 590,052. Patented Sept. 14, 1897.

Fig 3

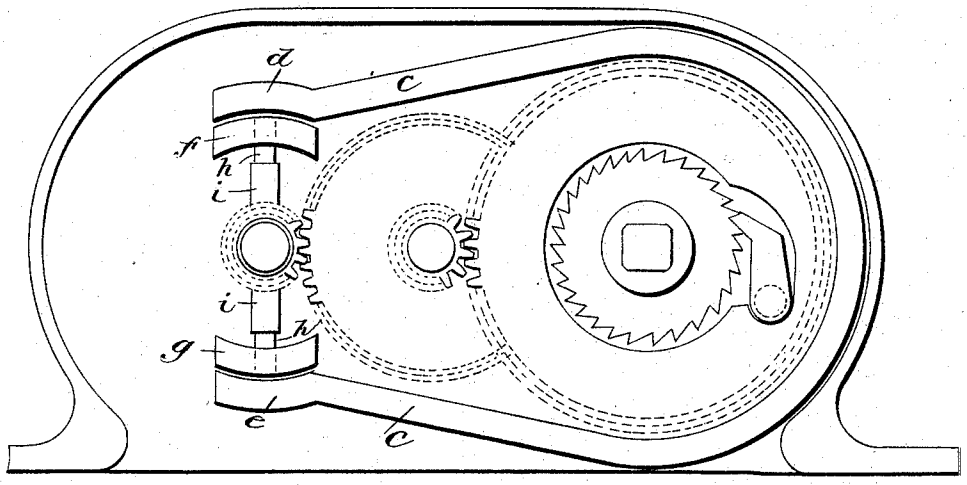

Fig 4

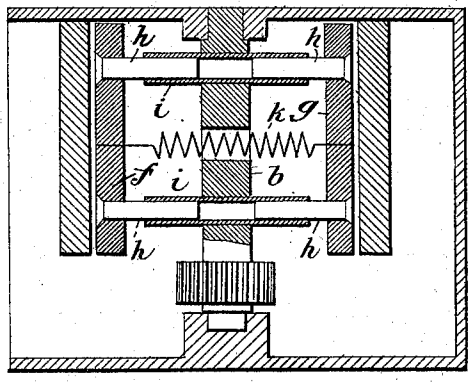

Witnesses
J. H. Shumway
Lillian D. Kelsey

Granville W. Wright
Inventor
By Attys
Earle Lyman

THE NORRIS PETERS CO., PHOTO-LITHO., WASHINGTON, D. C.

UNITED STATES PATENT OFFICE.

GRANVILLE W. WRIGHT, OF NEW HAVEN, CONNECTICUT, ASSIGNOR TO THE SARGENT & COMPANY, OF SAME PLACE.

DOOR-CHECK.

SPECIFICATION forming part of Letters Patent No. 590,052, dated September 14, 1897.

Application filed July 5, 1892. Serial No. 438,942. (No model.)

To all whom it may concern:

Be it known that I, GRANVILLE W. WRIGHT, of New Haven, in the county of New Haven and State of Connecticut, have invented a new Improvement in Door-Checks; and I do hereby declare the following, when taken in connection with accompanying drawings and the letters of reference marked thereon, to be a full, clear, and exact description of the same, and which said drawings constitute part of this specification, and represent, in—

Figure 1, a longitudinal central section of the case, showing parts of the mechanism in side view and partial section; Fig. 2, an under side view, the bottom of the case removed and parts broken away to show the mechanism. Figs. 3 and 4 illustrate modifications.

This invention relates to an improvement in devices to operate in opposition to the spring or other power applied to close the door to so resist the closing action that while the force applied is permitted to exert itself the resistance will cause the closing movement of the door to be so slow as to prevent slamming, the invention being for an improvement in that class of mechanical checks which are specially adapted for employment in connection with a volute spring, and in which the check may be combined within the same case as the volute spring, the object of the invention being to provide a check which is adapted to automatically increase or diminish the resistance to the closing of the door accordingly as the closing movement of the door is faster or slower, the invention, however, being adapted for use on a door in which the force applied for closing the door may be a structure independent of the check; and the invention consists in the construction as hereinafter described, and particularly recited in the claims.

A represents the case, which is provided with suitable lugs or flanges B, by which it may be secured to the lintel, or wherever it may be desired. Within the case a vertical principal shaft C is arranged and supported in the top and bottom of the case in bearings D D, provided for the purpose, and so as to permit the shaft to be rotated. Within the case the steel volute spring E is arranged in the usual manner, the outer end of the spring being connected with the case and the inner end of the spring connected with the shaft, and so that as the shaft is rotated in one direction it will wind the spring. Then when free the reaction of the spring will impart rotation to the shaft in the opposite direction. At one end of the shaft, outside the case, a lever F is applied which is to be connected with the door in the usual manner, so that the opening of the door will turn the shaft in one direction to wind the spring, and so that the reaction of the spring will be communicated through the lever to close the door. As represented, this shaft is provided with a ratchet-wheel G, and the lever provided with a suitable pawl or bolt H, by which the lever may be coupled to the shaft, so that the spring may be wound to the required tension, and then engagement be made between the lever and the shaft in the usual and well-known manner not necessary to be particularly illustrated. For this connection of the door with the shaft any of the known devices may be substituted.

Within the case and at one side of the principal shaft a second vertical shaft I is arranged, its axis parallel with the axis of the principal shaft C, and the said second shaft is in gear connection with the principal shaft, so that a partial rotation of the principal shaft, as in the closing movement of the door, will impart a rapid revolution to the said second shaft.

As here represented the gear connection is produced by a gear-wheel J, preferably loose on the principal shaft C, but so as to be engaged with the shaft in the closing movement of the door. Between the principal shaft C and the shaft I an intermediate vertical shaft K is arranged, which carries a pinion L, into which the gear J works, and the shaft K also carries the gear-wheel M, which works into a pinion N on the shaft I. The difference in diameters of the gears and pinions is so great that the slow movement of the principal shaft produced in the closing movement of the door will impart rapid revolution to the shaft I.

In my invention to resist the rapid closing of the door under the action of the force applied thereto I introduce or combine with the rapidly-revolving shaft a device which will

normally offer substantially no resistance to the revolution of the shaft, but as the shaft revolves the said device comes into action to offer a resistance to the revolution of that shaft, and which resistance will gradually increase as the rapidity of revolution of the shaft increases, thereby increasing the resistance as the closing movement of the door is made more rapid, the said resistance being adapted to yield as the closing movement of the door is slower or decreases, and whereby the resistance to the closing of the door will be automatically regulated with relation to the velocity of movement of the door in closing.

As an illustration of a practical device to thus automatically act to increase or reduce the resistance accordingly as the movement of the door is more or less rapid, in Fig. 1 a tubular sleeve O is arranged upon the shaft I and so as to slide freely up and down. This sleeve is constructed with an annular flange P at its upper end, and around the bearing Q, in which the shaft I is supported, an annular plain surface R is formed corresponding to the adjacent plain surface of the flange P of the sleeve O. The sleeve is adapted to revolve with the shaft, but, as before stated, is free to slide up and down. It normally stands with the face of the flange slightly distant from or without substantial frictional contact with the stationary surface R. The shaft inside the sleeve is constructed with a vertical mortise S, and in this mortise an arm T is hung upon a pivot U, which extends transversely through the mortise, and so that the arm is adapted to swing in a vertical plane—that is, in substantially the plane of the axis of the shaft I. The sleeve is constructed with a slot V, through which the arm may pass. This arm makes an engagement between the shaft and the sleeve, so as to insure the revolution of the sleeve with the shaft, the slot V in the sleeve permitting the up-and-down movement of the sleeve. The arm T carries at its outer or free end a weight or ball W, which normally brings the arm to its down position, as seen in Fig. 1, when the shaft is at rest, but as the shaft revolves the centrifugal force will cause the ball to swing away from the shaft, as indicated in broken lines, Fig. 1. The arm T is constructed with a shoulder or projection X, which is adapted to bear against the upper end Y of the slot W, as seen in Fig. 1, and so that as the ball swings outward the shoulder or projection X will operate as a cam upon the sleeve, tending to force that sleeve upward, and so as to bring the flange P into bearing contact with the adjacent stationary surface R, and so as to produce frictional contact between the revolving flange P and the said adjacent stationary surface R. This friction will vary accordingly as the velocity of the shaft I is greater or less, increasing as the velocity is greater, because the force of the outwardly-swinging ball is greater, but as the velocity slackens the ball will drop or tend to drop and so as to relieve the friction to the extent of this tendency.

In operation if the movement of the door be rapid then the pressure of the sleeve against the stationary surface R is greater than when the closing movement of the door is slower. The operation of this device is therefore to more strongly check the door as its closing velocity is greater, and as that closing velocity reduces the resistance will correspondingly reduce, and therefore the closing movement of the door will be substantially the same under all circumstances, irrespective of accidental or incidental influences which may be brought upon it, such as a force which is given to the door by a person passing through it or a draft which would tend to increase the velocity of the closing movement. Again, the resistance of the check will automatically diminish according as an accidental or incidental resistance is offered to the closing movement of the door. This may be by the same influences above referred to as increasing the velocity of the closing movement.

As a means for engaging and disengaging the gear J from the principal or operating shaft C a ratchet-wheel Z is rigidly attached to the shaft, and on the wheel J a spring-pawl *a* is hung, adapted to engage the ratchet in the closing movement of the door, that movement being indicated by the arrow, and so as to escape therefrom in the opening movement of the door. This disconnection of the gear-wheel J from the shaft in the opening movement is desirable in order that the checking appliances may not operate during the opening movement of the door. The ratchet-and-pawl arrangement shown is one of the many known mechanical devices for coupling a shaft with the wheel in one direction and leaving it free in the opposite direction, and for which any of such known devices may be substituted.

Other devices to thus operate to automatically regulate the closing movement of the door may be employed—as, for illustration, a magnet with a revolving armature. Such a device is shown in Figs. 3 and 4. In this illustration the same mechanism is shown so far as the train of gearing and the rapidly-revolving shaft are concerned. In Figs. 3 and 4, *b* represents the rapidly-revolving shaft. Within the case a stationary horseshoe-magnet *c* is arranged, its arms terminating in two poles *d e* on opposite sides of the shaft *b* and equidistant therefrom. These poles preferably present toward the shaft a surface substantially concentric with the axis of said shaft. On the shaft *b* an armature is arranged which will revolve with the shaft and between the two poles of the magnet. As here represented, the armature is composed of two cheeks *f* and *g*, each provided with two guiding-spindles *h*, which slide into corresponding radial tubular arms *i*, projecting from the shaft *b*, and so as to permit the armatures to move outward and inward as occasion may

require. The two cheeks are connected by a spring *k*, the tendency of which is to draw the cheeks toward the shaft, yet allow the cheeks to move outward under centrifugal force produced by rapid revolution of the shaft *b*, which carries the cheeks. The armature thus constructed may revolve between the two poles of the magnet without contact therewith, the springs normally holding the cheeks of the armature at a slight distance from the poles, as shown.

The attractive force of the magnet operates to draw the armature toward its poles, and thereby resist the passage of the armature from the poles.

In the opening movement of the door rapid revolution is communicated to the shaft *b*, as before described, and to the armature which it carries, and so that the armature will revolve between the two poles of the magnet, such revolution being resisted by the attractive power of the magnet tends to arrest the revolution of the shaft each time the armature is brought into line with the poles. The resistance to the revolution of the shaft *b* thus produced by the magnet and armature operates against the closing force applied to the door and so as to resist the closing force to such an extent that the closing movement must be comparatively slow, and so slow that the door will close easily and thereby prevent slamming.

By arranging the armatures so that they may move outward and inward, as described, the tendency of centrifugal force is to throw the cheeks outward and into nearer engagement with the magnets, thereby correspondingly increasing the resistance which the magnet offers to the revolution of the armature—that is to say, the nearer the armature approaches the magnets the greater will be the resistance. The power of the spring is adjusted with relation to the centrifugal force produced.

The centrifugal force operates upon the armature substantially the same as it does upon the ball in the first illustration, and from such outward movement of the armature or cheeks the resistance is increased. Consequently the influences which are brought to bear upon the door, as in the first illustration, to increase or reduce the velocity of the closing movement of the door will be met by a corresponding automatic increase or decrease of resistance from the checking device.

In either case the checking device may be employed with a spring independently applied, the door having the connection with the principal shaft, as described, and the same as if the spring were in direct connection therewith, and so that the closing movement of the door will impart the required rapid revolution to the shaft to bring the check into operation.

No claim is made in this application to the employment of the magnet as a check, that device constituting the subject of an independent application.

I claim—

1. In a door-check, the combination with a main shaft connected with the door so as to be actuated in one direction or the other by the opening and closing movement thereof, of a secondary shaft, connection between the said main and secondary shafts whereby the actuation of the former communicates rapid rotary movement to the latter, a retarding device mounted upon the said secondary shaft so as to revolve therewith, and adapted to move outward under the centrifugal force developed by the rapid rotation thereof, and means stationarily located within the range of movement of the said device for coacting therewith to retard its revolution and hence that of the secondary and main shafts, substantially as described.

2. A door-check consisting of a principal shaft with connection therefrom to the door, and so that a corresponding rotative movement is imparted to the said principal shaft by the opening and closing movement of the door, a second shaft in gear connection with said principal shaft, and whereby the rotative movement imparted to the principal shaft will communicate rapid revolution to the said second shaft, a sleeve arranged on said second shaft, arranged to revolve therewith, but adapted for longitudinal movement thereon, an arm hung in said shaft so as to revolve therewith but so as to swing in substantially the plane of the axis of the shaft, and whereby the revolution of the shaft will by centrifugal force impart an outward swinging movement to said arm, the said arm in connection with said sleeve whereby the swinging movement of the arm will communicate to said sleeve a longitudinal movement upon the shaft, a stationary bearing-surface adapted to engage a corresponding surface of the said sleeve as the said sleeve is moved by said centrifugal force, substantially as and for the purpose described.

In testimony whereof I have signed this specification in the presence of two subscribing witnesses.

GRANVILLE W. WRIGHT.

Witnesses:
WILLIAM S. COOKE,
CHAS. L. BALDWIN.