United States Patent

[11] 3,599,063

[72] Inventors **Sadaaki Nanai;**
Nobuhiro Kyura, both of Fukuoka-ken, Japan

[21] Appl. No. **851,945**
[22] Filed **Aug. 21, 1969**
[45] Patented **Aug. 10, 1971**
[73] Assignee **Kabushiki Kaisha Yaskawa Denki Seisakusho**
Fukoka-ken, Japan

[54] **SPEED CONTROL SYSTEM FOR D.C. MOTOR**
7 Claims, 13 Drawing Figs.

[52] **U.S. Cl.** **318/327,** 318/332, 318/398
[51] **Int. Cl.** **H02p 5/16**
[50] **Field of Search** 318/326, 329, 397, 398, 331, 332, 327

[56] **References Cited**

UNITED STATES PATENTS

3,284,688	11/1966	Black	318/326
3,383,578	5/1968	Lewis	318/326
3,458,791	7/1969	Boice	318/327

Primary Examiner—Oris L. Rader
Assistant Examiner—Thomas Langer
Attorney—Ward, McElhannon, Brooks and Fitzpatrick

ABSTRACT: A control system is composed of a saturation amplifier delivering a positive or negative saturated voltage depending on the sign of a difference voltage between a command voltage and a negatively fed back speed-representing voltage of the motor to be controlled, a proportional and integrating amplifier receiving a difference voltage between the output of the saturation amplifier and a negatively fed back voltage representing the actual armature current through the motor as its input, and a power amplifier amplifying the output of the second amplifier for supplying the armature current for the motor. In other aspects of the invention, the first amplifier may be replaced by another proportional and integrating amplifier cooperating with a circuit portion prohibiting the integrating operation depending on the output of the replacing amplifier, or the power amplifier may be replaced by a DC current switching circuit employing an amplitude modulated pulse signal for switching the armature current of the motor as desired.

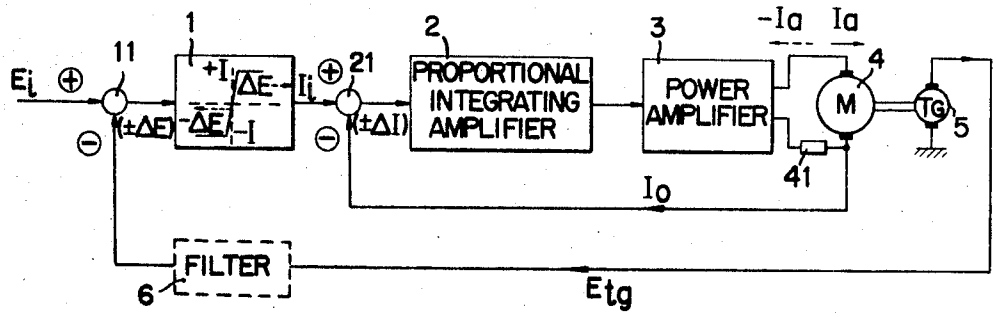

FIG. 2

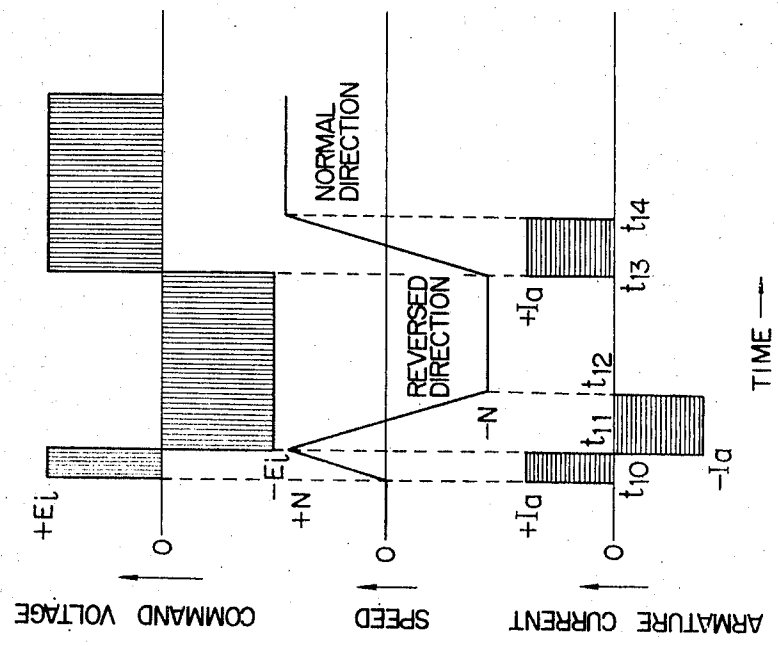
NORMAL DIRECTION
REVERSED DIRECTION
+Ei
-Ei
+N
-N
+Ia
-Ia
0
t10 t11 t12 t13 t14
TIME
COMMAND VOLTAGE
SPEED
ARMATURE CURRENT

FIG. 1

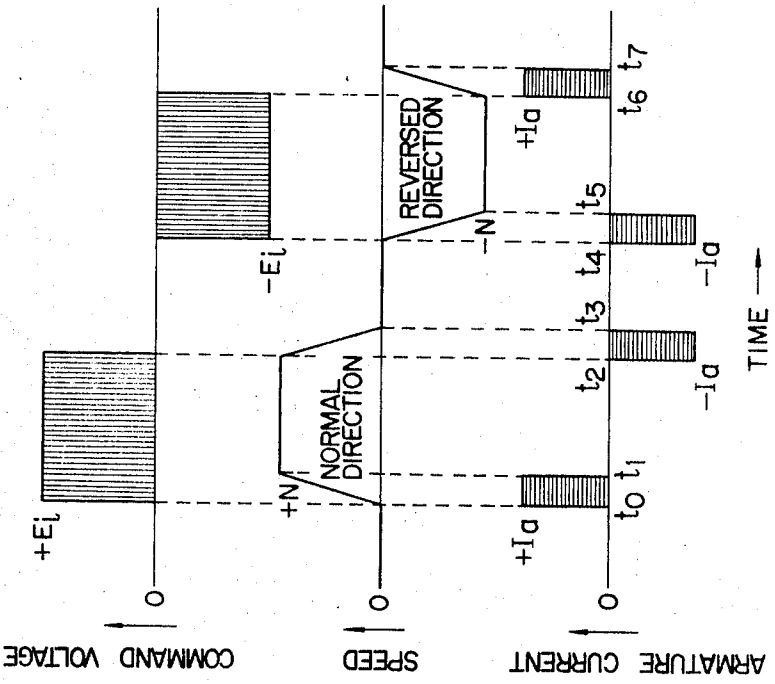
REVERSED DIRECTION
NORMAL DIRECTION
+Ei
-Ei
+N
-N
+Ia
-Ia
0
t0 t1 t2 t3 t4 t5 t6 t7
TIME
COMMAND VOLTAGE
SPEED
ARMATURE CURRENT

FIG. 3

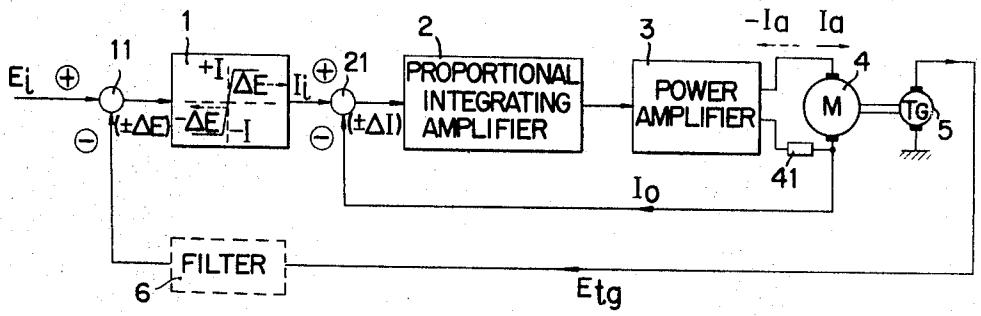

FIG. 5

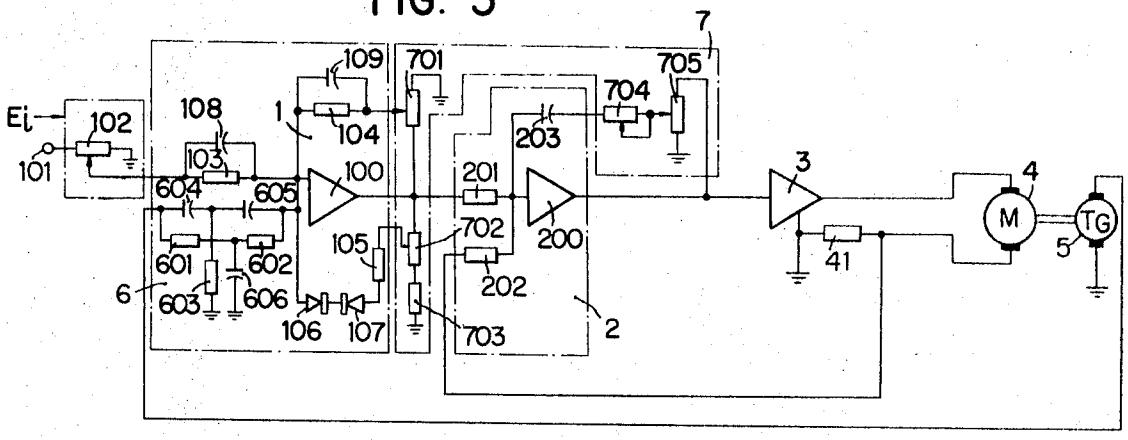

FIG. 8

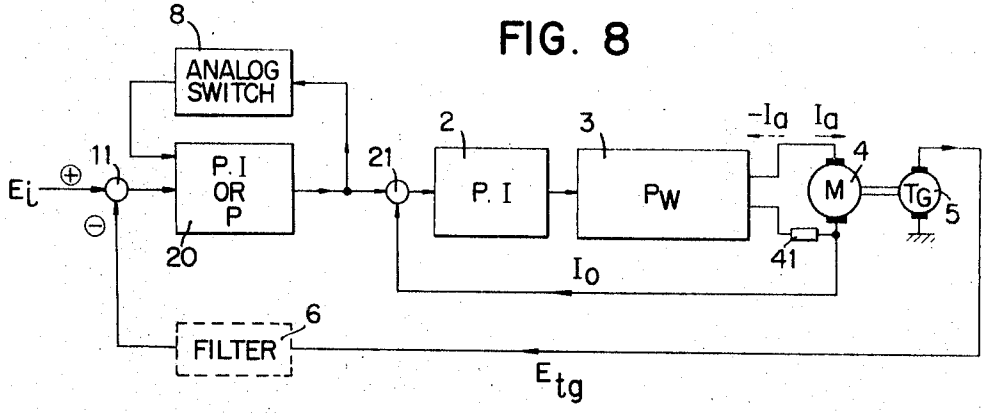

FIG. 4

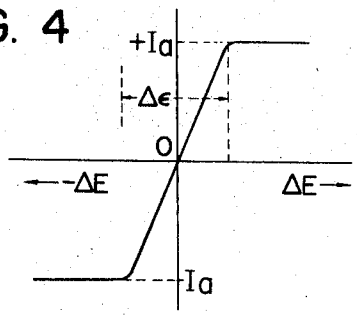

FIG. 6

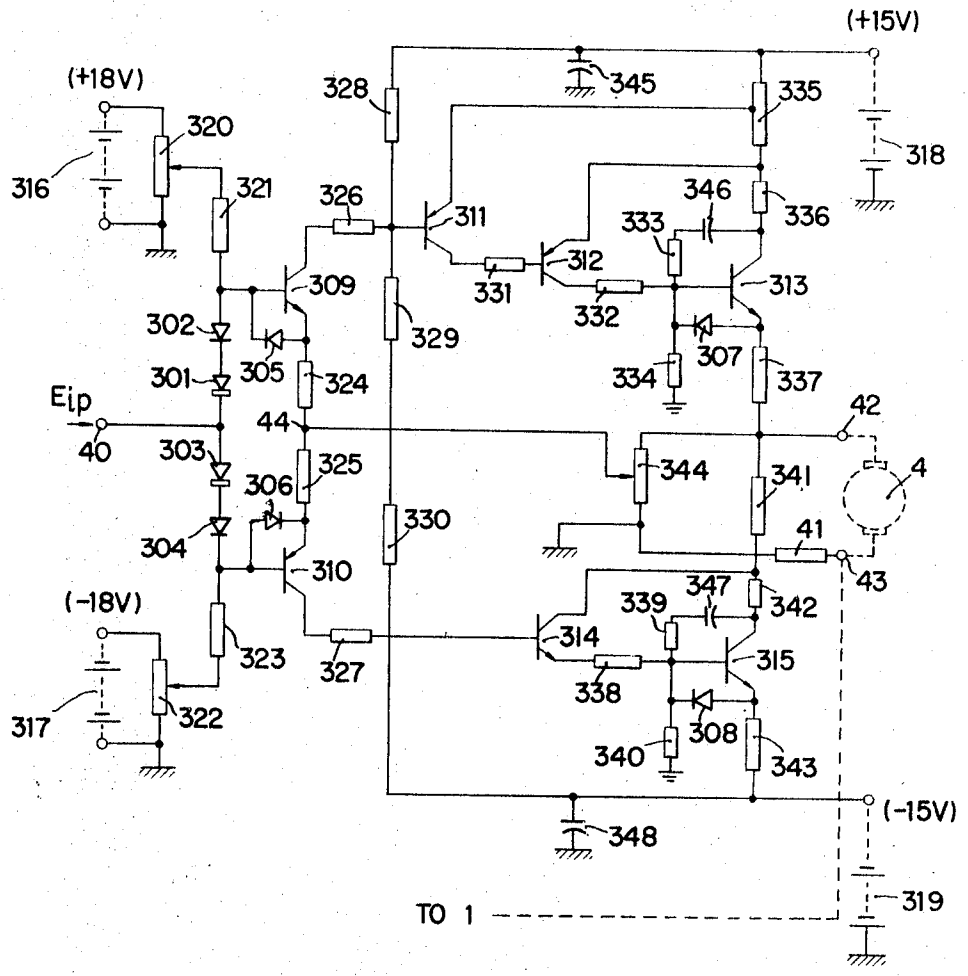
(+15V)
(+18V)
328
345
335
320
318
316
321
326
346
336
311
333
312
313
309
331
332
302
329
307
305
324
334
337
301
Eip
44
42
40
303
325
344
341
4
306
330
41
304
310
43
347
(-18V)
339
342
314
323
327
315
338
317
322
308
340
343
(-15V)
348
319
TO 1

FIG. 7

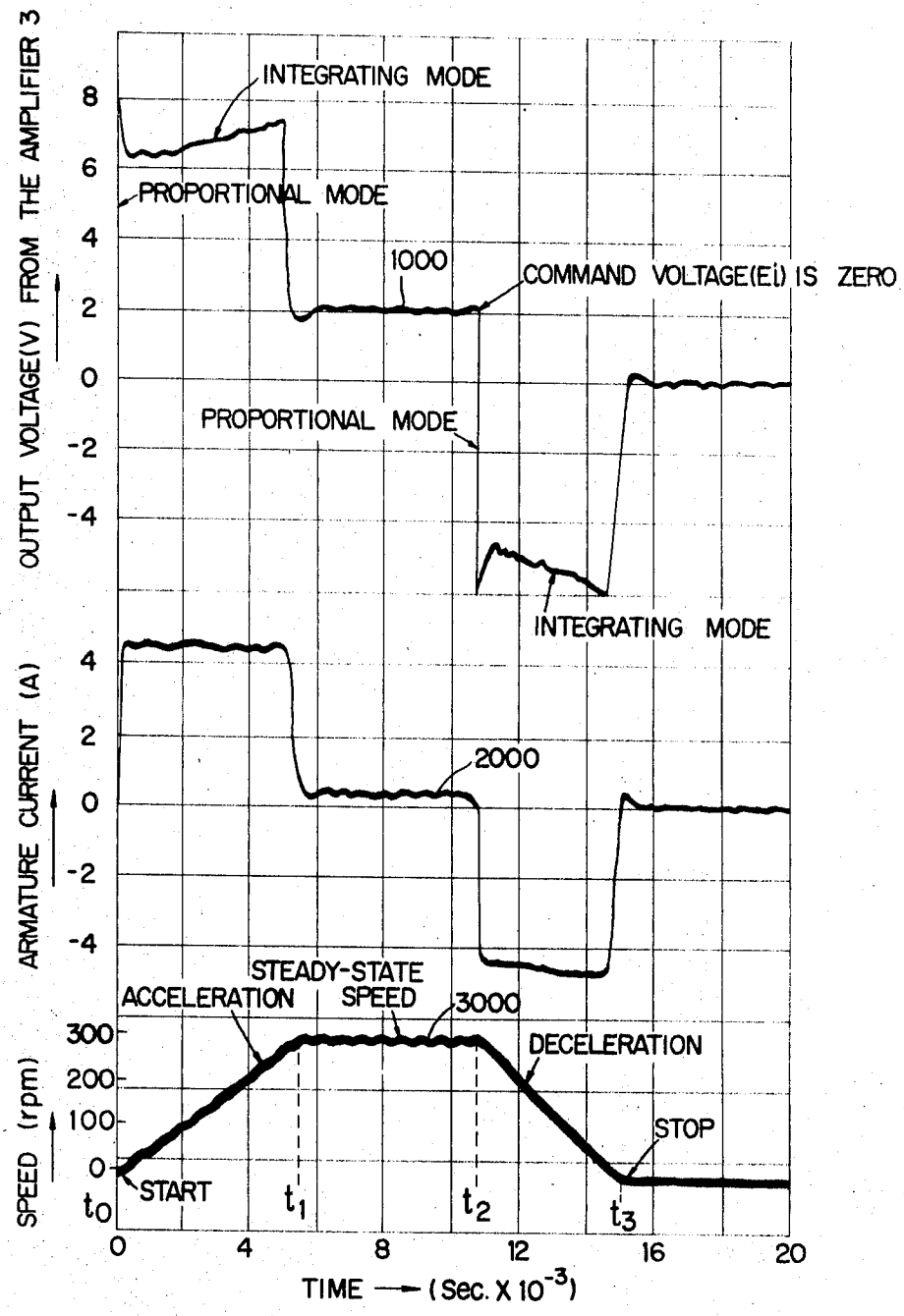
OUTPUT VOLTAGE(V) FROM THE AMPLIFIER 3
INTEGRATING MODE
PROPORTIONAL MODE
1000
COMMAND VOLTAGE(Ei) IS ZERO
PROPORTIONAL MODE
INTEGRATING MODE
ARMATURE CURRENT (A)
2000
STEADY-STATE SPEED
ACCELERATION
3000
DECELERATION
STOP
SPEED (rpm)
START
t_0
t_1
t_2
t_3
TIME → (Sec. X 10^{-3})

FIG. 9

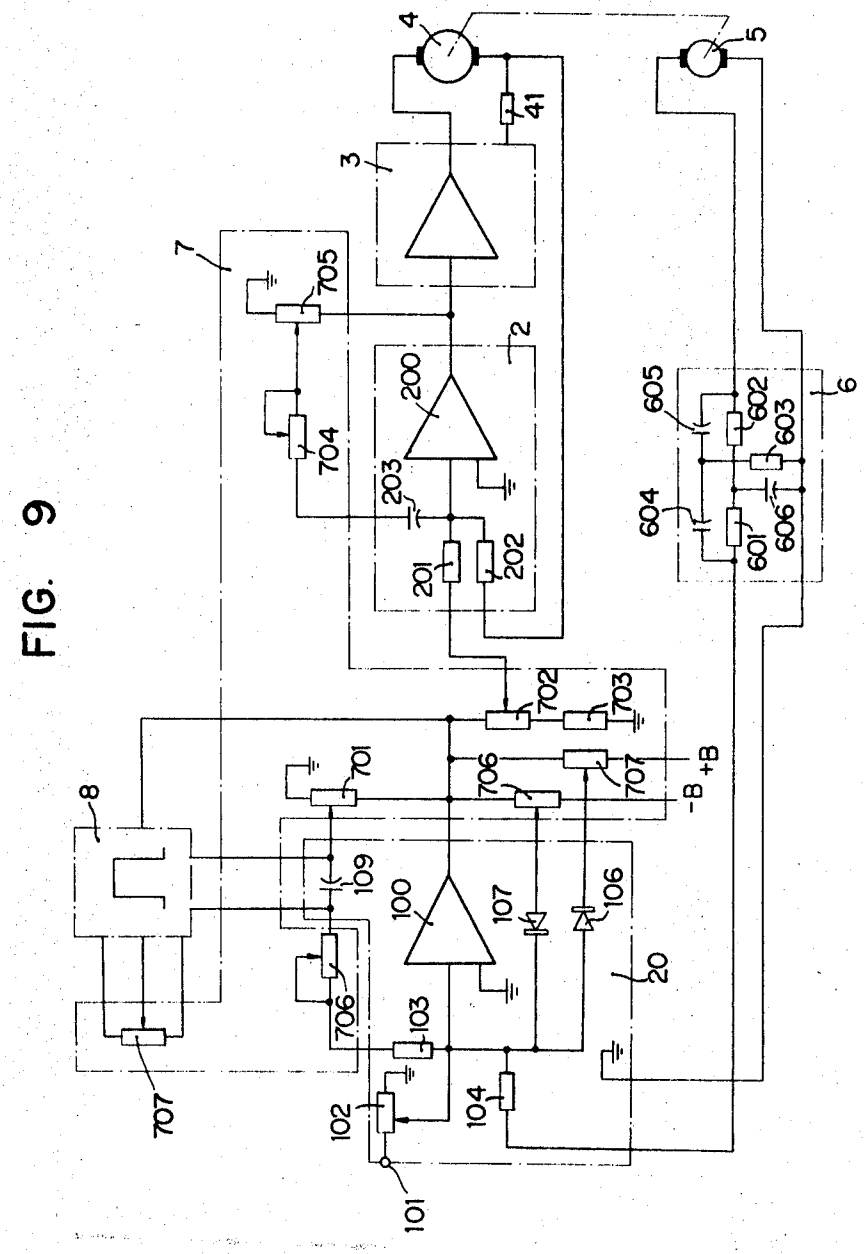
4
5
41
3
7
705
2
200
704
203
201
202
605
602
603
6
604
606
601
702
703
701
706
707
+B
-B
8
109
100
107
106
20
706
103
707
102
104
101

FIG. 10

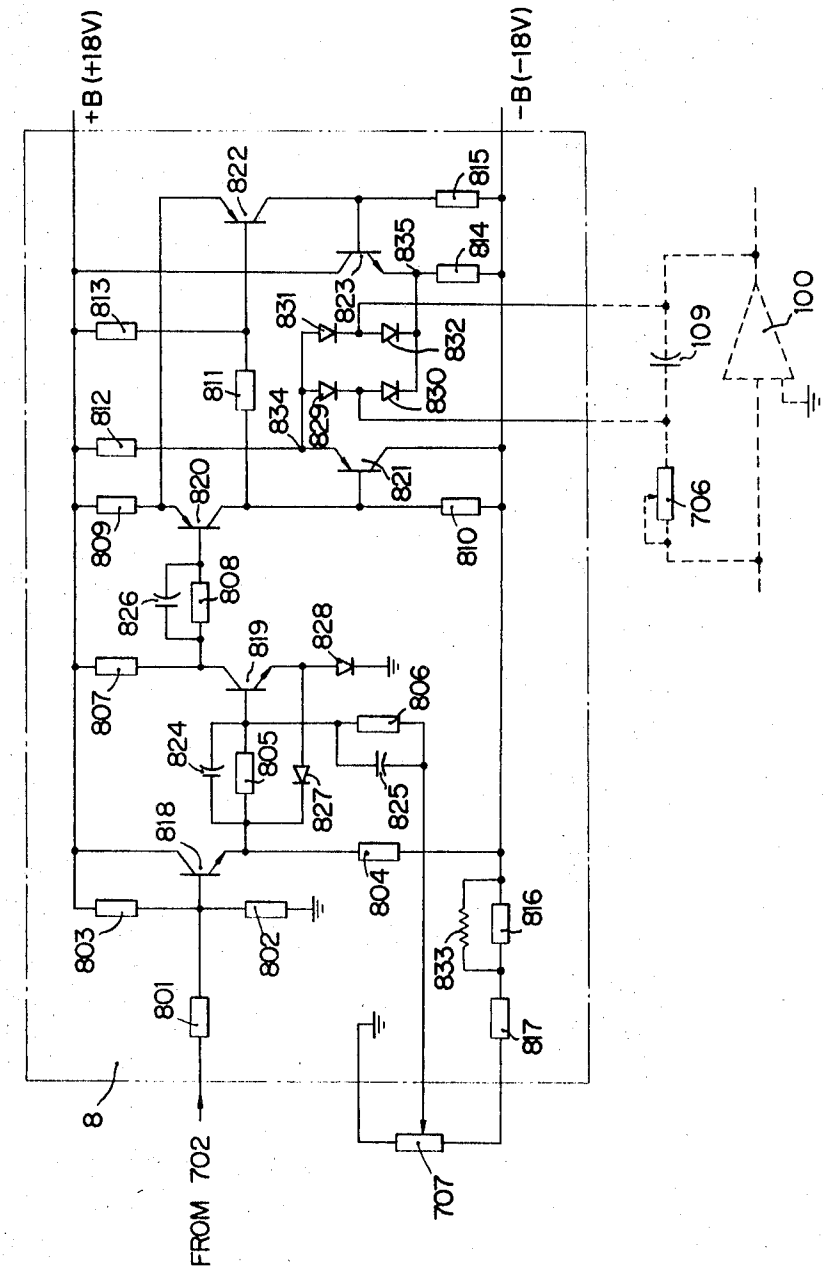
+B (+18V)
-B (-18V)
822
815
835
814
813
831
823
832
811
830
812
834
829
821
820
809
810
808
826
819
828
807
806
824
805
827
825
818
804
816
803
802
833
801
817
8
FROM 702
707
109
100
706

FIG. 11

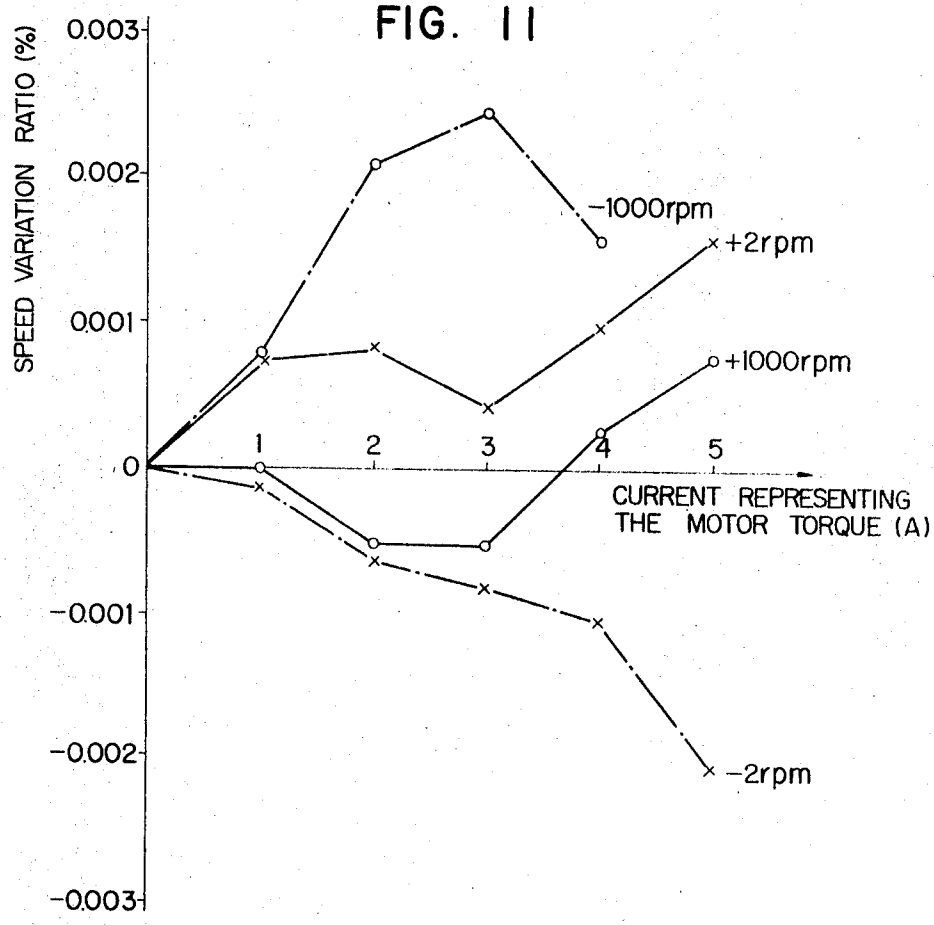
SPEED VARIATION RATIO (%)
0.003
0.002
0.001
0
-0.001
-0.002
-0.003
1
2
3
4
5
CURRENT REPRESENTING THE MOTOR TORQUE (A)
-1000rpm
+2rpm
+1000rpm
-2rpm

FIG. 12

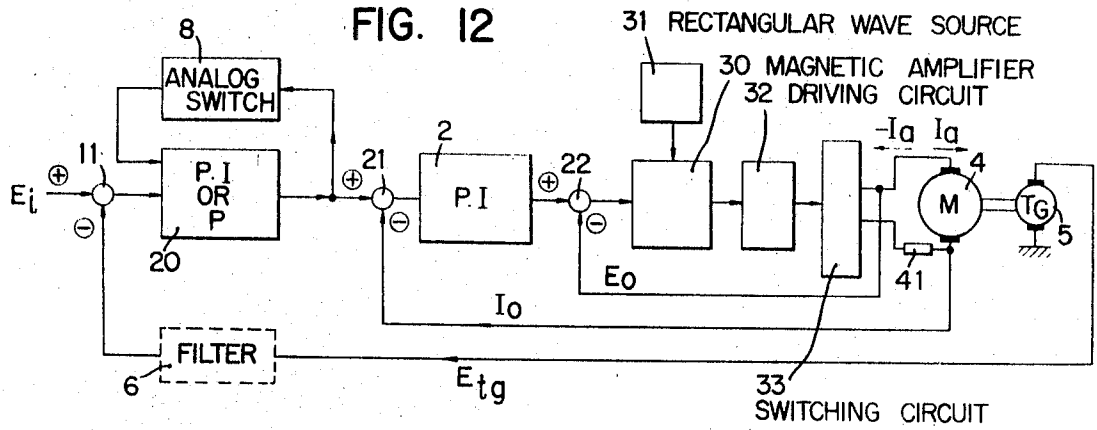
8
ANALOG SWITCH
11
P.I OR P
20
Ei
21
2
P.I
22
31 RECTANGULAR WAVE SOURCE
30 MAGNETIC AMPLIFIER
32 DRIVING CIRCUIT
-Ia Ia
4
M
TG
5
41
Eo
Io
FILTER
6
Etg
33
SWITCHING CIRCUIT

FIG. 13

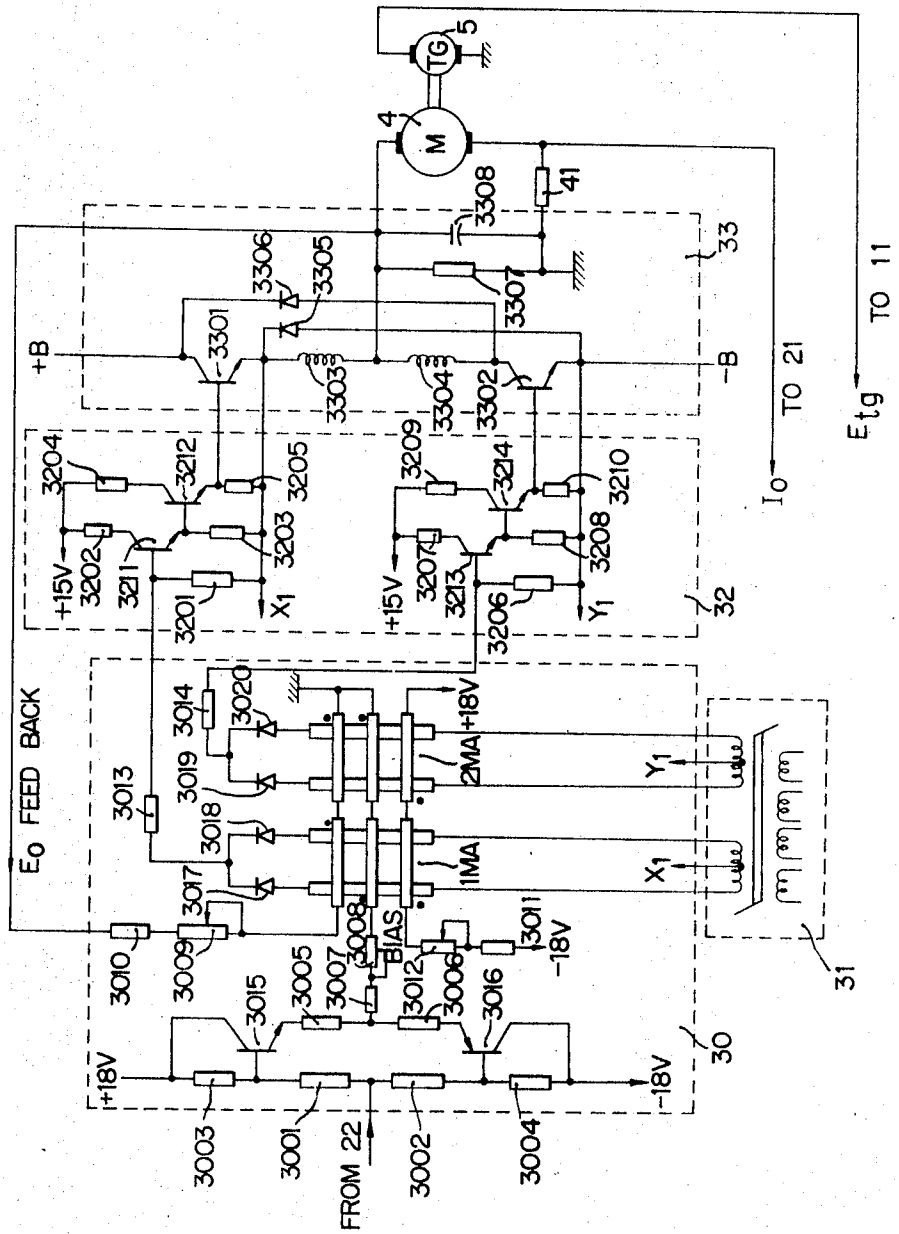
TG
5
4
M
41
3308
3306
3305
3307
33
+B
3301
3303
3304
3302
-B
TO 21
TO 11
E_{tg}
I_o
3204
3212
3205
3209
3214
3210
3202
3211
3203
3207
3213
3208
+15V
3201
X_1
3206
Y_1
32
E_o FEED BACK
3014
3020
3019
3013
3018
3017
2MA
+18V
1MA
Y_1
X_1
3010
3009
3008
BIAS
3011
-18V
3015
3005
3007
3012
3006
3016
31
30
+18V
-18V
3003
3001
FROM 22
3002
3004

SPEED CONTROL SYSTEM FOR D.C. MOTOR

BACKGROUND OF THE INVENTION

This invention relates to speed control systems for DC motors and more particularly to a system which affords not only precision control of the DC motor speed but also exact control of the motor starting and stopping operations in the normal running direction and the reverse running direction.

Although various control systems for DC motors have been disclosed heretofore, none of such control systems has yet exhibited satisfactory performance especially when the DC motor is employed, for instance, in a magnetic tape feeding mechanism in an electronic computer wherein an extremely high speed response is required.

SUMMARY OF THE INVENTION

Therefore, the primary object of the present invention is to provide a novel control system for a DC motor which, with respect to such severe commands for normal or reversed running or for stopping of the motor, can afford constant acceleration and constant steady-state speed operation in either of the normal and reverse directions.

Another object of the invention is to provide a speed control system capable of controlling the speed of a DC motor in a wide speed range and also of effecting control with quick response to the above stated operational commands.

Still another object of the invention is to provide a novel control system for a DC motor which is capable of controlling the motor speed in a narrow deviation range despite variations in the load torque or an outside disturbance, with simultaneous preservation of the above described wide control range and quick response characteristics.

An additional object of the invention is to provide a novel control system for a DC motor wherein a pulse train amplitude modulated by a command signal is employed for controlling a switching circuit which is provided in the DC power supplying circuit for the DC motor, whereby economical power consumption of the control system is achieved.

These and other objects of the present invention have been achieved by a novel control system for a DC motor which comprises a saturation amplifier delivering a positive or negative saturated voltage depending on the sign of a difference voltage between a command voltage and a negatively fed back speed-representing voltage of the motor to be controlled, a proportional and integrating amplifier receiving a difference voltage between the output of the saturation amplifier and a negatively fed back voltage representing the actual armature current in the motor as its input, and a power amplifier amplifying the output of the second amplifier for supplying the armature current for the motor. In other aspects, of the invention, the first amplifier in the above described control system may be replaced by another proportional and integrating amplifier cooperating with a circuit portion prohibiting the integrating operation depending on the output of the replacing amplifier, or the power amplifier may be replaced by a DC current-switching circuit employing an amplitude-modulated pulse signal for switching the armature current of the motor as desired. As will be seen from the following description, the term "proportional" as applied to an amplifier indicates that the amplifier output is proportional to the amplifier input; and the phrase "proportional and integral" as applied to an amplifier indicates that the amplifier output is proportional to a time integral of the amplifier input.

The nature, principle, and utility of the invention will be more readily apparent from the following detailed description with respect to preferred embodiments thereof when read in conjunction with the accompanying drawings.

BRIEF DESCRIPTION OF THE DRAWINGS

In the drawings:

FIGS. **1** and **2** are graphical representations indicating variations of quantities with time for a description of an optimum control system for a DC motor according to the present invention;

FIG. **3** is a block diagram showing a control system for a DC motor constituting a first embodiment of the present invention, wherein a saturable amplifier is employed in the input stage for the command voltage;

FIG. **4** is an expanded representation of the input-output characteristic of the saturable amplifier;

FIG. **5** is a circuit diagram of the first embodiment of the invention partly indicated in detail;

FIG. **6** is a circuit diagram showing a detailed example of organization of the power amplifier employed in the first embodiment of the present invention;

FIG. **7** shows oscillograms indicating the operational characteristics of the first embodiment of the invention;

FIG. **8** is a block diagram of a control system for a DC motor constituting a second embodiment of the present invention;

FIG. **9** is a circuit diagram of the second embodiment of the invention partly indicated in detail;

FIG. **10** is a detailed circuit diagram for a switching circuit which accomplishes "ON-OFF" control of the integrating operation of the proportional-integrating amplifier employed in the second embodiment of the invention;

FIG. **11** is a graphical representation indicating the variation of the speed variation ratio with the variation of the torque-representing current measured for the second embodiment of the invention;

FIG. **12** is a block diagram showing a third embodiment of the invention wherein a DC current switching circuit employing an amplitude-modulated pulse signal is utilized instead of the power amplifier supplying an electric power to the motor; and

FIG. **13** is a detailed circuit diagram showing the DC current switching circuit and the amplitude-modulated pulse generating circuit employed in the third embodiment of the invention.

DETAILED DESCRIPTION

Referring first to FIGS. **1** and **2** showing optimum modes of control of a DC motor in accordance with the present invention, it is indicated that, upon application of a command voltage Ei of stepped form to the DC motor, the speed of the motor is varied from +N to −N according to a predetermined sequence such as acceleration, constant speed running, and deceleration, or acceleration, deceleration, and reverse running, and the current flowing through the motor armature is thereby varied from $+Ia$ to O and then to $-Ia$ at corresponding time positions t_0 through $t7$.

In FIG. **3** showing a first embodiment of the present invention, there are indicated, in the form of a block diagram, a saturable amplifier **1**, a proportional and integrating amplifier (hereinafter called P.I. amplifier) **2**, a transistor type power amplifier **3**, a low inertia DC motor **4**, a tachometer generator **5** coupled to the DC motor **4**, a filter **6**, and operators **11**, **21**. In the system of the above described organization, a voltage Etg obtained from the tachometer generator **5** and used as a feed back voltage related to the speed of the DC motor **4** is applied to the operator circuit **11** together with the input voltage Ei, and the resulting difference voltage ΔE is fed to the input of the saturable amplifier **1**. The amplifier **1** is, in itself, a switching amplifier, the input/output characteristic of which is indicated in FIG. **4** on a much enlarged scale.

The proportional amplification range of the amplifier is found to be an extremely narrow one (ΔE), narrower than a voltage corresponding to a desired precision (for instance, assuming that the desired precision is 1 percent and the feedback voltage from the tachometer generator is 1V, then the voltage corresponding to the desired precision is 10 millivolt), whereby any harmful effect such as a ripple in the voltage

from the tachometer generator can be substantially eliminated. When the output voltage of the amplifier **1** is assumed to be I*i*, and the voltage component of the armature current (±I*a*) of the motor **4** is assumed to be I*o*, the difference voltage ±ΔI of the two voltages I*i*, I*o* is applied to the input side of the P.I. amplifier **2**, and the power amplifier **3** is driven by the output voltage of the P.I. amplifier **2**. The armature current I*a* or −I*a* of the motor **4** is thus controlled.

Numeral **41** designates a resistor to pick up the voltage I*0*, and the filter **6** is employed for eliminating resonance frequencies which may be created at the time a mechanical resonance occurs in the tachometer generator portion.

Referring now to FIG. **5** also showing the first embodiment of the present invention, there are indicated in detail the saturable amplifier **1**, the P.I. amplifier **2**, and the filter **6**, all indicated in FIG. **3**, and further and adjusting portion **7** of the control device. In the circuits, numeral **101** designates an input terminal to which the command voltage E*i* is applied. Numerals **102** through **105**, **601** through **603**, **701** through **705**, **201**, and **202** designate resistors, numerals **108**, **109**, **604** through **606**, and **203** designate capacitors, numerals **106**, **107** designate Zener diodes, and numerals **100**, **200** designate high-gain sign-converting amplifiers.

When the resistor **701** in the adjusting portion **7** is adjusted, the above described voltage difference ΔE can be regulated, and by the adjustment of the resistor **702**, the saturated value of the output voltage I*i* of the amplifier **1** can be regulated. Likewise, the integrating time-constant of the P.I. amplifier **2** can be regulated by adjusting the resistors **704**. **705** in the adjusting portion **7**. When the above described mechanical oscillation occurs, the harmful effect can be eliminated by somewhat expanding the voltage range ΔE corresponding to the linear portion of the characteristic of the amplifier **1**.

Although, in the general form of the conventional control device of similar type, a negative feedback of a voltage corresponding to the armature current to the power amplifier preceding the DC motor and also another feedback of the voltage E*tg* corresponding to the motor speed outwardly to the above-mentioned feedback to a further preceding stage of the control circuit were provided, an armature current I*a* such as that indicated in FIGS. **1** and **2** could never be obtained with respect to a step-formed command voltage. Furthermore, since the output voltage I*i* was always required at the output side of the amplifier **1** even while the motor **4** was running at a constant speed, optimum control of a minimum response time of the DC motor could not be accomplished.

According to the present invention, in addition to the above described circuit components, an integrating amplifier having a reset time T*r* is provided between the motor **4** and the amplifier **1**, so that at P.I. operation is achieved with respect to the armature current I*a* of the motor **4**. For this reason, indicial response of the current I*a* with respect to the command input current I*i* will have no attenuation, and a similar stepped output can be obtained with respect to a stepped input. Since a speed feedback is provided outwardly of the control system, the differential of the voltage will be

$$E=Ei\cdot S/(S+c),$$

wherein, S is a Laplacean operator, and C is a constant. Accordingly, with respect to the stepped command voltage $Ei=1/S$, an ultimate deviation of

$$\lim_{t\to\infty} E=\lim_{S\to 0} S\frac{1}{S}\frac{S}{S+C}=0$$

can be obtained. Since the amplifier **1** is a switching amplifier of continuously operable type, the response of the system can be made extremely rapid, whereby an optimum control system of fastest response can be realized.

In FIG. **6**, a detailed connection diagram for the power amplifier **3** employed in this embodiment of the invention is indicated. In this power amplifier, there are included diodes **301** through **308**, transistors **309** through **315**, DC power sources **316** through **319**, resistors **320** through **344**, capacitors **345** through **348**, an input terminal **40**, and output terminals **42**, **43**. Since the output voltage of the amplifier is fed back from the output terminal **42** to the input terminal **40** through a resistor **344** as its minor loop, the voltage drop due to the resistors **335** through **337**, **341** through **343** which are employed for stabilizing the thermal characteristics of the power transistors **313** and **315** can be eliminated. Furthermore, the disadvantageous effects caused by the internal resistances of the power sources **318** and **319** and ripples therein can be eliminated by the above-mentioned feedback, and quick frequency response of the power amplifier and linearity of the output characteristic can be attained.

In FIG. **7**, there are indicated oscillograms of the output voltage (curve **1000**) of the amplifier **3**, the armature current (curve **2000**), and the rotating speed of the motor **4** (curve **3000**; minute oscillations on this curve are caused by the resonance of the tachometer generator **5** around a frequency of 1.68 KC and the rotating speed of the motor **4** is really a smooth curve), these curves being for the first embodiment of the present invention and being represented against the same abscissa of time.

A block diagram for the second embodiment of the invention is shown in FIG. **8**. In this embodiment, instead of the switching amplifier **1** of the first embodiment, a proportional and integrating amplifier **20** is provided, and an analog-switch **8** operated by the output of the proportional and integrating amplifier transfers the operational characteristic of the P.I. amplifier between a proportional integrating mode and an integrating mode. More specifically, at the starting or stopping operation of the motor wherein a limitation of the armature current is required, the control system is operated in the proportional mode (P-mode), and in the rest of time, the control system is operated in the proportional and integrating mode (P-I mode) by means of the analog-switch **8** provided at a preceding stage of the control system. Thus, the operational characteristic of the control system and its load characteristic in the steady state can be simultaneously improved.

In the above described operation, since the P-I mode transferring operation is performed by its own output signal or the value of the armature current of the motor **4**, a compensation for equalizing the full load speed can be carried out throughout the whole speed range of the motor **4**, and, furthermore, a minimum-period-control being attained for the starting and stopping control of the motor **4**, the response speed thereof may also be made fast as in the case of the first embodiment of the invention.

Now considering a condition wherein the load torque (or the armature current) is varied in the first example, the above-mentioned switching amplifier **1** has a linear portion in the characteristic as shown in FIG. **4**, and as a result steady-state deviation determined by the amplification factor in such a linear portion is created each time the variation in the load torque occurs. Since the deviation is decreased along with an increase in the amplification factor, the deviation may be considerably minimized in the first example. Theoretically, however, this value cannot be brought to zero, and a deviation of less than approximately 0.1 percent is inevitably involved in the system of the first example. For the improvement on this point, one more stage of proportional integrating element is provided before the P.I. amplifier **2** so that the stepwise variation of the load torque may be thereby neglected in the steady state.

When a proportional and integrating element is employed as a compensating element for the stepwise variation of the load torque, the steady-state deviation can be theoretically nullified. However, the problem is that a saturating characteristic should be imparted to the proportional and integrating element for the purpose of maintaining the command current at a constant value and that, when the compensating element operates as a proportional and integrating element having a saturation characteristic, the time instant at which the operational point leaves the saturating region is delayed due to the charging current flowing into the feedback capacitor in the

amplifier during its saturating period, and, for this reason, the response at the time of starting and stopping of the motor **4** is seriously impaired.

To prevent this deterioration of response and, furthermore, to improve the steady-state characteristic of the control system, the proportional-integrating element **20** is made operable in either the proportional mode or in the integrating mode, and switching of these operational modes is carried out depending on the command current value applied to the motor. When the command current value is lower than a value determined from the accelerating current and the rated current of the motor **4** (the accelerating current **2**(rated current)), the element **20** operates as a proportional and integrating element, and, when the command current value is higher than the above-mentioned value determined from the accelerating current and the rated current of the motor **4**, the element **20** operates as a proportional element partly saturated.

In FIG. **9**, there is indicated the second embodiment of the invention partly shown in great detail. In the drawing, elements similar to or corresponding to those in the first embodiment of the invention are designated by like reference numerals. Numerals **706** and **707** designate resistors, and numeral **109** designates a capacitor so arranged as to be short circuited when the output of an amplifier **100** in the element **20**, that is, the input of the analog switch **8** (which is proportional to the armature current of the motor **4**) falls within an amplitude around a central value of zero, and the amplitude is predetermined by the resistor **707** acting as a regulator.

In FIG. **10**, there is indicated a detailed connection of the analog switch **8** which comprises resistors **801** through **817**, transistors **818** through **823**, capacitors **824** through **826**, diodes **827** through **832**, and a temperature compensating thermistor **833**. With these circuit components, a synchronized switching circuit consisting mainly of a bridge circuit made up of the diodes **829** through **832** is organized. When a signal exceeding a predetermined value arrives at the input terminal resistance **801**, the output voltages of the transistors **818** through **820** are raised to higher levels as desired, which in turn elevate the emitter potential of the transistor **821** (or the junction point **834**), whereby the transistor **822** is brought into off state, and the transistor **823** is supplied with a low voltage from the power source −B (−18v.) As a result, the potential of the junction point **835** is lowered, and a current flows from a point **834** to a point **835**. Thus a voltage across the capacitor **109** connected to a bridge circuit of the diodes **829** through **832** is short circuited through the power source (−B and +B), and, thus, the element **20** does not operate in the integrating mode but operates in a quick response proportional mode.

On the other hand, when the signal applied to the resistor **801** is less than a predetermined value, the transistor **822** is brought into "ON" state, thereby elevating the potential of the junction point **835** and lowering the potential of the junction point **834**, and the bright circuit consisting of the diodes **829** through **832** blocks the current to flow from the point **834** to the point **835**, whereby the capacitor **109** performs its integrating function.

Experimental values obtained by the second embodiment of the invention are indicated in FIG. **11**. As is apparent from the drawing, the speed variation for the running speeds of the motor of ±1000 r.p.m. is limited to less than 0.003 percent. In this system, the P.I. control region of the element **20** is set beforehand to a desired value in consideration of the loading range of the motor **4** employing the regulator portion **707**.

In FIG. **12**, there is indicated a third embodiment of the present invention, wherein a DC power supplying device employing a pulse amplitude-modulation is used instead of the power amplifier **3** in the second example shown in FIG. **9**, which is constructed in the form of a transistor DC amplifier as shown in FIG. **6**. In this example; there are included a magnetic amplifier **30**, a rectangular wave generating source **31**, a transistor switching circuit **33**, and a driving circuit **32** placed at the preceding stage of the circuit **33**, and the supply voltage *Eo* for the motor **4** is fed back to an operator **22**.

The third embodiment of the invention is illustrated in more detail in FIG. **13** in which are included resistors **3001** through **3014**, transistors **3015** and **3016**, diodes **3017** through **3020**, center-tap-doubler-type magnetic amplifiers IMA and 2MA, other resistors **3201** through **3210**, other transistors **3211** through **3214**, power transistors **3301** and **3302**, inductances **3303** and **3304**, other diodes **3305** and **3306**, still another resistor **3307**, and a capacitor **3308**, and a frequency of **8** kc. is employed for the rectangular wave generated from the source **31** (generally this frequency may be increased up to 100 kc.) In this example, the inductances **3303** and **3304** act as current limiting reactors for a circulating current which flows through the transistors **3301** and **3302** when each of the transistors conducts, and the inductances **3303** and **3304** also act as smoothing reactors for the DC modulated current (*Ia* or −*Ia*).

The diodes **3305** and **3306** constitute electrical valve members which form a circulating path starting from the inductance **3303**, through inductance **3304**, diode **3306**, +B, −B, diode **3305**, and again to inductance **3303**, whereby the electrical energy stored in the inductances **3303** and **3304** by the circulating currents passing through the transistors **3301** and **3302** when these transistors are conducting is circulated back to the power source at the time the transistors **3301** and **3302** are both brought into "OFF" state, Since twice the power source voltage is applied to either of the transistors **3301**, **3302** when these transistors are brought into "OFF" state, a full bridge-type transistor switching circuit is preferably employed instead of the semibridge-type switching circuit as shown in FIG. **13** if the power source voltage (±B) is considerably high or if the accelerating period of the motor **4** is excessively long.

By means of the third embodiment of the invention, a motor **4** of far larger DC power capacity than in the cases of the first and the second examples can be used, and the application range of the present invention is thereby much expanded.

As is apparent from the above description, according to the present invention, an excellent speed control system for a DC motor, having minimal response time, wide field of application, and the least speed variation ratio can be provided.

We claim:

1. A speed control system for DC motor, said system comprising, generator means for producing first negative feedback voltages whose magnitude and polarity correspond, respectively, to the speed and direction of rotation of said motor, armature current sensing means for producing second negative feedback voltages whose magnitude and polarity correspond, respectively, to the magnitude and direction of armature current in said motor, a command input terminal for receiving command input signal voltages whose magnitude and polarity correspond, respectively, to desired motor speed and direction, a first amplifier connected to produce first amplifier voltages of a predetermined magnitude when the first negative feedback and the input signal voltages differ, the polarity of said first amplifier voltages corresponding to the direction of voltage difference, a second amplifier connected to produce second amplifier voltages which correspond in magnitude and direction to the difference between an integral of said first amplifier voltages and said second negative feedback voltages and a power amplifier for amplifying said second amplifier voltages and for applying armature current to said motor corresponding to the thus amplified voltages.

2. A speed control system according to claim **1** wherein said power amplifier is a transistor type DC amplifier having temperature stabilizing resistors; and wherein said power amplifier includes negative feedback circuit means comprising a resistive connection between the amplifier output and input whereby voltage drops across the temperature stabilizing resistors are eliminated.

3. A speed control system for a DC motor, said system comprising, generator means for producing first negative feedback voltages whose magnitude and polarity correspond, respectively, to the speed and direction of rotation of said motor, armature current sensing means for producing second negative feedback voltages whose magnitude and polarity correspond

respectively, to the magnitude and direction of armature current in said motor, a command input terminal for receiving command input signal voltages whose magnitude and polarity correspond, respectively, to desired motor speed and direction, a first amplifier connected to produce first amplifier voltages which correspond in magnitude and direction to the difference between the first negative feedback voltages and the input signal voltages, a second amplifier connected to produce second amplifier voltages which correspond in magnitude and direction to the difference between the integral of said first amplifier voltages and for applying armature current to said motor corresponding to the thus amplified voltages, signal integrating means switchable into and out of the signal flow path of said first amplifier and switch means connected to switch said signal integrating means out of the signal flow path of said first amplifier whenever either said second negative feedback voltages or the output of said first amplifier exceeds a predetermined magnitude.

4. A speed control system according to claim 3 wherein said signal integrating means includes a capacitor and wherein said switch means comprises an electronic switch responsive to output voltages from said first amplifier in excess of said predetermined magnitude to short circuit said capacitor.

5. A speed control system according to claim 4 wherein said electronic switch comprises a diode bridge circuit, means connecting the AC terminals of the bridge circuit across said capacitor and transistor switch means arranged to connect the DC terminals of the bridge circuit across a DC power source in response to voltages in excess of said first predetermined magnitude.

6. A speed control system according to claim 5 wherein said power amplifier comprises a direct current switching circuit responsive to amplitude modulated pulse signals to switch on and off a DC power source to said motor, wherein there is provided a further negative feedback means connected to feedback the motor supply voltage to the output of said second amplifier to modify same and wherein there are provided pulse modulation means to produce amplitude modulated pulse signals for said power amplifier in response to the modified output of said second amplifier.

7. A speed control system according to claim 6 wherein said direct current switching circuit comprises a rectangular wave source, wherein said pulse modulation means comprises a pair of center tapped doubler magnetic amplifiers, and wherein said power amplifier further comprises a transistor type DC amplifier connected to amplify the output of said pulse modulation circuit, and a bridge circuit formed by a plurality of power transistors connected to be switched on and off by outputs from said DC amplifier.