(No Model.)

M. H. DILL.

STARTER'S GATE FOR RACE TRACKS.

No. 590,477. Patented Sept. 21, 1897.

Fig. 1.

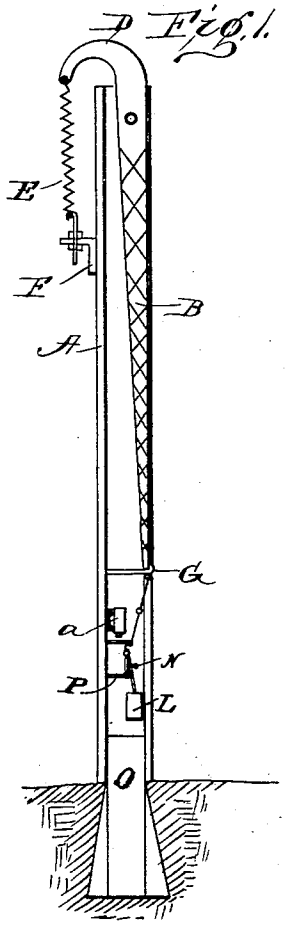

Fig. 2.

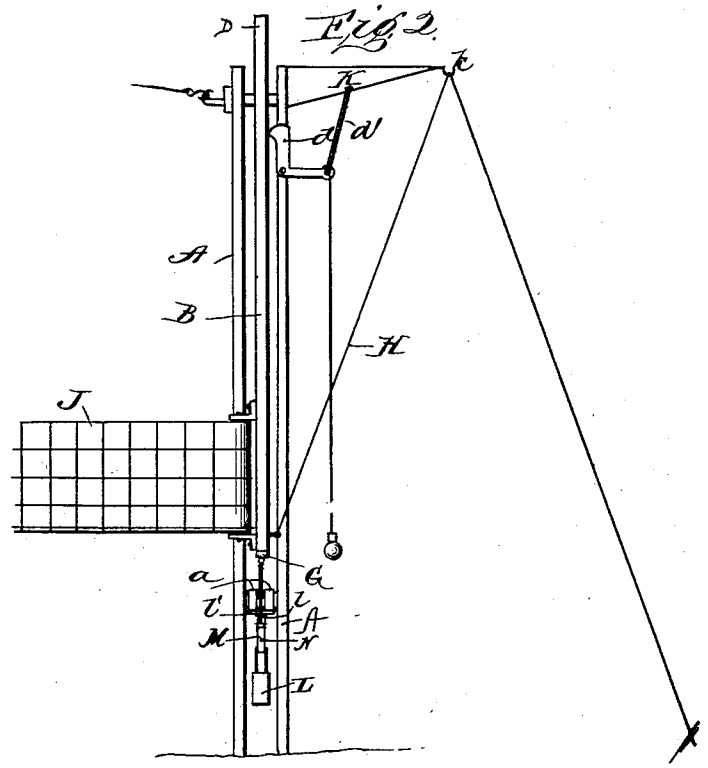

Fig. 3.

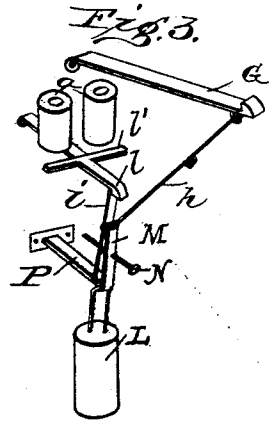

Witnesses:
J. M. Crowley Jr.
A. O. Foster.

Inventor
Martin H. Dill
By L. H. Longshaw
Attorney

THE NORRIS PETERS CO., PHOTO-LITHO. WASHINGTON, D. C.

UNITED STATES PATENT OFFICE.

MARTIN H. DILL, OF LOUISVILLE, KENTUCKY.

STARTER'S GATE FOR RACE-TRACKS.

SPECIFICATION forming part of Letters Patent No. 590,477, dated September 21, 1897.

Application filed June 23, 1896. Serial No. 596,571. (No model.)

To all whom it may concern:

Be it known that I, MARTIN H. DILL, a resident of Louisville, in the county of Jefferson and State of Kentucky, have invented a new and useful Device for Starting Horse-Races, of which the following is a true, full, clear, and exact description.

The object of my device is to start two or more horses in a race at the same time and avoid the annoyance of false starts. It will be clearly seen that by the aid of this device they will be compelled to break evenly, and when they reach the scratch-line all will have an equal show and no one horse will have a chance to steal the advantage over another, thereby starting a race in a very short time.

Another object of my invention is to so construct it that it may be moved at will at different points on the track where races are being held of different distances.

My invention consists in the construction of parts hereinafter described, and pointed out in the claims, reference being had to the accompanying drawings, in which similar letters of reference indicate corresponding parts.

Figure 1 is a side elevation of one side of the device with the ground partly in section and one side of the post removed. Fig. 2 is a front elevation of one side, showing my device set to prevent the horses from advancing. Fig. 3 is a detail view of the releasing mechanism.

Two posts A A are vertically arranged one on each side of the track just outside the fence. Within these posts are pivotally mounted swinging arms B. These arms have a curvature D at the top, and to the curved portions are secured springs E in any suitable manner. A bracket F is fastened to the vertical post, and through this bracket I pass a threaded bolt with an eye in its upper end, and to this eye the spring E is connected. The threaded bolt is provided with two nuts, and by this means the tension on the spring may be diminished or increased at will. Mounted within the vertical post at a suitable distance from the ground is a catch G. This catch is so arranged that when the arms B are drawn down in position to start a race they are held there by said catch. To the lower surface of the catch G is connected a link *h*, which is pivotally fastened to a short arm *i*. This short arm is held at a slight angle by a catch *l* on an armature *l'*, and at or about midway of this short arm *i* I connect a bar M and suspend a weight at the lowermost end of said bar M. The short arm *i*, previously referred to, is hinged to a bracket P, as shown in Figs. 1 and 3, respectively. Through the bar that connects the weight to the short arm is passed a set-screw N. By the aid of this set-screw the arm *i* may be adjusted to give the desired pull on the armature *l'*.

The magnets *a* are supported by a suitable base secured to posts A, respectively, and coupled together by two small wires crossing the track at the top of the device. The batteries may sit on the ground in any convenient place.

As a matter of convenience I provide the posts A with two small hooks at the top, so that the wires may be stretched across the track and fastened or unfastened easily when it is desired to move the device.

On the swinging arms B are provided suitable means for fastening the gate J. This gate is preferably made of vertical slats and as many strands as is necessary to hold the slats in a vertical position. At the end of the gate I provide rollers, so that the gate may be rolled up to suit the width of the track. These rollers are provided with square projections to fit in a corresponding recess in the brackets on the inner side of the arm B to prevent the gate from unwinding and sagging across the track. The bottom strand or strands of the gate may be made of elastic materials, so that should a horse accidentally run against it the gate would give sufficiently to allow the horse to get through without any damage to the machine or rider.

When the gates are stretched, the tendency of the swinging arms is to sag inwardly. To prevent this, the posts A are provided with an outwardly-extending arm K, having a hook or an eye *k* at its outer extremity, and a rod or wire H is attached to this eye *k* and to the end of the swinging arm B, which prevents the arms from being drawn out of position, and allows them to swing. To prevent the gate from swinging down in the way of the rider after once being raised, I provide at the top of the post A a catch *d*, held under tension by an elastic cord *d'*, so that the instant

the arms swing up this catch will drop in underneath them and prevent them from returning. A string is attached to one arm of this catch to disengage it when it is desired to reset the apparatus.

Along the track adjacent to the starting-places are firmly seated in the ground two stub-posts O, the part projecting above the ground being so formed as to fit within the posts A, so that when it is desired to move the device from one starting-place to another all that is necessary is to slip the posts A off the stub-posts and disconnect the wires from the hooks.

The operation is as follows: The arms B are brought down and held against the tension of the spring by the catch G. This holds the gate in a set position. The horses are brought in close proximity to the gate. The starter stands some distance in advance of the gate or at the scratch-line and has an electric push-button easily accessible. When he pushes the button, the magnets lift the armature *l'*, thereby releasing the short arm *i*, which is set to such an angle that it will fall forward, and the weight connected to this short arm will give a sudden jerk on the catch by means of the link, thereby releasing the catch from the ends of the arms B and allowing them to be lifted simultaneously. The horses consequently all break together, and when they reach the scratch-line in front of the starter they are all abreast; so he lets them go by dropping his flag.

Having thus described my invention, what I claim, and desire to secure by Letters Patent, is—

1. In a device for starting horses, the combination of two divided posts with a pair of arms pivoted therein, curved above their pivoted connections, and springs secured to brackets on said posts: the other end of said springs being connected to eyes at the curved ends of said arms, substantially as described.

2. In a device for starting horses the combination of two divided posts having arms pivotally connected between the parts of said posts, their curved upper ends being secured to tension-springs and their lower ends secured by an electrically-operated releasing-catch G, for the purpose as shown and described.

3. In a device for starting horses the combination of two divided posts with a pair of arms pivoted therein carrying a gate, said arms being curved above their pivoted connections, and springs secured to the brackets on said posts, which have nuts for adjusting the tension of said springs: the other ends of said springs being connected to eyes at the curved ends of said arms substantially as described.

4. In a device for starting horses the combination of two divided posts with a pair of arms carrying a gate pivoted therein, an electrically-operated catch G, and a spring for elevating said gate when released from said catch G, and a catch *d* for holding said arms and gate in its elevated position substantially as described.

5. In a device for starting horses the combination of the following elements viz: divided posts A, pivotally-supported arms B, a gate J secured to said arms, a catch G for holding said arms and gate in a depressed position and a releasing device consisting of members *h*, M, short arm *i*, catch *l* and armature *l'*, substantially as described.

In testimony whereof I affix my signature in presence of two witnesses.

MARTIN H. DILL.

Witnesses:

J. ROSS COLHOUN,

F. BENJAMIN.