Oct. 4, 1932. I. F. DITTMAR 1,880,885

SAWING MACHINE

Original Filed Feb. 21. 1927 4 Sheets-Sheet 1

FIG. 1.

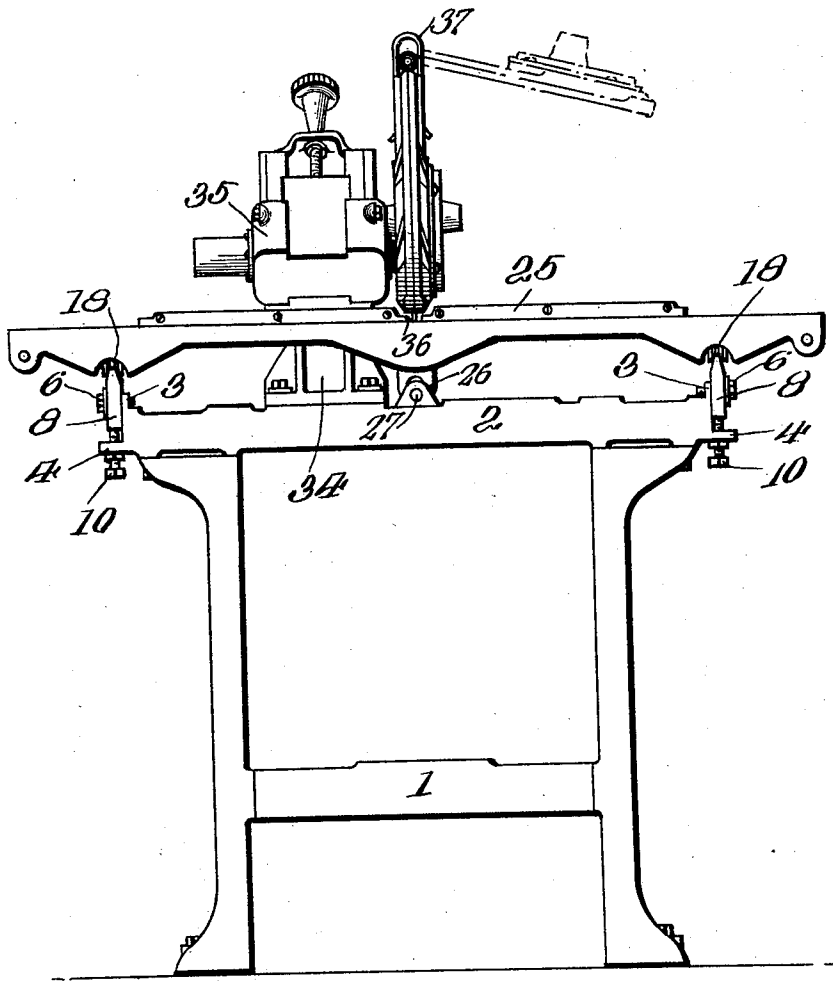

Inventor

Irvin F. Dittman:

By Pattison, Wright & Pattison

Attorneys

Oct. 4, 1932. I. F. DITTMAR 1,880,885

SAWING MACHINE

Original Filed Feb. 21, 1927 4 Sheets-Sheet 2

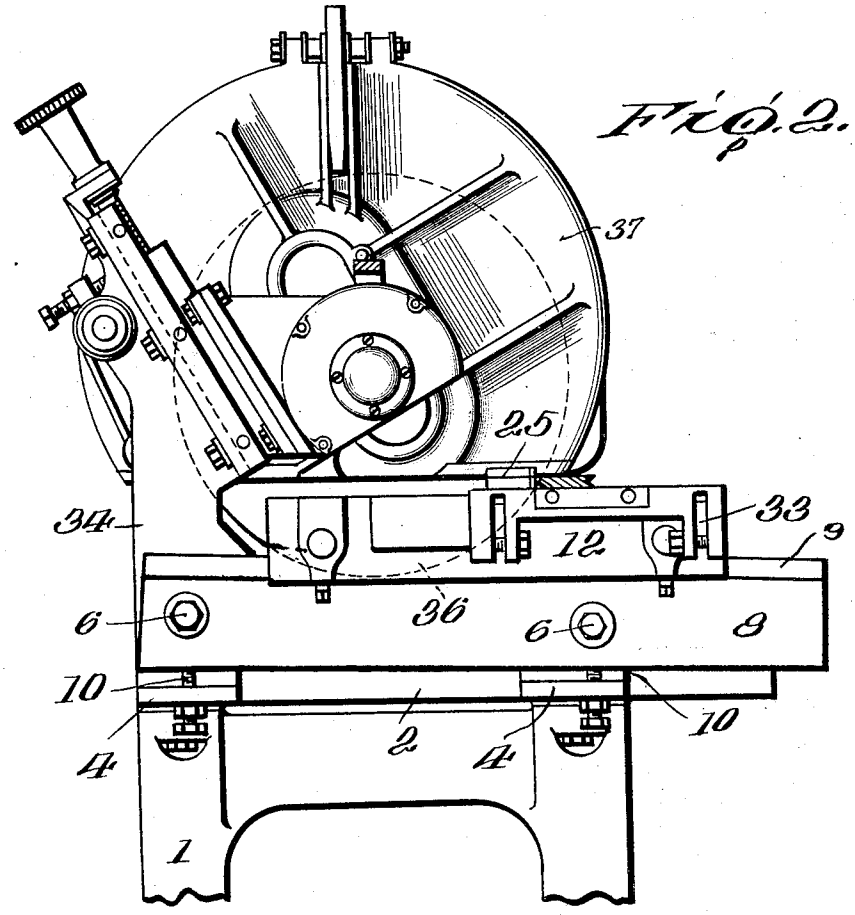

Fig. 2.

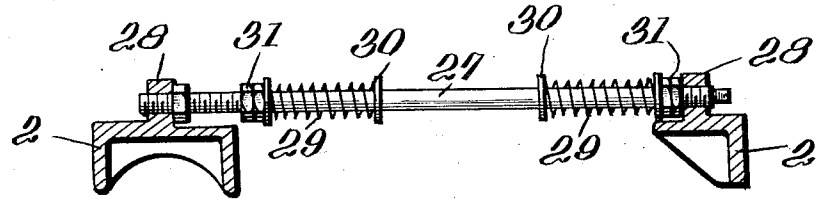

Fig. 3.

Inventor
Irvin F. Dittmar:

By Pollard, Wright & Pollard
Attorneys

Oct. 4, 1932. I. F. DITTMAR 1,880,885

SAWING MACHINE

Original Filed Feb. 21, 1927 4 Sheets-Sheet 3

FIG. 4.

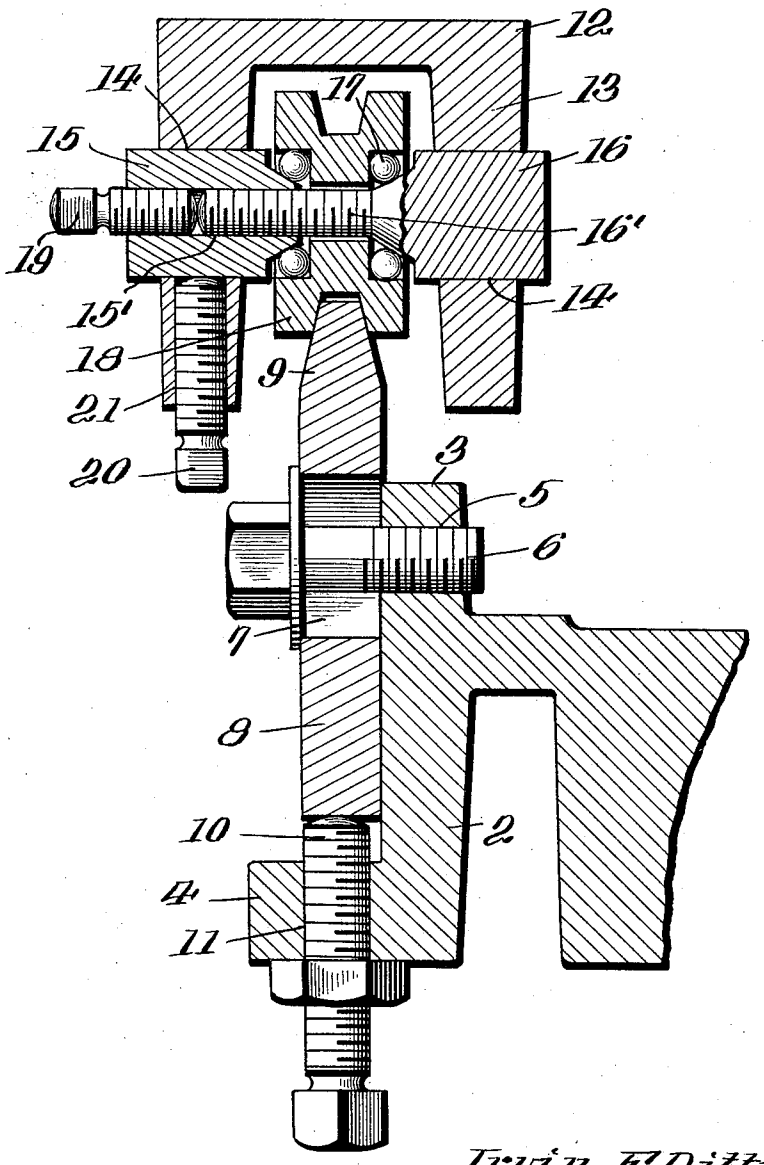

Inventor

Irvin F. Dittmar

By Paterson, Wright & Paterson

Attorneys

Oct. 4, 1932. I. F. DITTMAR 1,880,885

SAWING MACHINE

Original Filed Feb. 21, 1927 4 Sheets-Sheet 4

FIG. 5.

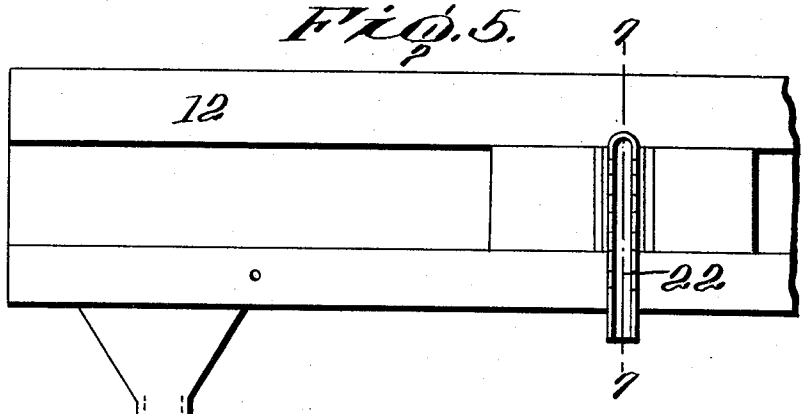

FIG. 6.

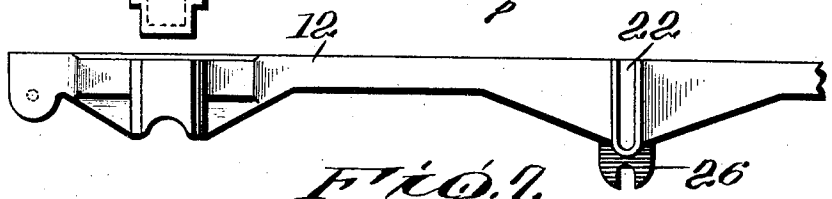

FIG. 7.

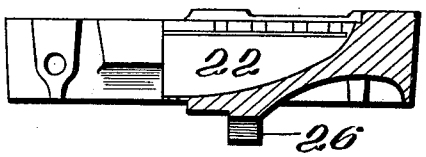

FIG. 8.

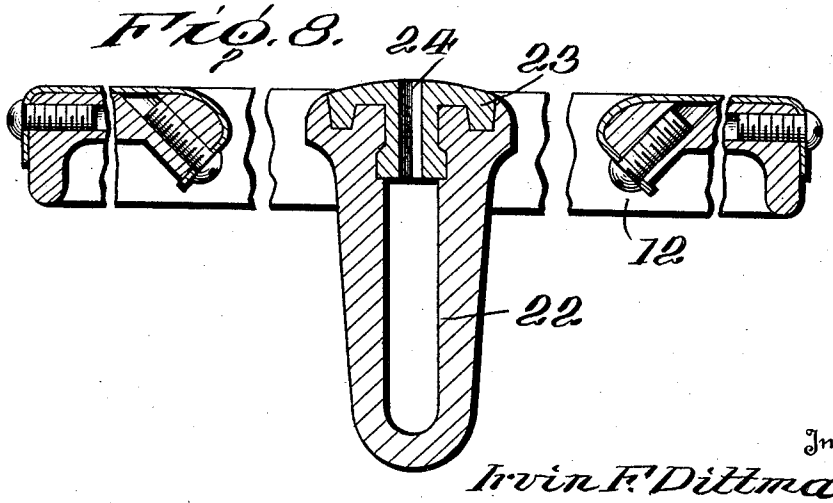

Inventor

Irvin F. Dittmar.

By Pattison, Wright & Pattison

Attorneys

Patented Oct. 4, 1932 1,880,885

UNITED STATES PATENT OFFICE

IRVIN F. DITTMAR, OF WILLIAMSPORT, PENNSYLVANIA, ASSIGNOR TO THE CROMAR CO., OF WILLIAMSPORT, PENNSYLVANIA, A CORPORATION OF PENNSYLVANIA

SAWING MACHINE

Original application filed February 21, 1927, Serial No. 169,993. Patent No. 1,794,758, March 3, 1931. Divided and this application filed April 2, 1930. Serial No. 441,112.

This invention relates to certain new and useful improvements in sawing machines and more particularly to trim saws for cutting material at right angles to form a square cut, the object being to provide a novel form of saw carriage to enable material to be fed properly and quickly to the saw so that the proper cut will be made.

Another object of the invention is to provide novel means for mounting the table so that it is maintained in such a position that the material thereon will be forced into engagement with the cutting edge of the saw to form a perfect right angle cut, the table being adjustable.

Another object of the invention is to provide novel means for limiting the movement of the table in both directions by providing a yieldable bumper in the form of a spring which not only limits the movement of the table, but aids in returning the same.

Other and further objects and advantages of the invention will be hereinafter set forth and the novel features thereof defined by the appended claim.

In the drawings:

Figure 1 is a front elevation of a sawing machine constructed in accordance with my invention;

Figure 2 is a side elevation;

Figure 3 is a detail view of the bumper with the table;

Figure 4 is an enlarged vertical section through a portion of the frame, track and carriage showing the manner of mounting the same;

Figure 5 is a detail top plan view of a portion of a carriage;

Figure 6 is an elevation of the same;

Figure 7 is a vertical section taken on line 7—7 of Figure 5;

Figure 8 is a section through the table showing the construction of the saw throat.

In the drawings 1 indicates a supporting frame on which is disposed a horizontally disposed frame 2 and while in the drawings I have shown these members formed separate, it, of course, is understood that they can be formed as a unit.

The frame 2 along each end is provided with a vertically disposed rib 3 and a horizontally disposed rib 4. The rib 3 is provided with threaded bores 5 adapted to receive bolts or screws 6 which extend through slots 7 formed in track 8, which is provided with a substantially V-shaped tread portion 9, the lower edge of said track being adapted to be engaged by a bolt 10 mounted in a threaded bore 11 of the horizontally disposed rib 4 so that the track can be adjusted up and down. As one of these means for fastening the same is arranged at each end of the track, of course, it can be clearly understood that the track can be adjusted to any inclined position desired for the purpose hereinafter fully described.

Arranged above the frame 2 is a table 12 which is provided adjacent each end with a substantially inverted U-shaped portion 13 having the legs thereof formed with oppositely disposed openings 14 in which are adjustably mounted cone members 15 and 16 for the balls 17 on which are mounted rollers 18 having peripheral grooves corresponding in shape to the tread of the track 9 so that the table will be mounted on ball bearings so as to travel back and forth freely.

The cone member 16 is provided with a threaded stem 16′ which works into a threaded bore 15′ of the cone member 15 so as to adjust the cone members in respect to one another, a set screw 19 being mounted in the end of the bore 15′ for preventing the same from turning after being adjusted in the proper position.

After the cone members have been set in the proper positions to support the balls and grooved rollers, they can be locked in the hanger formed by the inverted U-shaped portion of the table by the set screw 20 mounted in the threaded bore 21 of one of the legs of the hanger as clearly shown in Figure 4. This provides means for mounting the table on ball bearing grooved rollers mounted in hangers so as to protect the ball bearings from the sawdust and also provides means so that the table can be squared in respect to the saw by adjusting the cone members in the hangers.

The table is provided with a central throat 22, the top portion of which is closed by the convexed insert of Babbitt metal 23 having a slot 24 to receive the saw as will be hereinafter fully described. The insert extends upwardly beyond the top surface of the table so as to slightly undercut the material, which is of especial advantage when cutting flooring.

An adjustable gauge 25 is arranged on the table against which the material is placed and held while being cut as clearly shown in Figures 2 and 3.

The throat 22 is provided with a depending bifurcated lug 26 which straddles a rod 27 provided with threaded ends mounted in threaded bores formed in bosses 28 of the frame 2, said rod being surrounded by coil springs 29 at each end carrying washers 30 at their free end which are adapted to be engaged by the bifurcated lug 26, the springs being adjusted on the rod by nuts 31 to limit the forward and backward movement of the table. These springs act as buffers so as to eliminate the shock when the table has reached its end of movement in both directions.

In practice the table is set at an incline so that after it has been forced towards the saw, it will return by gravity and by having the spring arranged so that the bifurcated lug engages the same at the end of this movement, when released the tension of the spring has a tendency to start the table so that the table moves back automatically.

The end of the table is provided with bifurcated portions 33 to provide means for connecting extension members, not shown, to increase the length of the table in cutting long material such as flooring and the like.

Mounted on the frame 2 is a standard 34 which extends upwardly at an angle of sixty degrees in respect to the table surface in which is adjustably mounted the support of an electric motor 35 to the shaft of which is mounted a circular saw 36 enclosed in a housing 37 by means of which the saw can be adjusted and is protected by the guard so as to prevent the operator from being injured. The particular construction of the saw and mounting is clearly described in the original application.

The frame 2 and table are of skeleton form so that a clearance is formed for the pieces of material cut off from the end of the strip in order to allow the same to drop into a chute and by having the throat constructed as shown, the sawdust can be readily drawn away in the usual manner.

In the operation of the saw as herein shown and described which is especially adapted to be used for trimming the ends of flooring where it is desired to have an exceptionally clean and true cut, the strip of material is placed on the table by the operator and as the electric motor is driving the circular saw at a high rate of speed, when the strip is forced into contact with the cutting edge, the strip is cut at right angles and by having the convexed Babbitt throat extending upwardly beyond the surface of the table, the ends are slightly undercut so that when the ends are placed together, a square joint closed at the top surface is formed.

The table is mounted upon grooved rollers which in turn travel on adjustably mounted tracks, the tracks being adjustable for changing the inclination thereof in order to allow the table to be set so that in the operation of the sawing machine, when the operator places a piece of material against the gauge thereof he forces the table towards the saw against the force of gravity so that when the piece of material has been cut and the table released, it will return to its normal position. The rollers being adjustable allows the table to be adjusted and trued so that the material on the table will be maintained at right angles to the saw at all times and by having a throat formed of Babbitt metal, the throat can be removed and a new one inserted as it wears.

This is a divisional application of my application for sawing machine, filed February 21, 1927, Serial No. 169,993, Patent No. 1,794,758, patented March 3, 1931.

What I claim is:

A sawing machine of the kind described comprising a frame a pair of inclined V-shaped tracks adjustably mounted at each end of said frame, a table having depending inverted U-shaped portions, the legs thereof being provided with oppositely disposed openings, cone members adjustably mounted in said openings, means for locking said members in adjusted position, rollers mounted on said cone members having substantially V-shaped grooves adapted to travel on the V-shaped tracks, a circular saw mounted on said frame, said rollers being mounted to move laterally for adjusting said rollers to true said table in respect to said saw.

In testimony whereof I hereunto affix my signature.

IRVIN F. DITTMAR.