May 14, 1929. L. G. HAASE 1,713,225

CONCRETE BENCH AND TABLE

Filed Sept. 24, 1924

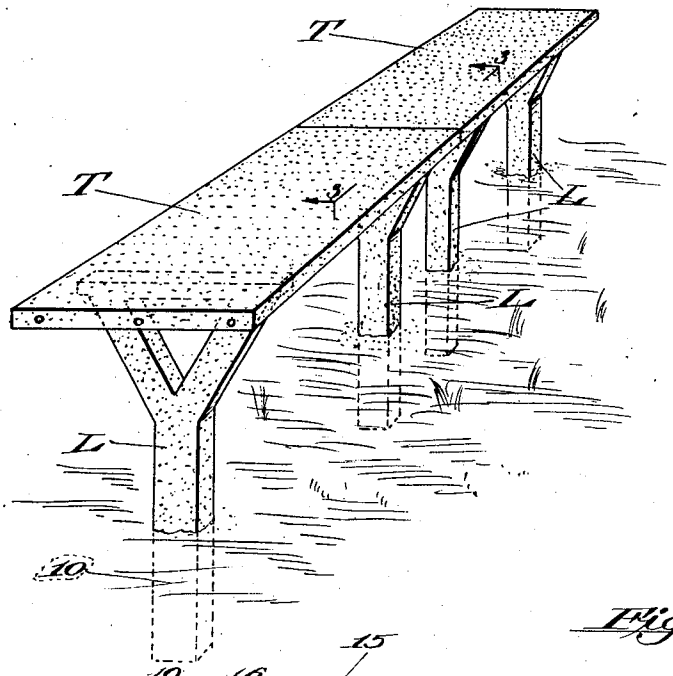

Fig. 1.

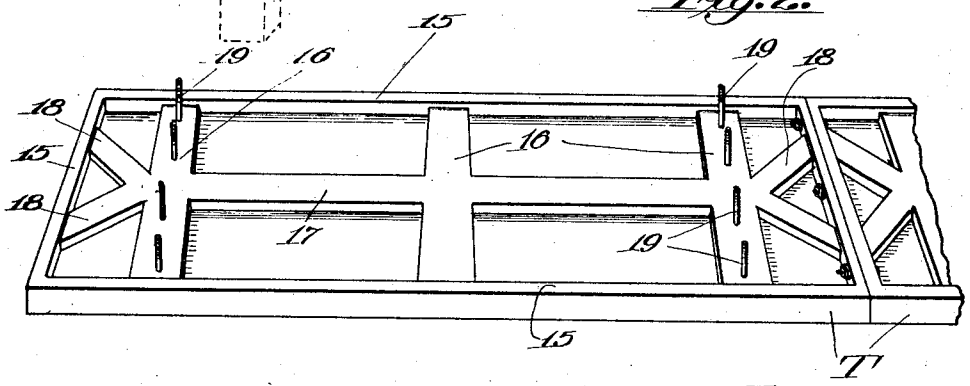

Fig. 2.

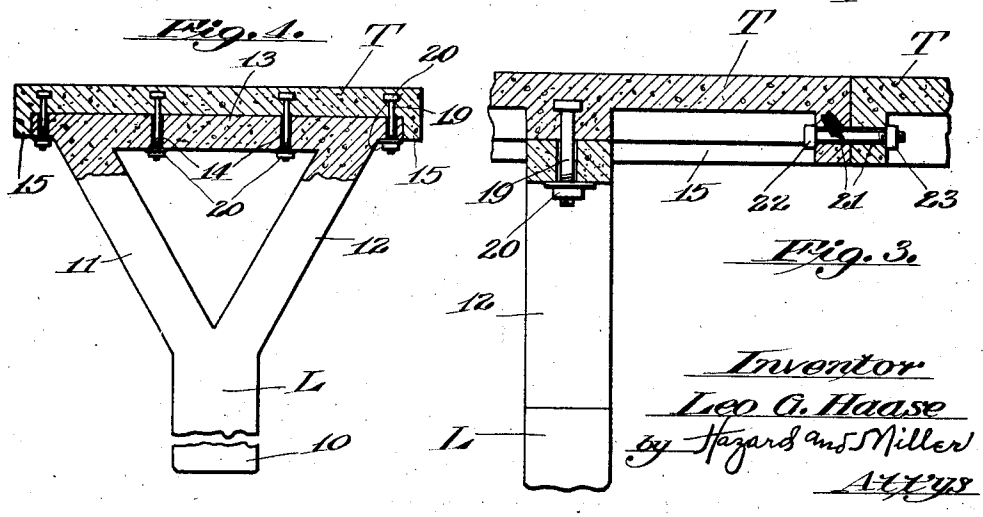

Fig. 3.

Inventor
Leo G. Haase
by Hazard and Miller
Attys

Patented May 14, 1929. 1,713,225

UNITED STATES PATENT OFFICE.

LEO G. HAASE, OF PASADENA, CALIFORNIA.

CONCRETE BENCH AND TABLE.

Application filed September 24, 1924. Serial No. 739,613.

This invention relates to improvements in concrete tables and seats.

It is an object of this invention to provide an improved concrete support which may be either a table or a seat and which is primarily designed to be used in automobile tourist camps, picnic places, or other similar localities.

A still further object of this invention is to provide an improved concrete support, designed to be permanently mounted in place, which will have its legs so formed that they will not interfere with the legs of the diners if the support is to be used as a table, and which will facilitate the cleaning up of refuse beneath the support.

With the foregoing and other objects in view which will be made manifest in the following detailed description and pointed out in the appended claim, reference is had to the accompanying drawings for an illustrative embodiment of the invention, wherein:

Figure 1 is a perspective view of the improved concrete support,

Fig. 2 is a perspective view showing the top of the support as having been removed and turned up side down,

Fig. 3 is a vertical section taken substantially upon the plane 3—3 of Fig. 1, and

Fig. 4 is an end elevation of the improved support, parts being broken away and shown in section.

Referring to the accompanying drawings wherein similar reference characters designate similar parts throughout, the improved support consists of a top T, and a pair of legs L. Each of the legs L is substantially Y-shaped in form, and is adapted to have its lower extremity 10 imbedded in the ground. The arms 11 and 12 diverge upwardly and are connected by a top bar 13 in which apertures 14 are formed. The legs are formed of concrete and may be reinforced, if desired, in any conventional manner. The top T is also formed of concrete which may be reinforced, and has depending flanges 15 formed around its edges. Reinforcing ribs may be formed upon the under side of the top T, and in the present instance, three transverse ribs 16 are shown which are connected by a longitudinal rib 17. A pair of diverging ribs 18 may be formed between the outer transverse rib 16 and the end flanges 15. A plurality of bolts 19 have their heads 20 imbedded in the top T and extend downwardly from the bottom thereof through the apertures 14 in the top bars 13. Suitable nuts 20 are threaded on to the ends of the bolts 19 so as to rigidly secure the top T to the legs L.

From an inspection of Fig. 4, it will be noted that the side flanges 15 abut the ends of the top bars 13, so that the top T closely fits upon the top bars 13.

If it is desired to form a table of considerable length, a plurality of pairs of legs L may be arranged in alignment and tops T may be placed upon the legs so that they may have their ends abutting each other. In this form of construction, apertures 21 are formed in the end flanges 15 of the tops T, and bolts 22 extend through these apertures and are rigidly secured by tightening nuts 23.

As will readily be understood, the support may be either in the form of a table, as shown in Fig. 1, or in the form of a bench to be used in conjunction with the table. Obviously, if a bench is to be provided, the legs L will be shorter and the tops T will be very narrow, as compared with the table top.

By making the legs L in Y-shaped form, there are merely two columns or supporting members which support the top T, so that refuse of all kinds may be readily withdrawn or swept up from beneath the support. Also, as will readily be appreciated, this form of leg construction allows diners to be seated the complete length of the table without having the legs L interfere with the diners' knees.

In using the support as a bench, the top T should be preferably made of wood or some other equivalent heat insulating material. If desired, the top of the table and the top of the benches may both be formed of wood instead of concrete. However, in the preferred form, the table top is of concrete and the bench tops are of wood.

It will be understood that various changes in the detail of construction may be made without departing from the spirit of the invention as defined by the appended claim.

I claim:

A support comprising a concrete top having depending flanges around its edges, a

pair of concrete legs, each leg being in the form of a Y-shaped member having its lower portion imbedded in the ground, a top bar extending across the arms of each leg, apertures formed in said top bar, bolts imbedded in said top and projecting from the under side thereof through said apertures, and nuts threaded on to said bolts for securing said top to said legs, the side flanges of said top abutting the ends of said top bars.

In testimony whereof I have signed my name to this specification.

LEO G. HAASE.