June 7, 1927. 1,631,232

S. SZIGETHY

CANDELABRUM

Filed June 7, 1926

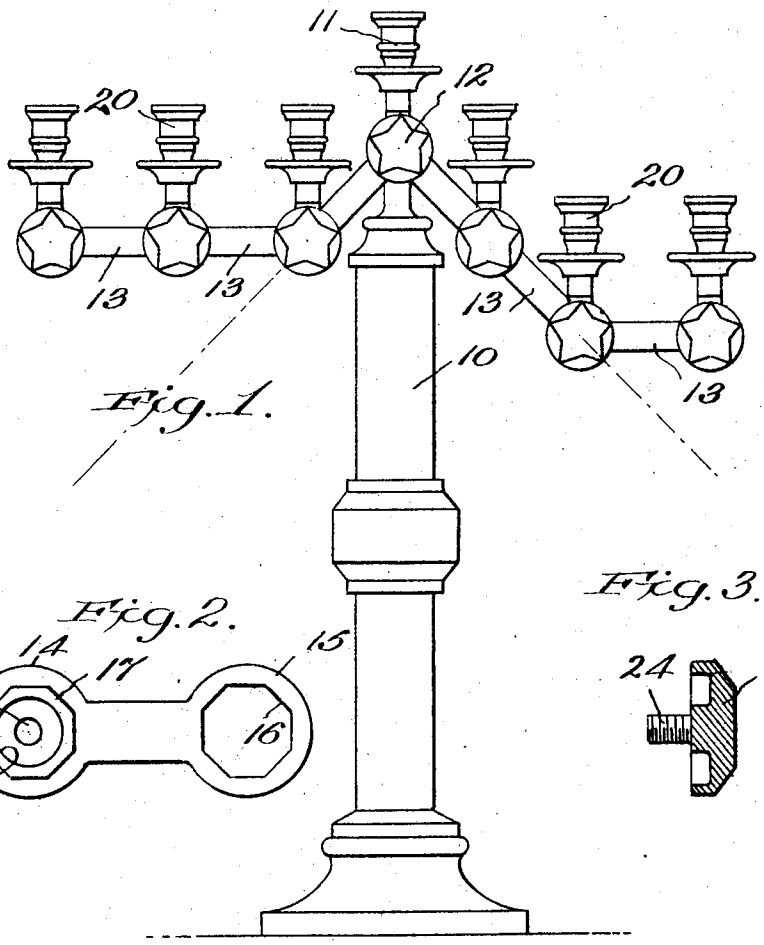

Fig. 1.

Fig. 2.

Fig. 3.

Fig. 4.

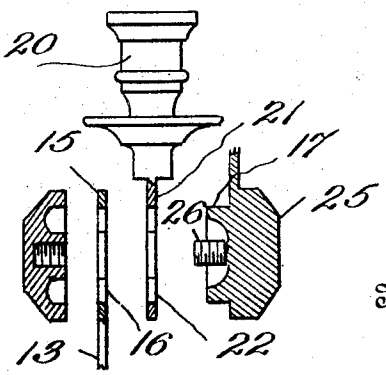

Fig. 5.

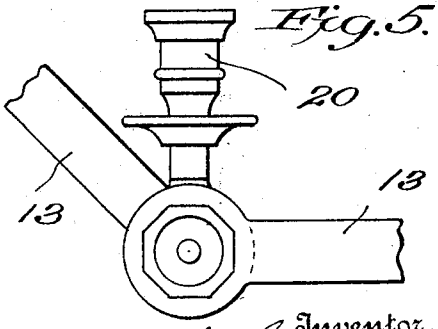

Inventor
Stephen Szigethy
By his Attorney
Howard Kaye

Patented June 7, 1927. 1,631,232

UNITED STATES PATENT OFFICE.

STEPHEN SZIGETHY, OF NEW YORK, N. Y.

CANDELABRUM.

Application filed June 7, 1926. Serial No. 114,127.

The present invention relates to an improved form of candelabrum more particularly for ecclesiastical use; and the principal object of the invention is to provide a candle holder having a plurality of branches of an ornamental character so constructed and arranged as to be readily and easily adjusted in a great variety of positions, as may be convenient in any case, or to suit the taste of the user.

Candelabra having this general object in view have been hitherto provided, but these are not cheap to construct or simple for an unskilled person to manipulate.

My present invention lends itself to cheap construction and easy operation by any unskilled user.

One simple embodiment of my invention, in a preferred form, is illustrated in the accompanying drawings, wherein, Figure 1 is a front elevation of a two-branched candelabrum made in accordance with my invention, Figure 2 is a view in elevation of a single arm element, Figure 3 is a sectional view of the male nut preferably used at one of the joints, Figure 4 is a detail view in elevation of a single candle holder, showing the parts of a modified form of supporting joint in section and separated for greater clearness, and Figure 5 is a view on an enlarged scale in elevation of a single candle holder and its supporting arms at the joint with one nut removed.

The central standard of my improved candelabrum is shown in Figure 1 at 10, and at the top of this standard a candle holder 11 is preferably placed, carried upon an adjustable joint 12, from which radiate a number of candle carrying arms (in this case two, although more might be used of course) all of which are preferably adjustably supported by the joint 12 constructed on the principle hereinafter described with reference to Figures 2 and 3.

The candle-carrying arms consist of a plurality of similar units or elements, separably united in a series capable of taking a great variety of positions. Each element preferably comprises a link 13, preferably a flat plate of metal, having enlargements 14 and 15. One of these enlargements has a polygonal opening 16, and the other enlargement has a similar polygonal boss 17, having a circular cavity 18 and a central opening 19, which may or may not be threaded. The boss 17 of each element is made to fit snugly into the polygonal opening 16 of the next element.

Each candle holder comprises a socket 20, under which is a thin metal plate support 21 having a polygonal opening 22 which snugly fits over the corresponding boss 17 (see Figure 4).

As shown in Figure 4, which illustrates a modification, the separable male nut, shown at 23 in Figure 3, having a male screw 24, is made integral with one end of the arm element shown in Figure 2, and is represented by the fixed body 25 and a screw 26. The polygonal boss 17 fits the opening 22 in the candle holder support 21 and also the identical polygonal opening 16 in the arm extension 15.

In the particular embodiment of my invention herein illustrated, the polygonal openings and bosses shown are octagons, and therefore in putting a candelabrum together, in this form, the various elements may be assembled in various positions varying in angular position by forty-five degrees or multiples thereof. My invention is not limited to the use of the octagon, but other regular polygons may be used in the same way. In each case, of course, the candle holder will be placed so that the socket 20 is in a vertical position.

In securing the successive elements of the arms, together with the candle holders, at any one joint, the polygonal openings 16 and 22 of the arm element and candle holder respectively (see Figure 4) are fitted over the polygonal boss 17 at one end of the next arm.

If the male nut is integral with the arm, as in Figure 4, the screw 26 will then be ready to receive the female nut 27, which acts to secure the entire joint firmly, when screwed home on the male screw 26 or 24. Figure 1 shows one of a great number of possible positions which the arms may be given, since each element 13 can be given any one of a number of positions differing by forty-five degrees or multiples thereof.

What I claim is—

1. A candelabrum having arms composed of flat links provided with polygonal openings in combination with means fitting into

said openings and adapted to secure the links in different angular positions with respect to each other.

2. Apparatus as in claim 1 in combination with candle holders having supports provided with polygonal openings identical with those in the links which compose the arms and adapted to co-operate with the means for securing the links together.

In testimony whereof I have hereto affixed my signature on this 4th day of June 1926.

STEPHEN SZIGETHY.