Sept. 18, 1923. 1,468,397

A. T. RADKE ET AL

MACHINE FOR HANDLING MOTORS AND TESTING BEARINGS THEREOF

Filed April 13, 1922 2 Sheets-Sheet 1

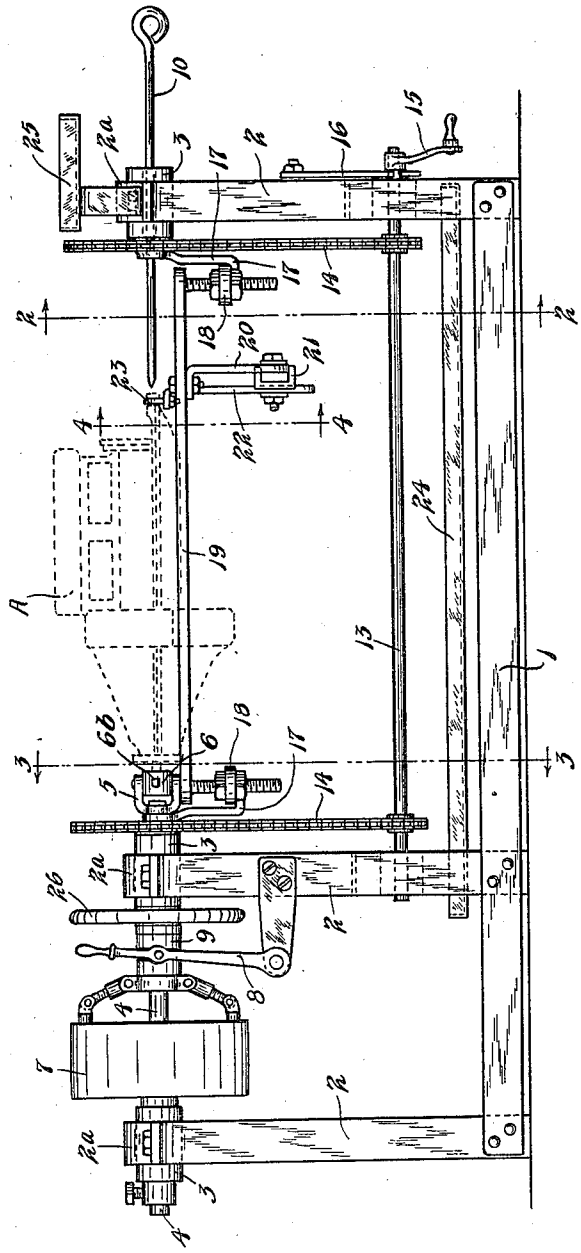

Fig. 1.

INVENTORS.
AUGUST T. RADKE.
JOHN KLANCKE.
BY THEIR ATTORNEY
James F. Williamson

Sept. 18, 1923. 1,468,397

A. T. RADKE ET AL

MACHINE FOR HANDLING MOTORS AND TESTING BEARINGS THEREOF

Filed April 13, 1922 2 Sheets-Sheet 2

Fig. 2.

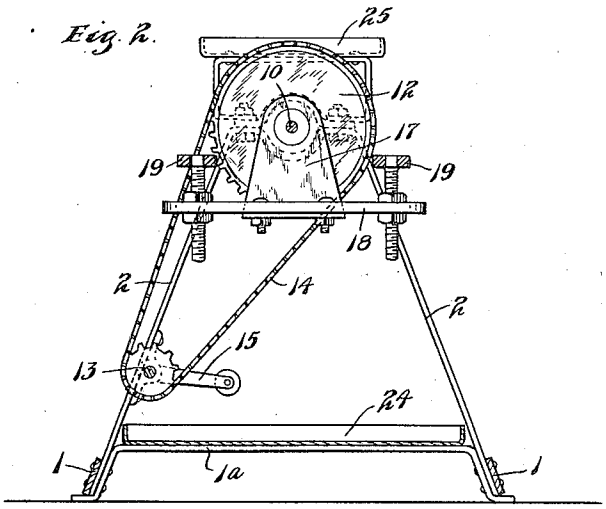

Fig. 3.

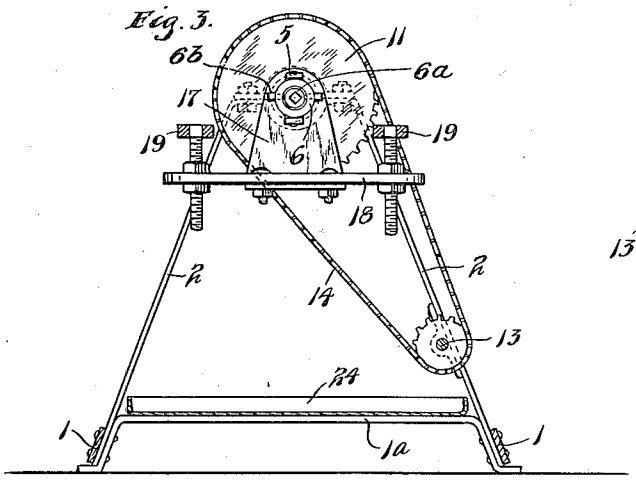

Fig. 5.

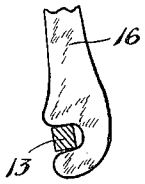

Fig. 4

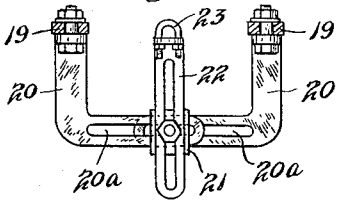

INVENTORS
AUGUST T. RADKE.
JOHN KLANCKE.
BY THEIR ATTORNEY
James F. Williamson

Patented Sept. 18, 1923. 1,468,397

UNITED STATES PATENT OFFICE.

AUGUST T. RADKE AND JOHN KLANCKE, OF HAMBURG, MINNESOTA.

MACHINE FOR HANDLING MOTORS AND TESTING BEARINGS THEREOF.

Application filed April 13, 1922. Serial No. 552,286.

To all whom it may concern:

Be it known that we, AUGUST T. RADKE and JOHN KLANCKE, citizens of the United States, residing at Hamburg, in the county of Carver and State of Minnesota, have invented certain new and useful Improvements in Machines for Handling Motors and Testing Bearings Thereof; and we do hereby declare the following to be a full, clear, and exact description of the invention, such as will enable others skilled in the art to which it appertains to make and use the same.

This invention relates to a machine for handling motors and particularly to a machine adapted to support an internal combustion motor for various operations. Such motors are often overhauled to place the same in first class condition and during such repairs, the bearings for the crank shaft are usually relined and such bearings brought to a properly surfaced condition. Other operations performed at such times include valve grinding and valve setting.

It is an object of this invention to provide a machine having a rotating means for receiving and turning the crank shaft of the motor and also having an independently rotatable frame for supporting and holding the frame of the motor.

It is a further object of this invention to provide such a frame comprising a plurality of longitudinally and transversely adjustable members adapted to hold various types and sizes of motors.

It is another object of the invention to provide efficient and convenient means for turning the motor supporting frame and for holding the same in various degrees of rotated movement.

These and other objects and advantages of the invention will more fully appear from the following description made in connection with the accompanying drawings in which like reference characters refer to the same parts throughout the different views, and in which,

Fig. 1 is a view of the machine in front elevation, a motor being shown supported therein by dotted lines;

Fig. 2 is a vertical section taken on the line 2—2 of Fig. 1, as indicated by the arrows;

Fig. 3 is a section taken on the line 3—3 of Fig. 1, as indicated by the arrows;

Fig. 4 is a vertical section taken on the line 4—4 of Fig. 1, as indicated by the arrows; and

Fig. 5 is a fragmentary view on an enlarged scale of certain parts of the machine.

Referring to the drawings, the machine comprises a suitable base member having longitudinally extending members 1 and transversely extending end members 1^a. Firmly secured to and rising from the base are vertical members 2, these members converging toward their upper ends where they are formed as capped bearings having the cap members 2^a bolted thereto. Suitable bearings 3 are held in place between the members 2 and 2^a, and a shaft 4 is journaled in the adjacent bearings 3 at one end of the machine, as shown at the left on Fig. 1. This shaft is held in place at its outer end by a collar attached thereto by a set screw and carries at its inner end a fork member 5 between the arms of which is pivoted a supporting socket member 6, which socket, in turn, carries therein a smaller socket member 6^a pivoted thereto by pivot members 6^b on an axis at right angles to the pivotal axis of member 6. The shaft 4 is provided with a belt pulley 7 formed as a clutch pulley of any usual or ordinary type having a movable clutch member adapted to be moved by either one of a pair of levers 8 located at each side of the machine and secured to a shaft pivoted in suitable bearings projecting from the member 2, only one of said bearings and levers being shown. A suitable clutch fork adapted to engage a groove in the sliding sleeve 9 mounted on the shaft 4 is moved by the levers 8 to engage or disengage the clutch member with the pulley 7 and thus connect and disconnect the shaft 4 thereto. In the bearing 3 at the other end of the machine shown at the right in Fig. 1, is mounted a longitudinally movable centering device 10 axially alined with shaft 4, formed as a handle at its outer end by which it is moved longitudinally of the machine.

Mounted for rotation on the shaft 4 between the member 5 and its adjacent bearing 3 is a sprocket wheel or similar rotatable member 11 and mounted for rotation in the bearing 3 about the member 10 immediately inside of the bearing 3 is a similar sprocket or rotating member 12. A shaft 13 is journaled for rotation in suitable bearings secured to the members 2 at one side of the machine which shaft is provided with sprocket pinions alined with the members 11 and 12 and chains 14 connect said members and pinions. The shaft 13 is provided with a hand crank 15 at one end of the frame and the said shaft is made of square section on its projecting end and adapted to be engaged by a swinging hook or pawl member 16 provided with a notch therefor adapted to hold the shaft 13 against rotation. With this structure it will be seen that by turning the crank 15, the members 11 and 12 will be rotated about the axis of members 4 and 10 and independently of rotation of shaft 4.

Rigidly secured to and extending at one side of the members 11 and 12 are reversely disposed members 17 having horizontal projecting parts to which are rigidly bolted bars 18 extending at one side of and transversely of the axis of members 4 and 10. Passing through the slots in the bars 18 are the threaded shanks extending at right angles to and firmly secured to slotted bars 19, which bars extend longitudinally of the machine between the bars 18. The said shanks are held in adjusted position in the bars 18 by suitable lock nuts disposed at each side of said bars. A pair of members 20 formed of flat bars have their ends bent to extend along and contact the bars 19 and be connected thereto, said ends being apertured and being connected to said bars by bolts passing through said apertures and the slots in bars 19 whereby the said members can be moved along the bars 19 and firmly clamped thereto by the bolts. The members 20 extend away from the bars 19 and are formed as angle members with overlapping ends having slots 20^a therein. A U-shaped member 21 embraces the overlapped ends of the bars 20 and is slotted on its opposite side to receive a bar 22, the members 20, 21 and 22 being connected by a single headed and nutted bolt extending through the slots in members 20 and 22 and through an aperture formed in the member 21. The members 20 are thus connected to form a yoke from the central portion of which the member 22 extends toward the axis of the members 4 and 10 and this member 22 is bent laterally at its upper end and receives the threaded ends of a clevis or U-shaped clamping member 23, the ends of which are provided with suitable adjusting nuts.

A pan 24 is provided and supported on the base member 1^a for catching and holding the oil, grease and other refuse from the motor. A pan 25 is also secured in a bracket rising from the member 2^a at the right hand end of the machine, this latter pan forming a convenient holding means for nuts, screws, and other small parts of the motor as well as for tools.

In operation, the motor of the automobile type will usually be supported in the machine as illustrated by A in dotted lines in Fig. 1. The shaft of the motor will have one end disposed in the socket pivoted inside of socket 6 and the other end of the motor shaft will be supported and centered by the member 10 engaging the end thereof. The frame on the motor will rest upon the bars 19 and will be clamped to said bars by having bolts passing through the attaching lugs of the motor and through the slots in said bars. The end of the motor shaft held by member 10 may be additionally steadied and clamped in position by the member 22, the shaft passing through the yoke 23 secured to the end thereof. The bars 19 can be transversely adjusted to suit the attaching lugs of the motor, by moving the projecting threaded ends thereof in the bars 18, and by adjusting the members 20. The member 22 can be suitably brought to the desired position by moving the same lengthwise in the member 21. After the motor has been secured to the supporting frame formed by the members 17, 18 and 19, various operations can be performed thereon. If it is desired to turn the motor to various positions, the pawl 16 will be released and the motor supporting frame turned by turning the crank 15 which will, in turn, rotate the members 11 and 12 through the chains 14. It will be noted that the members 11 and 12 are much larger in diameter than the pinions on shaft 13 and that said shaft can be held in position at its quarter turn thereof by the pawl 16. The motor A can, therefore, be held in a large number of different rotatable positions and in different degrees of rotative movement. When the motor bearings have been suitably placed and finished, the motor shaft can be rapidly turned by power applied to the pulley 7, the rotation being controlled by the operation of the clutch member for said pulley manipulated by levers 8. The motor shaft can thus be driven as long as desired before the motor is taken out of the machine and the said shaft and its bearings brought to the proper bearing condition before the motor is again placed in the automobile. When the bearings are first being adjusted it is desired to turn the motor shaft to ascertain the fit thereof. For this purpose, a hand wheel 26 is provided on shaft 4, which can be grasped and turned to thus turn the motor shaft. The operator can usually tell by the resistance to the turning of the shaft or by the "feel" of the wheel 26 just how the

bearings fit. After being thus adjusted the motor shaft is run at high speed to test out the bearings. The operations on the motor can thus be entirely completed without the necessity of re-mounting the same in the automobile and then running the same to bring the bearings to proper condition. It will, of course, be apparent that many other operations can be conveniently performed on the motor while the same is held and manipulated in the machine.

From the above description it is seen that applicant has provided a simple and efficient device for manipulating a motor during operations thereon. The parts of the machine are comparatively few, quite rugged in construction and the machine can be made without great expense.

It will, of course, be understood that various changes may be made in the form, details and arrangement of the parts without departing from the scope of applicant's invention which, generally stated, consists in the matter shown and described and set forth in the appended claims.

What is claimed is:

1. A device of the class described having in combination, a frame, spaced axially alined supporting means thereon adapted to receive and support a motor shaft, a frame disposed at one side of the axis of said supporting means and mounted for independent rotation about said axis adapted to support the motor frame.

2. The structure set forth in claim 1, means for rotating said supporting means, and means for rotating said frame and holding the same in various positions of rotated movement.

3. The structure set forth in claim 1, said frame comprising spaced members extending at one side of the axis of said supporting means and transversely thereof, and spaced members extending longitudinally between said first mentioned members and adjustable transversely thereof.

4. A device of the class described having in combination, means for holding and turning one end of a motor shaft, means for centering and supporting the other end of said shaft, means for supporting the motor frame mounted for rotation about the axis of said first mentioned means independently thereof, said frame comprising transversely adjustable members extending longitudinally between the two first mentioned means.

5. A device of the class described having in combination, a frame comprising spaced bearing members, a shaft rotatable in one of said members comprising means for receiving and holding one end of a motor shaft, a centering device mounted in the other of said members adapted to engage and hold the other end of the motor shaft, a rotatable member mounted to rotate in each of said members independently of said first mentioned means, a transversely extending member secured to each of said latter rotatable members, and spaced longitudinal members extending between and transversely adjustable on said last mentioned members.

6. A device of the class described having in combination, a frame comprising a base, upstanding members at one end thereof forming bearings, a shaft journaled in said bearings having at its inner end means for engaging and rotating one end of a motor shaft, a member upstanding from the other end of the frame and having therein longitudinally movable centering means adapted to engage and hold the other end of a motor shaft, said first mentioned shaft and said means having a common axis, a rotatable member mounted to rotate about said shaft about the inner end thereof, a member mounted to rotate about said centering means adjacent the bearing thereof, slotted bars secured to said last mentioned rotatable means extending at one side of and transversely of said axis, and longitudinally spaced bars extending between said bars and transversely adjustable therein.

7. The structure set forth in claim 6, and clamping carrying yoke members extending between said last mentioned bars and adjustable longitudinally thereof.

8. The structure set forth in claim 7, said yoke member comprising transversely adjustable members, and a member disposed centrally of the yoke and adjustable transversely thereof.

9. The structure set forth in claim 8, the members of said yoke and said last mentioned member being secured in adjusted position by a common means.

10. A device of the class described having in combination a frame comprising longitudinally spaced bearing members, means mounted in one of said bearings for engaging and turning one end of a motor shaft, means mounted in the other bearing for engaging and holding the other end of the motor shaft, said means being disposed about a common axis, sprockets mounted adjacent said bearings for rotation about said axis independently of said means and having secured thereto at one side of said axis transversely extending members, spaced longitudinal members extending between said members and transversely adjustable therein, and an auxiliary means for holding one end of the motor shaft longitudinally adjustable on said last mentioned members and transversely adjustable thereof.

11. A device of the class described having in combination, a frame having spaced bearing members, means disposed in said bearings about a common axis for holding the ends of the motor shaft, members rotatable

about said axis adjacent said bearings, a frame rigidly secured to said last mentioned members for supporting and holding the motor frame, a shaft journaled in said frame parallel to said axis and means thereon connected to said last mentioned rotatable members for turning the same, and means for turning said shaft and holding the same in different positions of rotation.

In testimony whereof we affix our signatures.

AUGUST T. RADKE.
JOHN KLANCKE.