(No Model.)

N. E. SMITH.

PIPE COUPLING.

No. 590,342. Patented Sept. 21, 1897.

Fig. 1.

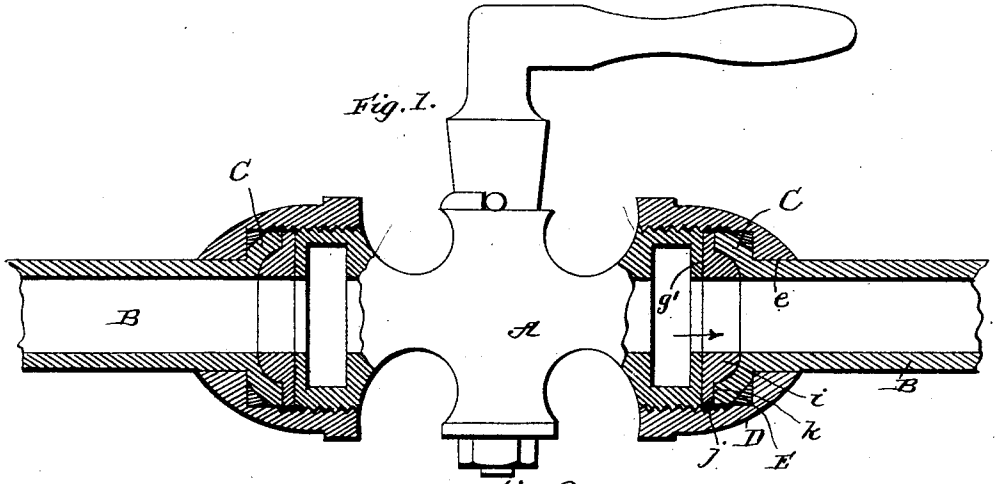

Fig. 2.

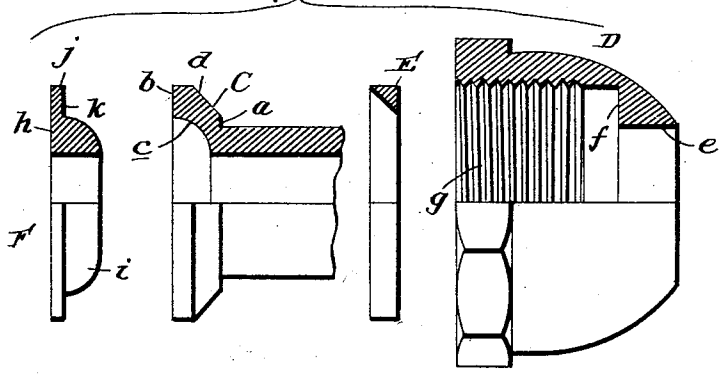

Fig. 3.

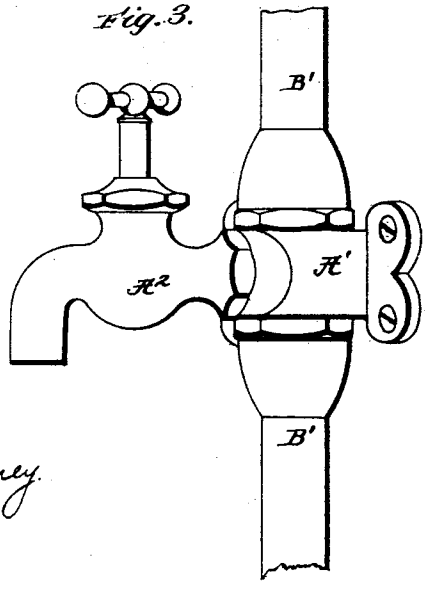

Witnesses:
C. H. Rauder
Jessie G. Croney

Inventor
N. E. Smith
By James J. Sheehy
Attorney

THE NORRIS PETERS CO., PHOTO-LITHO., WASHINGTON, D. C.

UNITED STATES PATENT OFFICE.

NATHANIEL E. SMITH, OF JERSEY CITY, NEW JERSEY.

PIPE-COUPLING.

SPECIFICATION forming part of Letters Patent No. 590,342, dated September 21, 1897.

Application filed June 17, 1897. Serial No. 641,166. (No model.)

To all whom it may concern:

Be it known that I, NATHANIEL E. SMITH, a citizen of the United States, residing at Jersey City, in the county of Hudson and State of New Jersey, have invented certain new and useful Improvements in Pipe-Couplings; and I do declare the following to be a full, clear, and exact description of the invention, such as will enable others skilled in the art to which it appertains to make and use the same.

My invention relates to improvements in pipe-couplings of that class which are designed for connecting a lead or soft-metal pipe-section with a hard-metal pipe-section or with another lead pipe-section, and which do away with "wiping" the joint, and thus dispense with the skilled labor necessary to the same.

The invention will be fully understood from the following description and claims when taken in conjunction with the annexed drawings, in which—

Figure 1 is a view, partly in section and partly in elevation, illustrating my improved couplings as connecting two soft-metal pipe-sections and a cock. Fig. 2 comprises enlarged views, partly in elevation and partly in section, of several of the parts making up said coupling; and Fig. 3 is an elevation illustrating my improved couplings as connecting two soft-metal pipe-sections with a hard-metal union or pipe-section to which a faucet is connected.

Before describing the details of construction I would say that I am well aware that it is not new to employ a button with a circumferential flange to be received between the ends of two sections of pipe, the ends of the pipes being simply flared either by the button itself or by driving a conical implement therein, and I therefore make no claim to the same.

Referring by letter to the said drawings, and more particularly to Figs. 1 and 2 thereof, A indicates a cock of brass or other comparatively hard metal which has the opposite ends of its body exteriorly threaded, as shown, and B indicates pipe-sections of lead or other soft metal which have collar-flanges C at their ends contiguous to the ends of the cock A, as shown. These collar-flanges C are formed on the pipe-section B by upsetting the metal of said pipe or by any other mode which does not entail forcing the metal thereof upwardly by driving an implement larger than the bore of the pipe into the end of the same, as is commonly practiced by plumbers.

In virtue of the collar-flanges C being formed in the manner stated it will be appreciated that they are rendered very strong, and when they are subjected to pressure they will not tend to give inwardly as will those flanges which are simply formed by introducing a conical implement into the end of a pipe-section and forcing the same outwardly. Each of the collar-flanges C has as essential characteristics the comparatively broad exterior surface *b* on its side contiguous to the end of the cock A, which is square to the length of its section B and the interior bearing-surface *c*, and said collar C is also provided, in preference, with the exterior square surface *a* on its side contiguous to the body of the section B and the beveled exterior surface *d*, for a purpose presently described. The interior surface *c* of the collar-flange C is preferably concave, as shown, for reasons which will presently appear; but I do not desire to be understood as limiting myself to such form, as in some cases it may be tapered or gradually reduced in diameter until it merges into the interior surface of the body of the pipe-section.

The couplings for effecting connection between the pipe-sections B and the ends of the body of cock A are identical in construction, and therefore a description of the one shown at the right of Fig. 1 and also shown in detail in Fig. 2 will suffice for both. Among other things said coupling comprises the thimble or pipe connection D, which is of hard metal. This thimble is of a diameter at one end to snugly receive the lead pipe-section B, as indicated by *e*, and it is interiorly shaped to snugly engage the collar-flange C, being preferably provided with the square interior shoulder *f* to bear against the exterior square surface *a* of the collar-flange C and with the interiorly-threaded portion *g* to receive the threaded end of the cock A, as shown.

Between the shoulder *f* and side wall of the thimble D and the beveled surface *d* of the

collar-flange C is interposed a washer E, of brass or other suitable hard metal, which has its interior surface beveled in conformity to the surface *d* of the collar-flange, for a purpose presently described, and between the end of the soft-metal pipe-section B and the end *g'* of the cock A, which is square to the length thereof, is interposed a button or annulus F, of lead or other soft metal. The said button or annulus F has one of its sides flat, as indicated by *h*, to bear against the square surface *g'* of the cock A, while its other side *i* is preferably convex in conformity to the interior surface *c* of the collar-flange C, and it is provided with the peripheral flange *j*, one side of which is flush with the flat surface *h*, while its other side *k* is square, so as to bear against the square surface *b* of the collar-flange C, as shown.

In effecting a connection between pipe B and cock A the thimble or connecting-piece D is placed on the pipe-section B, with the brass washer E interposed between it and the beveled surface *d* of the collar-flange C, and the button or annulus F is seated in the end of the pipe-section B. The said end of the pipe B is then placed in proximity to the end of the cock A, and the thimble D is turned on said cock A until the parts are drawn very tightly together, as shown in Fig. 1. When this is done, it will be observed that the flat square face *h* of the button F being of soft metal will accommodate itself to all irregularities in the square end *g'* of the hard-metal cock A, and in consequence leakage between the surfaces *g'* and *h* will be effectually prevented. At the same time it will be observed that the button F and the collar-flange C will be pressed so tightly together as to be really one homogeneous piece, which will preclude leakage between them, and this without either one of them losing its original shape and without the button being pressed into the soft-metal section B beyond the position shown, which would materially weaken the coupling and impair its efficiency as a preventer of leakage.

The soft-metal parts are prevented from losing their original shape under the great pressure to which they are subjected, and the button F is prevented from being pressed in the direction indicated by arrow into the soft section B beyond the position shown by the manner described of forming the collar-flange C of said section B and the fact that the collar-flange is thoroughly supported by the button F, which bears against the interior surface *c* and exterior square surface *b* thereof, and the thimble D, which bears against the other side of said collar-flange. In this way it will be seen that notwithstanding the fact that the parts are pressed so tightly together as to form a joint as perfectly water-tight as a wiped joint the original shape of all of the parts is preserved, which materially conduces to the efficiency and strength of the coupling. Again, it will be appreciated that the coupling may be effected much more quickly and easily than a wiped joint and without the employment of the skilled labor necessary to the making of such a joint, which is an important desideratum. The brass ring E, described, is preferable, because it increases the square surface against which the shoulder *f* of the thimble D bears, and thus enables the said connection to better prevent the collar-flange C from being pressed out of its original shape. Said ring E is not, however, essential, and it may be omitted when desired. The convex surface *i* of the button F is preferable because it assists the flange *j* in preventing the button from working farther into the lead pipe B than the position shown and assists in supporting the collar-flange C; but it also is not essential, and when desired the protuberance of the button may be made angular.

While I have shown my improved couplings as connecting two soft-metal pipe-sections with the opposite ends of a cock-body, I do not desire to be understood as confining myself to the same, as the coupling may be employed to connect a soft-metal pipe-section to the end of a faucet-body or to the end of any other hard-metal pipe-section or with another soft-metal pipe-section.

In Fig. 3 of the drawings I have shown a construction in which two soft-metal pipe-sections B' are connected with the opposite ends of a hard-metal union or pipe-section A' by my improved couplings. The said union or hard-metal pipe-section A' has ends similar to those of the cock A and carries a faucet A^2, and it is designed to be connected to a wall or other suitable support by a track, as illustrated.

Having thus described my invention, what I claim is—

1. In a pipe-coupling, the combination of the soft-metal pipe to be connected, having the external flange C, formed thereon and provided with the exterior bearing-surface *b*, square to the length of the pipe, and the interior bearing-surface *c*, a button or annulus of soft metal or other substance having the protuberance *i*, conforming in shape to the interior surface *c*, of the collar-flange C, and the peripheral flange with the square surface engaging the surface *b*, of the collar-flange and a connection or connecting-piece consisting of a screw-threaded thimble arranged on the soft-metal pipe and snugly engaging the collar-flange thereof and adapted to engage the complementary portion of a pipe, substantially as specified.

2. In a pipe-coupling, the combination of a threaded hard-metal pipe-section having a square end *g'*, a soft-metal pipe-section having the fixed external collar-flange C, with the exterior bearing-surface *b*, square to the length of the pipe and the interior bearing-surface *c*, the soft-metal button or annulus having the flat side for engaging the square end of the hard-metal section, the protuber-

ance *i*, conforming in shape to the interior surface *c*, of the collar-flange C, and the peripheral flange with the square surface engaging the surface *b*, of the collar-flange and a connection or connecting-piece consisting of the screw-threaded thimble arranged on the soft-metal pipe-section and engaging the collar-flange thereof and also engaging the threaded hard-metal pipe-section, substantially as specified.

In testimony whereof I affix my signature in presence of two witnesses.

NATHANIEL E. SMITH.

Witnesses:
ROBERT P. SMITH,
ARTHUR A. SMITH.