(12) STANDARD PATENT (11) Application No. **AU 2006278463 B2**
(19) AUSTRALIAN PATENT OFFICE

(54) Title
Adaptive cooling method for computer rack enclosure

(51) International Patent Classification(s)
H05K 7/20 (2006.01)

(21) Application No: **2006278463** (22) Date of Filing: **2006.08.04**

(87) WIPO No: **WO07/019304**

(30) Priority Data

(31) Number	(32) Date	(33) Country
60/705,793	**2005.08.05**	**US**

(43) Publication Date: **2007.02.15**
(44) Accepted Journal Date: **2011.03.10**

(71) Applicant(s)
WRD Corporation

(72) Inventor(s)
Boyd, Stephen B.;Johnson, Douglas A.

(74) Agent / Attorney
Davies Collison Cave, 1 Nicholson Street, Melbourne, VIC, 3000

(56) Related Art
US 2004/0112582

(12) INTERNATIONAL APPLICATION PUBLISHED UNDER THE PATENT COOPERATION TREATY (PCT)

(19) World Intellectual Property Organization
International Bureau

(43) International Publication Date
15 February 2007 (15.02.2007)

PCT

(10) International Publication Number
WO 2007/019304 A3

(51) International Patent Classification:
H05K 7/20 (2006.01)

(21) International Application Number:
PCT/US2006/030433

(22) International Filing Date: 4 August 2006 (04.08.2006)

(25) Filing Language: English

(26) Publication Language: English

(30) Priority Data:
60/705,793 5 August 2005 (05.08.2005) US

(71) Applicant *(for all designated States except US)*: **WRD CORPORATION** [US/US]; 50 Parker Street, Unit 3, Newburyport, MA 01950 (US).

(72) Inventors; and

(75) Inventors/Applicants *(for US only)*: **JOHNSON, Douglas, A.** [US/US]; 3 Merrimack River Road, Groveland, MA 01834 (US). **BOYD, Stephen, B.** [US/US]; 20 Hansom Drive, Merrimac, MA 01860 (US).

(74) Agents: **THIBODEAU, David, J.** et al.; HAMILTON, BROOK, SMITH & REYNOLDS, P.C., 530 Virginia Road, P.O. Box 9133, Concord, MA 01742-9133 (US).

(81) Designated States *(unless otherwise indicated, for every kind of national protection available)*: AE, AG, AL, AM, AT, AU, AZ, BA, BB, BG, BR, BW, BY, BZ, CA, CH, CN, CO, CR, CU, CZ, DE, DK, DM, DZ, EC, EE, EG, ES, FI, GB, GD, GE, GH, GM, HN, HR, HU, ID, IL, IN, IS, JP, KE, KG, KM, KN, KP, KR, KZ, LA, LC, LK, LR, LS, LT, LU, LV, LY, MA, MD, MG, MK, MN, MW, MX, MZ, NA, NG, NI, NO, NZ, OM, PG, PH, PL, PT, RO, RS, RU, SC, SD, SE, SG, SK, SL, SM, SY, TJ, TM, TN, TR, TT, TZ, UA, UG, US, UZ, VC, VN, ZA, ZM, ZW.

(84) Designated States *(unless otherwise indicated, for every kind of regional protection available)*: ARIPO (BW, GH, GM, KE, LS, MW, MZ, NA, SD, SL, SZ, TZ, UG, ZM, ZW), Eurasian (AM, AZ, BY, KG, KZ, MD, RU, TJ, TM), European (AT, BE, BG, CH, CY, CZ, DE, DK, EE, ES, FI, FR, GB, GR, HU, IE, IS, IT, LT, LU, LV, MC, NL, PL, PT, RO, SE, SI, SK, TR), OAPI (BF, BJ, CF, CG, CI, CM, GA, GN, GQ, GW, ML, MR, NE, SN, TD, TG).

Published:
— *with international search report*
— *before the expiration of the time limit for amending the claims and to be republished in the event of receipt of amendments*

(88) Date of publication of the international search report:
8 November 2007

For two-letter codes and other abbreviations, refer to the "Guidance Notes on Codes and Abbreviations" appearing at the beginning of each regular issue of the PCT Gazette.

(54) Title: ADAPTIVE COOLING METHOD FOR COMPUTER RACK ENCLOSURE

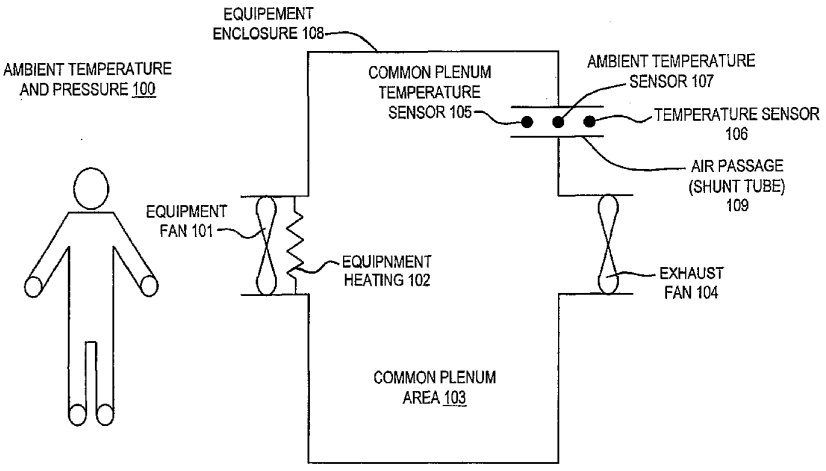

(57) Abstract: A technique for cooling equipment racks that contain multiple individual devices, such as computers, that each have their own internal cooling fans. An air passage ("shunt tube") is placed between a compartment inside the rack, and the ambient air outside the rack, or between compartments inside the rack. Sensors inside the air passage detect movement of the air inside the passage, and thus indirectly measure the presence of a differential pressure. The preferred sensor embodiment uses temperature sensors, and takes advantage of the differences of the air temperatures inside the computer rack, and outside the computer rack (or between internal computer rack compartments) to determine if the air is moving through the air passage, and which direction the air is moving. In response to the measurements, a control system is configured to drive the plenum to a slight vacuum, and then slowly reduce an exhaust fan until the plenum is slightly pressurized, at which point the fan speeds up and again creates a slight vacuum. This allows the rack enclosure to continuously adapt to any changes in cooling requirements, as the computer utilization changes.

WO 2007/019304 A3

ADAPTIVE COOLING METHOD FOR COMPUTER RACK ENCLOSURE

RELATED APPLICATION(S)

This application claims the benefit of U.S. Provisional Application No. 60/705,793, filed on August 5, 2005. The entire teachings of the above application(s) are incorporated herein by reference.

BACKGROUND OF THE INVENTION

It has been estimated that in most of today's data centers, electronic equipment racks generate between 5 to 12 KiloWatts (KW) of heat. The newest computers (servers) being used in data centers are smaller and more powerful, and allow for a very dense placement of machines inside an equipment rack enclosure. Some estimates are that future heat loads inside equipment racks could go beyond 20 KW. The cooling systems used in these equipment racks are clearly important to the reliability of these data centers.

Efficiency is one of the most important aspects of a rack cooling system. The high cost of air conditioning precludes simply making and distributing more cold air than is needed for cooling. The most efficient system will deliver the right amount of cold air to the computer rack--no more, and no less.

Determining the ideal cooling rate for an equipment rack is difficult because the amount of heat generated can vary greatly. For example, computers sitting idle generate far fewer watts than those being heavily used. So if the entire rack is idle, the cooling demand will be significantly lower than if the entire rack is hard at work. Additionally, the number and type of equipment installed in the rack may change over time. A rack that is only half full of servers today may be completely full next week.

Another related challenge is due to the fact that the internal heat being generated is exhausted from the rear of each of the computers by cooling fans that are internal to each computer. Obviously, the combined airflow produced by these cooling fans must be properly managed. If this airflow is mismanaged, hot air exhausting from the rear of the computers could migrate to the front of the cabinet

where it would mix with the cold air supply, and have a detrimental effect on cooling.

Finally, computer manufacturers typically publish "ambient" conditions for which their equipment is designed. The ideal equipment rack cooling system will thus maintain the desired ambient conditions to the internally monitored computers, while using the minimum amount of cooling necessary. In order to do this, the cooling system must not only provide the proper air temperature, it must also insure there are no pressure differentials between the entrance and the exhaust of the internal computers. In other words, the computers must not be allowed to pressurize the rear of the equipment rack, when all their internal fans are running. This could otherwise cause the airflow in Cubic Feet per Minute (CFM) inside the computers to drop, resulting in elevated internal temperatures. Likewise, the computer fans must not be allowed to pull a vacuum in the front of the rack, or again the CFM inside the computers could drop. Alternatively, the cooling system should neither pressurize the front of the rack, nor create a vacuum in the rear of the rack, as either of these conditions would force more cooling air to circulate than is necessary, resulting in reduced efficiency.

SUMMARY OF THE INVENTION

We have come to understand that implementing an ideal equipment rack cooling technique, involves considering that the individual computers/servers themselves monitor their own internal temperatures, and modulate their internal cooling fans based on their own cooling needs. As they heat up, they speed up their internal cooling fans, and as they cool down, the fans slow down. Not surprisingly, the manufacturers of the individual computers have built in the ideal amount of cooling that each one needs based on its current usage.

Therefore, the equipment rack cooling system needs to match the CFM demand of all the individual computers in the rack. This will insure that there are no pressure differentials across the servers, and will let the computers cool themselves correctly as though they were sitting in open ambient room conditions.

One way to implement this is by using pressure transducers to measure the pressure in the front of the rack, and/or in the back of the rack. Thus if the computers speed up their internal fans, and the back of the cabinet is not being exhausted fast

2006278463 21 Feb 2011

enough, a slight increase in pressure will be detected, indicating that the cooling system exhaust fans need to speed up. Then when the rear pressure again equalizes, the exhaust fan CFM has matched the combined CFM demand of computers in the rack.

The problem with using pressure transducers is that the observed pressure differential is typically very small, on the order of 0.1 inches of water (0.0036PSI), or less. Pressure transducers that can accurately measure this low range of pressure are relatively expensive. Additionally, any pressure transducer that is chosen has a minimum pressure sensing capability, below which the transducer will not work. The lower the specified minimum is, the more expensive the transducer is. Then there is an issue of robustness. A very sensitive pressure transducer is going to be less robust, than a not so sensitive one. Building a very robust, very sensitive pressure transducer, is very expensive. The high cost of this approach is a problem for computer rack system designers from several perspectives. It makes using multiple pressure transducers, to obtain better, or redundant information, impractical.

Also, there are competing technologies for equipment rack cooling, such as simply measuring rack exhaust temperature. And while some of these techniques may be inferior, they provide a price point metric, and may work "good enough". These low cost, already available solutions make it difficult to successfully market a high cost approach.

What is needed is a low cost and robust way to measure if the cooling system air flow is matched to the combined CFM of the individual computer's cooling fans. Thus if the computer's internal fans change speed because more or less cooling is needed, the rack cooling system can sense the change and adapt, to provide the same CFM as is demanded by the computers.

According to the present invention there is provided a rack enclosure for enclosing one or more computer systems, the rack enclosure comprising:

at least one internal plenum providing an enclosed space for airflow;

a shunt tube, disposed between an internal plenum and ambient outside the enclosure, or disposed between two internal plenums;

at least one temperature sensor, disposed within the shunt tube, for determining a measured shunt air temperature inside the shunt tube;

a pressure determining circuit, for determining a pressure from a difference in the

2006278463 21 Feb 2011

measured shunt temperature and at least one of a measured or assumed ambient or plenum temperatures; and

a modulating airflow device, for controlling airflow into or out of the enclosure in response to the determined pressure.

The invention also provides a method for controlling an airflow device arranged for supplying or exhausting cooling air for an enclosure, the method comprising the steps of:

disposing an opening between an area inside the enclosure and an area outside the enclosure;

measuring a first temperature at a location in thermal communication with said opening, where the measured first temperature is affected by airflow through said opening, the airflow resulting from a pressure differential across said opening;

determining a direction of airflow through said opening from said temperature measurement, and

controlling the airflow device in response to said direction determining step.

The invention also provides an apparatus comprising:

a rack enclosure, for enclosing a plurality of individual data processing computer systems, with each data processing system having its own corresponding individually controlled air mover, each individually controlled air mover providing exhaust air from its respective data processing system;

a common plenum, disposed to receive exhaust air from at least two of the respective data processing systems;

a rack fan coupled to a supply air to the common plenum;

an opening formed in the rack enclosure through which warm air will exhaust if the rack fan is not providing enough air to match an airflow demand of the plurality of data processing systems, and through which cool air will be drawn in if the rack fan is providing more than enough air to match an airflow demand of the plurality of data processing systems;

a temperature sensor, disposed so as to be affected by airflow through the opening; and

C:\NRPortbl\DCC\DER\3483534_1.DOC-21/02/2011

2006278463 21 Feb 2011

a controller, coupled to the temperature sensor and the rack fan, and controlling the rack fan in response to the temperature sensor.

BRIEF DESCRIPTION OF THE DRAWINGS

The foregoing will be apparent from the following more particular description of example embodiments of the invention, as illustrated in the accompanying drawings in which like reference characters refer to the same parts throughout the different views. The drawings are not necessarily to scale, emphasis instead being placed upon illustrating embodiments of the present invention.

Figure 1 is a high level diagram of the different detection techniques.

Figure 2 is a schematic for a circuit coded to control an enclosure exhaust fan.

Figure 3 illustrates an equipment rack that isolates internal intake and exhaust areas.

Figure 4 illustrates an equipment rack that isolates an exhaust area only.

DETAILED DESCRIPTION OF THE INVENTION

A description of preferred embodiments of the invention follows.

One basic CFM difference detection method according to the invention shown in Figure 1. The technique involves an equipment rack or enclosure (108) that has at least one piece of equipment (such as a computer) with a fan (101) that blows air into a common plenum area (103). The equipment also generates heat (102) so that the air that goes into the common plenum area is heated above ambient temperature. The equipment enclosure also has an exhaust fan (104) that is meant to exhaust the heated air from the common plenum area, at the same CFM as is being introduced into the common plenum area, by the equipment fan (101). Temperature sensors include plenum sensor (105) for measuring the temperature of the air in the common area (103), ambient sensor (107), for measuring the temperature of the ambient room air (100), and sensor (106) for measuring the temperature of the air inside a small air passage ("shunt tube") (109) between the common area (103) and the outside ambient room.

The Sensor (106) is typically placed in the middle of shunt tube (109) inside enclosure (108) and ambient sensor (107) on the other end of tube (109) that is outside enclosure (108) that permits a single shunt tube (109) to carry all three sensors. However, sensors (105, 107) may be individually monitored in other locations in and outside enclosure (108). The CFM difference detection method works because if the exhaust fan (104) is exhausting less air than the equipment fan (101) is introducing, the result is a slight pressure increase in the common plenum area (103), which will then push heated plenum air through the shunt tube (109) to the outside of the enclosure (108). Conversely, if the exhaust fan (104) is exhausting more air than the equipment fan (101) is introducing, the result is a slight pressure decrease in pressure in the common plenum area (103). This will cause cooler ambient air to enter the exhaust shunt tube (109) from outside the equipment enclosure (100). The relatively large difference in temperature between warm plenum air exiting the exhaust shunt tube, or cool ambient air entering the tube, detectable by sensors (105, 106, and/or 107) makes it easy to determine if a CFM

difference exists between the equipment fan and the exhaust fan, and whether the difference is positive or negative (exhausting too little, or exhausting too much).

Figure 1 illustrates a basic configuration for determining a difference in airflow between an equipment fan and an exhaust fan, by measuring a temperature of the air inside and outside a common plenum area and comparing this to the temperature of air moving through a shunt tube. More particularly, the CFM difference detection assembly and method thus uses simple temperature sensors, and an air passage ("shunt tube"). A very low cost and robust CFM detection sensing assembly can thus be produced for use with equipment racks. Another important aspect to this method is that because it is sensing the temperature of the air mass flowing through the shunt tube, a differential pressure of virtually zero can be detected. All that is necessary is the very slightest amount of air movement, just barely moving through the shunt tube, and the large difference in air temperature is easily and quickly detected. This CFM difference detection method provides significant performance improvements, as well as significant price reductions, over differential pressure transducers, when used in computer rack cooling applications.

It should be noted that it is possible to further reduce the cost of the CFM difference detection assembly, by reducing the number of temperature sensors from three, to two, or even one. This can be done by observing that the air inside the common plenum area (103) will always be hotter than the ambient air (100). All that is necessary is to know either the temperature of the common plenum area (103), or the ambient air (100), and then compare this to the temperature sensor inside the shunt tube (109). In a two sensors arrangement for example, with one sensor (106) inside the middle of shunt tube (109), and one sensor (107) in the ambient air (100) end, if the sensors are at the same temperature, the exhaust fan (104) must be exhausting more CFM than the equipment fan (101) is introducing. Conversely, if the exhaust fan (104) is exhausting less air than the equipment fan (101) is introducing, heated air from the common plenum area (103), will be exhausted through the shunt tube (109). Again, the relatively large temperature difference between the air in the common plenum area (103) and the ambient air (100), makes a two sensor implementation of the CFM detection method possible. Additionally, if the ambient temperature is already continuously and precisely controlled at a

known temperature, common in most commercial data centers, all that is necessary is a single temperature sensor (106) placed inside the shunt tube (109). The temperature (106) inside the shunt tube (109) is simply compared to the known (programmed) ambient air temperature (100), to determine which direction the air mass is traveling through the tube (109).

Figure 2 shows an analog circuit that provides for the fundamental operation of a two sensor configuration, when one sensor (106) is in the middle of the shunt tube (109), and the second sensor (107) is in the ambient air (100) end. In this example, the two temperature sensors (200 & 201) are matched (interchangeable) negative coefficient thermistors. Each is connected to a resistor (207 & 208) to ground to form a voltage divider. The resistance values are somewhat arbitrary, but for exemplary purposes the thermistors can be 10K ohms at 25 degrees C, and the resistors to ground are 10K ohms. Resistor to ground (208) is preferably slightly larger in value than resistor (207) so that when both thermistors (200 & 201) are at the exact same temperature, the comparator (202) is guaranteed to be off.

As a result, if both sensors are at 25 degrees C, their resistances are the same (10K ohms), and they divide the 5V source voltage in half, thus generating a 2.5V signal to the "+" input of voltage followers (209 & 210). If one assumes that both voltage followers (209 & 210) are supplying the exact same voltage to the inputs of comparator (202) (the ambient air voltage follower (210) will be slightly higher because of resistor (208)), then the output of the comparator (202) will be off, and the power op-amp (203) will be off. As soon as the thermistor (200) in the shunt tube (109) senses a higher temperature than the ambient temperature thermistor (201), the "+" input of the comparator (202) will receive a higher voltage than the "-" input, and the output of the comparator will turn on (go high = "1"). The comparator's (202) output is then averaged (filtered) with a R/C circuit (205 & 206). This means that the voltage coming off the capacitor (206) charges very slowly, which in turn slowly increases the voltage delivered to the exhaust fan motor (204) by the power op-amp (203). This condition continues as long as the shunt tube thermistor (200) is hotter than the ambient thermistor (201), and the voltage on the exhaust fan motor (204) continues to increase, which causes the fan (204) to run faster. When the exhaust fan motor (204) has finally reached the CFM to equalize

the inside of the computer rack, outside room ambient air will begin to be drawn into the shunt tube (109), causing the two temperature sensors (200 & 201) to read the same temperature, resulting in comparator (202) turning off. The long time constant of the R/C circuit (205 & 206) will result in the exhaust fan motor (204) slowly decreasing in speed. This continues until the exhaust fan motor (204) is no longer exhausting enough CFM, at which point the shunt tube thermistor (200) will again be hotter than the ambient thermistor (201), and the whole process repeats.

The basic CFM detection method described above, can be further integrated into an adaptive cooling system for computer rack enclosure by providing the arrangement shown in Figure 3:

- a rack enclosure (1) containing one or more computing units (8);
- a cold air supply (16) to the rack enclosure (1) for the purposes of cooling the computing units (8);
- an exhaust (2) from the rack enclosure (1) for the purposes of removing the exhaust air from the computing units (8);
- a device for measuring the difference in airflow (CFM) between the incoming cold air supply and the computing units intake fans (shunt tube 11 and e.g., temperature sensor 12);
- a device for measuring the difference in airflow (CFM) between the computing units (8), internal fans (10) and the air exiting the rack enclosure exhaust (sensor 13 & shunt tube 14);
- a mechanism for modulating (15) the airflow (CFM) of the cold air supply into the rack enclosure (1);
- a mechanism for modulating (3) the airflow (CFM) of the exhaust air exiting the rack enclosure (1).

This embodiment of the invention matches the rack enclosure's incoming cold air supply (CFM) to the combined effect of the computing unit's internal intake fans, and matches the rack enclosure exhaust air (CFM) to the combined computing unit(s) exhaust fans, for the purpose of maintaining ambient pressures at the computers internal intakes (7) and at the computers internal exhausts (9). This mimics the conditions of the computers (8) simply being set up inside an air-conditioned room (7), with no rack enclosure (1). By ensuring that there is no

restriction of the cold air getting to the computers air intake (i.e., no low pressure area created by intake air) and by ensuring there is no restriction of the computers exhaust (9) air (i.e., no high pressure area created by exhaust air), the computers (8) internal fans (10) work normally (as they were designed). Additionally, if the cooling is inadequate, and the computers speed up their internal cooling fans (10) to compensate, the rack enclosure (1) will adapt and continue to maintain ambient pressures at the computers intake and exhaust.

The rack enclosure design (1) as shown in Figure 3, preferably isolates the internal computer intake areas (7) from the internal computer exhaust areas (9). The rack's isolated intake area (5) is shared (in communication with) the rack's modulating cold air inlet mechanism (15) as well as the internal computer intake areas (7). Likewise, the rack's isolated exhaust area (6) is shared (in communication with) the rack's modulating exhaust air mechanism (3) as well as the internal computer exhaust areas (9). These two isolated rack areas (intake (5) and exhaust (6)) are isolated from the exterior of the rack (4).

The nature of computer rack cooling systems allows a simplifying refinement where one can stipulate that the air being supplied to the modulating intake mechanism (16) is known to be colder than the external ambient air temperature (4), and the temperature of the air being exhausted (18) by the modulating exhaust mechanism (3) is known to be warmer than the external ambient temperature (4). This allows a simplified method of measuring the differential pressures (referred to as "CFM difference detection" earlier in this text) in the two isolated areas (5 & 6) by measuring the air temperature (via sensors 12&13) inside the two small shunt tubes (11&14), which independently connect each of these isolated areas (5&6) to the exterior of the rack (4).

Thus, for example, if the modulating exhaust mechanism (3) is exhausting too little air, resulting in a slight increase in pressure (compared to ambient) building up in the isolated exhaust area (6), this will push heated exhaust air (18) through the exhaust shunt tube (14) to the outside (4) of the rack (1). Conversely, if the modulating exhaust mechanism (3) is exhausting more air than the computer units (9), resulting in a slight decrease in pressure (compared to ambient) in the isolated exhaust area (6), this will cause ambient air (4) to enter the exhaust shunt tube (14)

from outside (4) the rack (1). The relatively large difference in temperature between warm air (18) exiting the exhaust shunt tube (14), or cool ambient air (4) entering the intake tube (11) provides an inexpensive and robust temperature sensing method for determining if differential pressure (with respect to ambient) exists, and whether the difference is positive or negative.

Likewise, if the modulating inlet mechanism (15) is providing too much cooling air to rack (1), resulting in a slight increase in pressure (compared to ambient) building up in the isolated intake area (5), this will push cold cooling air (17) through the exhaust shunt tube (11) to the outside (4) of the rack (1). Conversely, if the modulating inlet mechanism (15) is not providing enough cooling air to the computer unit(s), resulting in a slight decrease in pressure (compared to ambient) in the isolated intake area (5), this will cause ambient air (4) to enter the intake shunt tube (11) from outside the rack (1). The relatively large difference in temperature between ambient air (4) entering the intake shunt tube (11), or cold cooling air (17) exiting the tube (11), provides an inexpensive and robust temperature sensing method for determining if differential pressure (with respect to ambient) exists, and whether the difference is positive or negative.

Another embodiment of the invention, shown in Figure 4, uses a rack enclosure design (20) that also separates the internal computers intake areas (25) from the internal computers exhaust areas (28), but only isolates the racks exhaust area (29) from the room (23). The racks intake area (33) can be shared (in communication with) the computer room (23) as well as the internal computers intake areas (25). The isolated exhaust area (29) is shared (in communication with) the rack's modulating exhaust air mechanism (22) as well as the internal computers exhaust areas (28), and is isolated from the exterior of the rack (23).

By again stipulating that the temperature of the air being exhausted (30) by the modulating exhaust mechanism (22) is warmer than the external ambient air temperature (23), a simplified method of measuring the differential pressure (referred to as "CFM difference detection" earlier in this text) is possible.

Thus, for example, if the modulating exhaust mechanism (22) is exhausting too little air, resulting in a slight increase in pressure (compared to ambient) building up in the isolated exhaust area (29), this will push heated exhaust air (30) through

the exhaust shunt tube (32) to the outside of the rack (23). Conversely, if the modulating exhaust mechanism (22) is exhausting more air than the computer units exhaust (28), resulting in a slight decrease in pressure (compared to ambient) in the isolated exhaust area (29), this will cause cooler ambient air (23) to enter the exhaust shunt tube (32) from outside the rack (23). The relatively large difference in temperature between warm air(30) exiting the exhaust shunt tube (32), or cool ambient air (23) entering the tube provides an inexpensive and robust temperature sensing (31) method for determining if differential pressure (with respect to ambient) exists, and whether the difference is positive or negative.

In practical implementations, it may be found advantageous to use multiple shunt tubes, in the place of any single shunt tubes, or to modify the shape and size of the shunt tube(s), or provide baffling, or filtering, or other mechanical adaptations. These modifications are not deemed to be important to the basic ideas set forth herein. Also, additional shunt tube placements may also be found to be advantageous, particularly between the two isolated areas (5&6) in the rack enclosure (1). This again, is considered an extension of the basic ideas presented in this description.

Another refinement to shunt tube temperature measurement concept, can be to include temperature sensors at either end, or at both ends of a shunt tube, in addition to placing a sensor in the middle. This could provide measurement benefits over the single sensor shunt tube. In particular, it is then possible to determine if the simplifying stipulations of the ambient air being cooler than the heated exhaust air, but warmer than the cold air supply for the computer rack is true. By measuring both ends of the shunt tubes, assumptions about which air mass is hotter or colder is no longer necessary, as the actual temperatures of the masses are known. It is then be possible to calculate the CFM difference, regardless of the temperatures. Also, it is possible to include a self heating element inside the shunt tube, which could provide even more information to the control system, about the pressures and temperatures in the cabinet. These, again, are viewed as extensions of the basic ideas presented in this description.

While this invention has been particularly shown and described with references to preferred embodiments thereof, it will be understood by those skilled

in the art that various changes in form and details may be made therein without departing from the scope of the invention encompassed by the appended claims.

The reference in this specification to any prior publication (or information derived from it), or to any matter which is known, is not, and should not be taken as an acknowledgment or admission or any form of suggestion that that prior publication (or information derived from it) or known matter forms part of the common general knowledge in the field of endeavour to which this specification relates.

Throughout this specification and the claims which follow, unless the context requires otherwise, the word "comprise", and variations such as "comprises" and "comprising", will be understood to imply the inclusion of a stated integer or step or group of integers or steps but not the exclusion of any other integer or step or group of integers or steps.

2006278463 14 Aug 2008

THE CLAIMS DEFINING THE INVENTION ARE AS FOLLOWS:

1. A rack enclosure for enclosing one or more computer systems, the rack enclosure comprising:

at least one internal plenum providing an enclosed space for airflow;

a shunt tube, disposed between an internal plenum and ambient outside the enclosure, or disposed between two internal plenums;

at least one temperature sensor, disposed within the shunt tube, for determining a measured shunt air temperature inside the shunt tube;

a pressure determining circuit, for determining a pressure from a difference in the measured shunt temperature and at least one of a measured or assumed ambient or plenum temperatures; and

a modulating airflow device, for controlling airflow into or out of the enclosure in response to the determined pressure.

2. An apparatus as in claim 1, wherein the shunt tube is disposed between an internal plenum and ambient outside the enclosure.

3. An apparatus as in claim 2 comprising:

a plenum temperature sensor additionally, disposed in an end of the shunt tube that extends into one of the plenums.

4. An apparatus as in claim 2 additionally comprising:

an ambient temperature sensor disposed in an end of the shunt tube that extends into the ambient outside the enclosure.

5. An apparatus as in claim 1 wherein the shunt tube is disposed between two internal plenums within the enclosure.

6. An apparatus as in claim 5 wherein the two plenums are an intake plenum and an exhaust plenum that respectively isolate intake and exhaust fans internal to the computer

2006278463 14 Aug 2008

systems.

7. An apparatus as in claim 1, wherein a temperature gradient exists in the shunt tube; and a measurement of the temperature of the gradient is used to determine the pressure.

8. A method for controlling an airflow device arranged for supplying or exhausting cooling air for an enclosure, the method comprising the steps of:

disposing an opening between an area inside the enclosure and an area outside the enclosure;

measuring a first temperature at a location in thermal communication with said opening, where the measured first temperature is affected by airflow through said opening, the airflow resulting from a pressure differential across said opening;

determining a direction of airflow through said opening from said temperature measurement, and

controlling the airflow device in response to said direction determining step.

9. A method as in claim 8, wherein the step of determining a direction of airflow further comprises:

measuring a second temperature at a second location adjacent the opening; and

determining the direction of airflow by comparing the first and second temperatures measured.

10. A method as in claim 8 wherein a shunt tube is disposed in the opening, and the first temperature is measured at a location inside the shunt tube.

11. A method as in claim 9 wherein the second temperature is measured at a location outside the enclosure.

12. A method as in claim 11 wherein a third temperature is measured at a location inside the enclosure, and wherein the direction of airflow is determined from the first, second and third temperatures measured.

2006278463 14 Aug 2008

13. A method as in claim 10 wherein the second temperature is measured at one end of the shunt tube.

14. A method as in claim 10 wherein the enclosure further comprises an intake plenum and exhaust plenum, and the shunt tube is disposed between the intake and exhaust plenums.

15. A method as in claim 10 wherein a second temperature is measured at a location outside the enclosure and a third temperature is measured at a location inside the enclosure, and wherein the direction of airflow is determined by comparing an average of the second and third temperatures with the first temperature.

16. An apparatus comprising:

a rack enclosure, for enclosing a plurality of individual data processing computer systems, with each data processing system having its own corresponding individually controlled air mover, each individually controlled air mover providing exhaust air from its respective data processing system;

a common plenum, disposed to receive exhaust air from at least two of the respective data processing systems;

a rack fan coupled to a supply air to the common plenum;

an opening formed in the rack enclosure through which warm air will exhaust if the rack fan is not providing enough air to match an airflow demand of the plurality of data processing systems, and through which cool air will be drawn in if the rack fan is providing more than enough air to match an airflow demand of the plurality of data processing systems;

a temperature sensor, disposed so as to be affected by airflow through the opening; and

a controller, coupled to the temperature sensor and the rack fan, and controlling the rack fan in response to the temperature sensor.

2006278463 21 Feb 2011

17. A rack enclosure for enclosing one or more computer systems substantially as hereinbefore described with reference to the accompanying drawings.

18. A method for controlling an airflow device arranged for supplying or exhausting cooling air for an enclosure substantially as hereinbefore described with reference to the accompanying drawings.

19. An apparatus for controlling cooling air to an enclosure substantially as hereinbefore described with reference to the accompanying drawings.

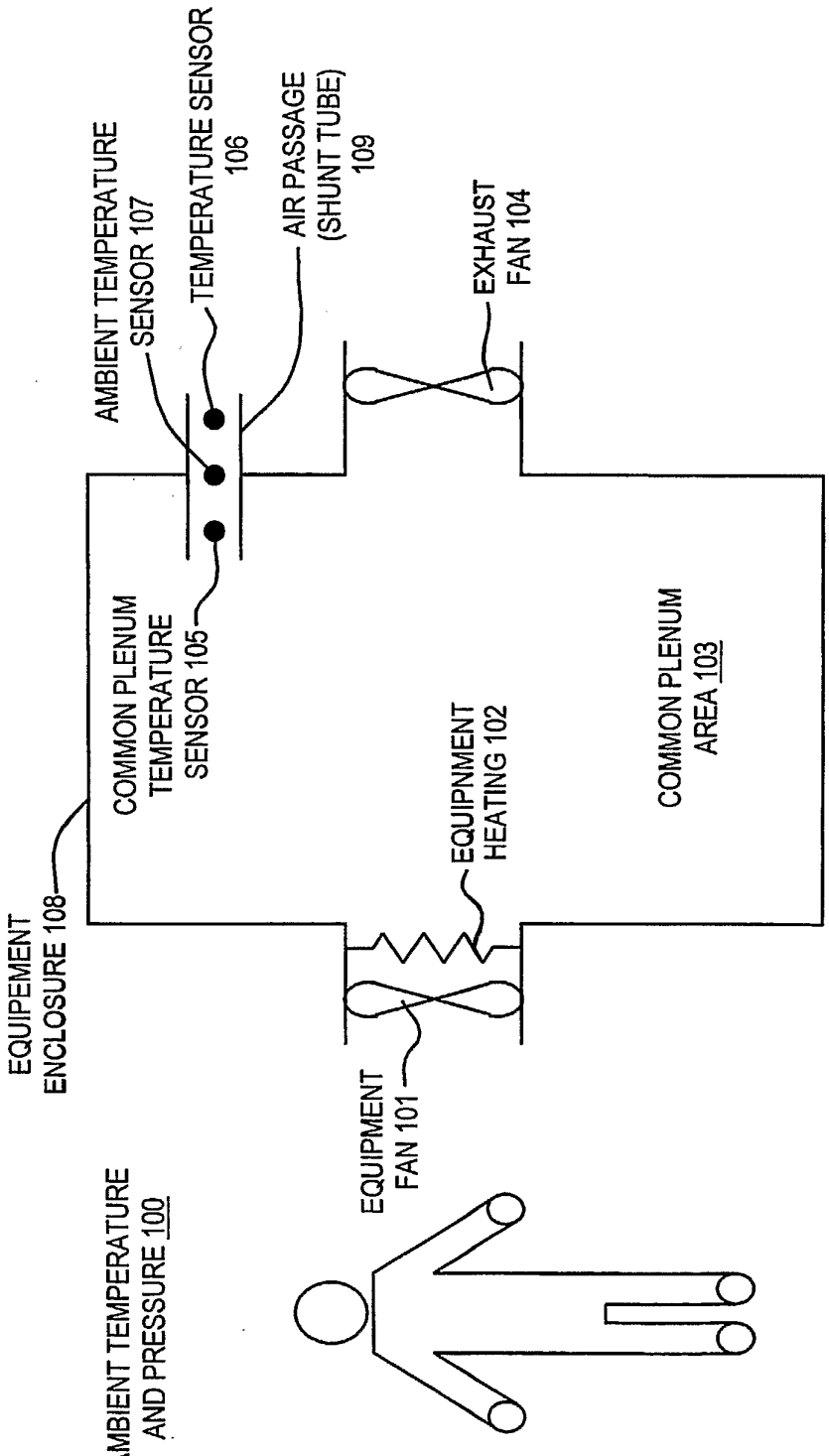
AMBIENT TEMPERATURE AND PRESSURE 100
EQUIPEMENT ENCLOSURE 108
COMMON PLENUM TEMPERATURE SENSOR 105
AMBIENT TEMPERATURE SENSOR 107
TEMPERATURE SENSOR 106
AIR PASSAGE (SHUNT TUBE) 109
EXHAUST FAN 104
EQUIPMENT FAN 101
EQUIPNMENT HEATING 102
COMMON PLENUM AREA 103

FIG. 1

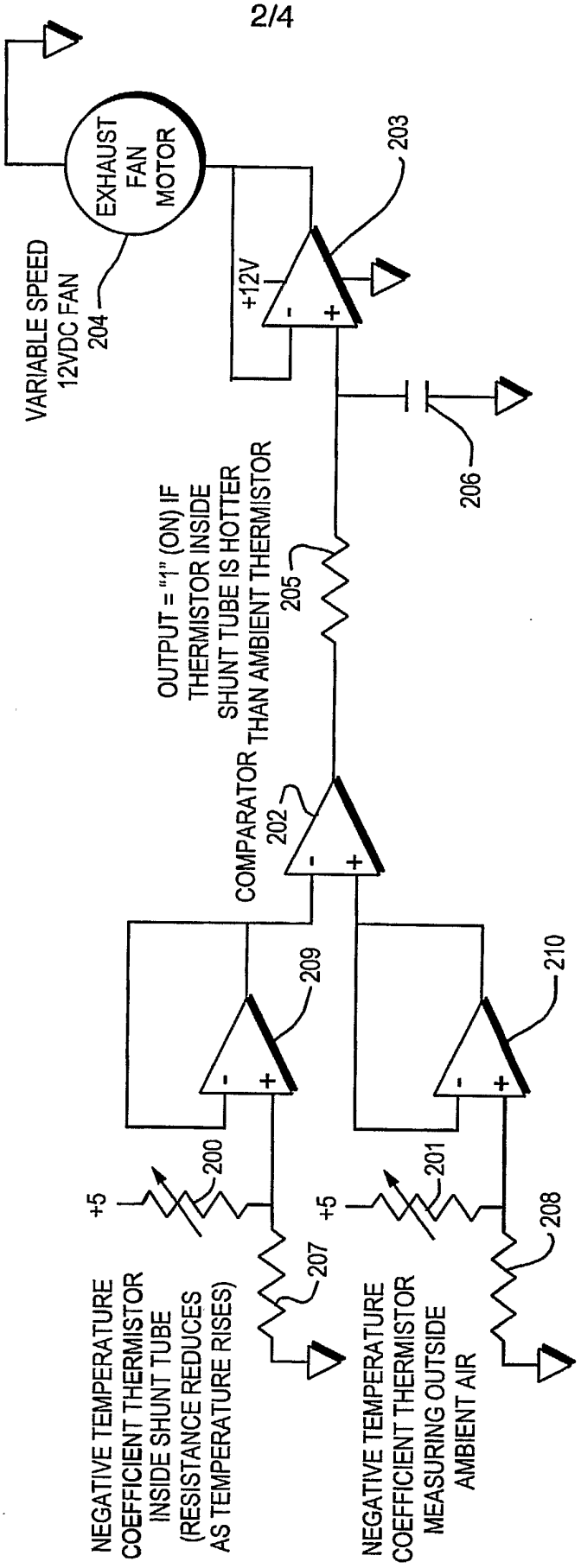
EXHAUST FAN MOTOR
VARIABLE SPEED 12VDC FAN
204
+12V
203
206
OUTPUT = "1" (ON) IF THERMISTOR INSIDE SHUNT TUBE IS HOTTER THAN AMBIENT THERMISTOR
205
COMPARATOR
202
209
210
+5
200
201
207
208
NEGATIVE TEMPERATURE COEFFICIENT THERMISTOR INSIDE SHUNT TUBE (RESISTANCE REDUCES AS TEMPERATURE RISES)
NEGATIVE TEMPERATURE COEFFICIENT THERMISTOR MEASURING OUTSIDE AMBIENT AIR

FIG. 2

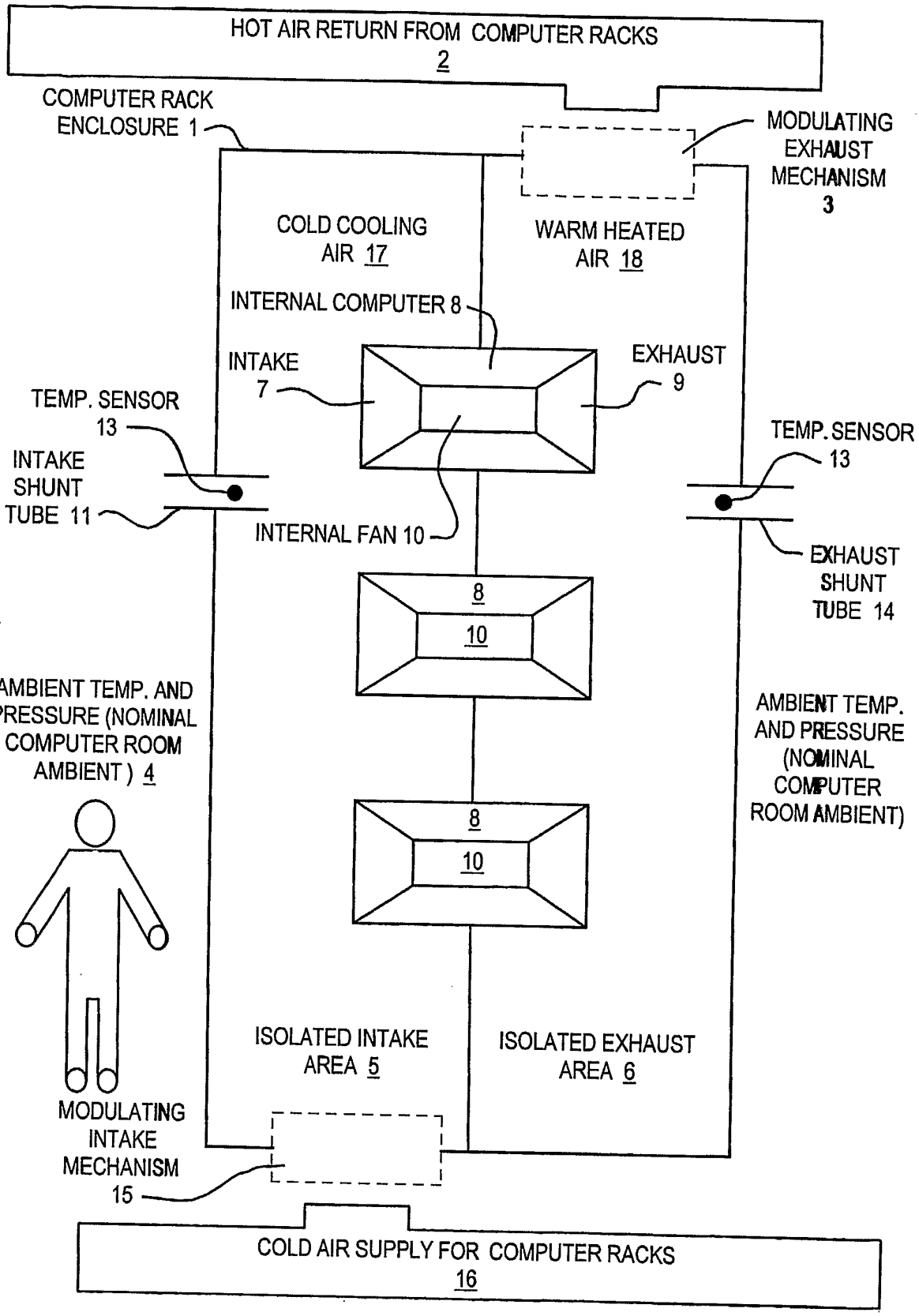

FIG. 3

SUBSTITUTE SHEET (RULE 26)

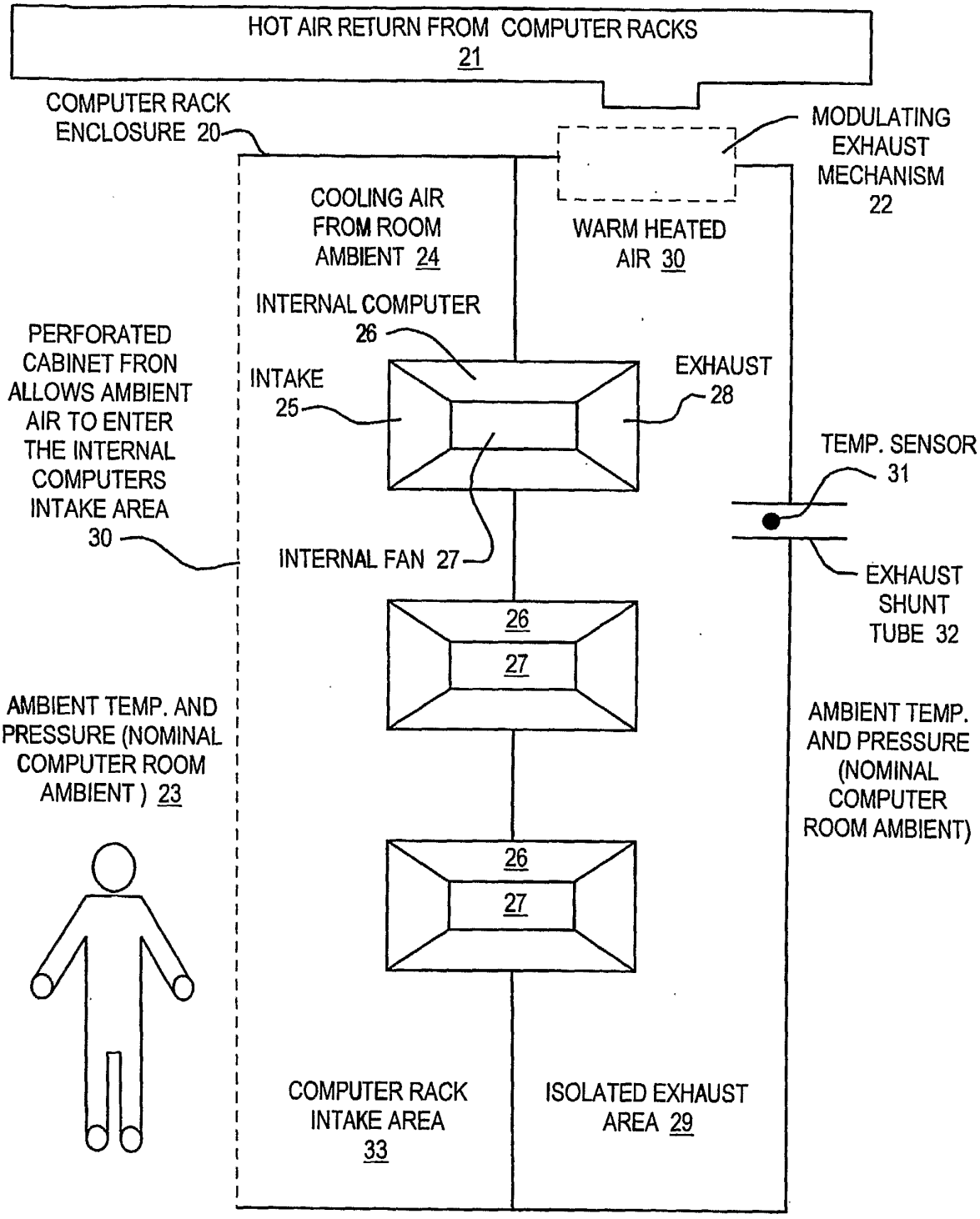

FIG. 4

SUBSTITUTE SHEET (RULE 26)