Sept. 16, 1958 J. J. WIELENGA 2,852,768

CATHODE RAY TUBE SUPPORTING DEVICE

Filed March 1, 1955

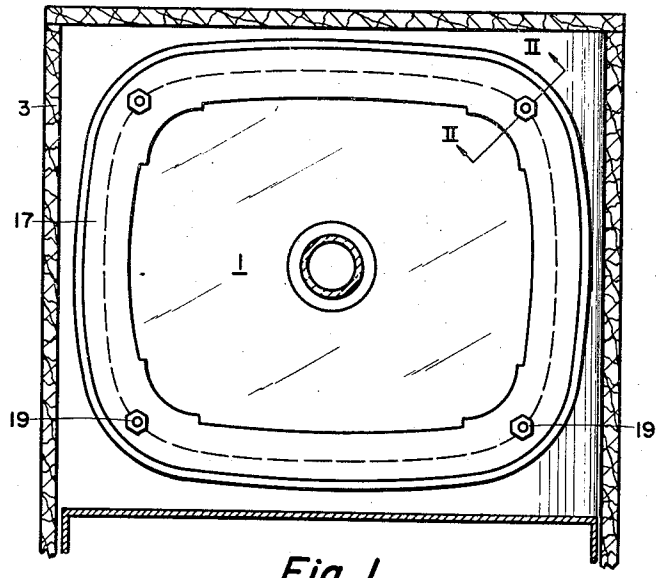


Fig. 1

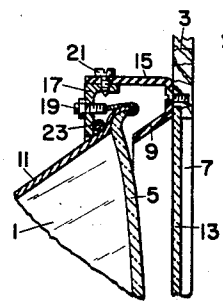


Fig. 2

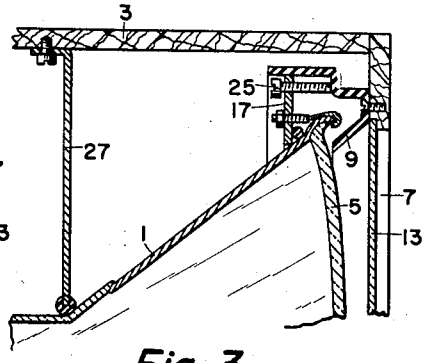


Fig. 3

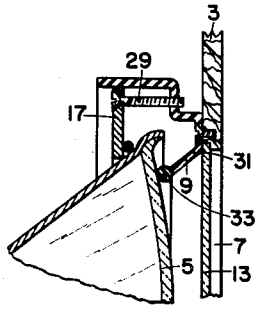


Fig. 4

INVENTOR.
JENNO JOHANNES WIELENGA
BY
Fred M. Vogel
Agent

United States Patent Office 2,852,768
Patented Sept. 16, 1958



2,852,768

# CATHODE RAY TUBE SUPPORTING DEVICE

Jenno Johannes Wielenga, Emmasingel, Eindhoven, Netherlands, assignor, by mesne assignments, to North American Philips Company, Inc., New York, N. Y., a corporation of Delaware

Application March 1, 1955, Serial No. 491,385

Claims priority, application Netherlands March 6, 1954

5 Claims. (Cl. 340—367)

The invention relates to a television apparatus comprising a cathode-ray tube, more particularly a tube having a metal cone and a rectangular image screen.

When mounting large cathode-ray tubes, having for example a (maximum) image screen diameter of 21", in the cabinet of a television receiver, difficulties are experienced, since such large tubes can, as a rule, not be manufactured with small tolerances with respect to the dimensions of the screen; this applies, more particularly to tubes having a metal cone and a rectangular screen.

Since the said tolerances may be 5 to 10 mms. it is, for example, not possible without special measures to fix the position of the screen in the cabinet of the apparatus by means of a positioning member, for example an upright holding edge or rim surrounding narrowly the screen, since if the tube is to be replaced by a new one, the edge thereof might be found not to fit into the holding edge.

According to the invention this difficulty is obviated by providing on the conical part of the tube, near the edge of the image screen, a rigid frame which surrounds the tube and which, in turn, is surrounded by a supporting member secured to the cabinet of the apparatus and supporting the frame. The supporting member is preferably constituted by an upright edge or rim of insulating material, embracing narrowly the frame and secured to the front wall of the apparatus.

In order that the invention may be readily carried into effect, it will now be described more fully with reference to the accompanying drawing, in which:

Fig. 1 is a rear view of an embodiment of a portion of a television receiver which is essential for the invention;

Fig. 2 is a sectional view taken on the line II—II of Fig. 1;

Fig. 3 is a modification of the embodiment of Fig. 2, in section; and

Fig. 4 is another modification of the embodiment of Fig. 2, in section.

Fig. 1 shows a television receiver comprising a cathode-ray tube **1** having a rectangular image screen, the tube being accommodated in a cabinet **3**, for example of wood. From Fig. 2, which shows a portion of the device shown in Fig. 1 near one of the rounded angles of the image screen **5** of the tube **1** in an axial view, it is evident that the image screen **5** is arranged behind a viewing hole **7** in the front of the cabinet **3**. The image screen **5** is framed by a so-called mask **9** of insulating material, the sectional area of which is channel-shaped and which is secured to the front wall **3**. The mask **9** hides the edge of the metal cone **11** of the tube **1**, said edge surrounding the image screen **5**, and at the same time insulates the said edge from the cabinet **3**. Between the mask **9** and the wall **3**, in a groove along the edge of the viewing hole **7**, provision may be made of a glass guard **13**.

As stated before, the dimensions and the shape of the image screen **5** are subjected to comparatively large tolerances and it is not possible to construct the mask **9** in a manner such that, for example, its upright outer



edge **15** fits intimately around the edge of the image screen **5**. In order to ensure that the screen **5** is always in its correct position relative to the viewing hole **7**, the conical part of the tube **1** is surrounded, in the proximity of the edge of the image screen **5**, preferably at a distance therefrom of not more than ¼ of the axial length of the conical part of the tube **1**, by a rigid frame **17** of metal or insulating material. The frame **17** bears preferably (see Fig. 1) on the metal cone **11** of the tube only near the rounded angles of the image screen, i. e. at the parts of the greatest mechanical rigidity. In the case concerned, the frame **17** is embraced by and secured to the upright edge **15** of the mask **9**, the inner side of said edge constituting a cylindrical surface, the axis of which is at right angles to the front wall **3**. By means of fastening bolts **19**, provided with a hook and engaging the edge of the image screen, the frame **17** is secured to the cone **11** and the structure is secured so as to be displaceable to the edge **15** by means of fastening bolts **21**. The bolts **21** are introduced through two large holes in the edge **15** and are screwed into one or more edge parts of the frame **17** bent at right angles.

Since the frame **17** may be manufactured with comparatively accurate dimensions, the fastening described above ensures that the cathode-ray tube, the tolerances of the size of the image screen, always occupies its correct position in the cabinet, even when the tube is exchanged. It is a further advantage that the tube is primarily supported by a member engaging the comparatively rigid metal cone **11**, while the vulnerable seal of the glass screen to the metal cone is exposed only to a low mechanical load.

The mask **9**, the frame **17** and the glass guard **13** constitute a dust-tight envelope for the screen **5**. In order to render the connection of the frame **17** to the cone **11** also dust-tight, the cone is preferably surrounded between said frame and the screen **5** by a closed, elastic rope or tube **23**, for example of rubber, which engages the said frame and said cone under tensile force and which provides a dust-tight closure between the said frame and the said cone.

In the modification shown in Fig. 3, the frame **17** is adjustable relative to the mask **9** by means of set screws **25**, and the tube **1** with the frame **17** is urged between the set screws **25** screwed into the frame, for example, by a slightly resilient strap **27**, secured to the cabinet **1**, in an axial direction against the mask **9**.

Fig. 4 shows another modification, in which the frame **17** is secured by means of screw bolts **29**, engaging the front wall of the cabinet, in this case, the mask **9**. The image screen **5** of the tube bears on the inner edge **31** of the mask **9**, which edge may be provided with an elastic fillet **33**, providing a dust-tight closure.

While the invention has been described by means of specific examples and in specific embodiments, I do not wish to be limited thereto, for obvious modifications will occur to those skilled in the art without departing from the spirit and scope of the invention.

What is claimed is:

1. A supporting device for mounting a cathode-ray tube having a metal cone and a substantially rectangular image screen in a cabinet, comprising a rigid frame secured to said metal cone, a mask of insulating material secured to said cabinet, means fixing said frame to said mask, and means co-acting with said frame and mask for adjusting the position of said tube and said frame in the direction of the longitudinal axis of the tube.

2. A supporting device as set forth in claim 1, further comprising fastening means for securing said rigid frame to an edge of said image screen.

3. A supporting device as set forth in claim 2, further

comprising fastening means which secures the rigid frame to the front wall of said cabinet.

4. A supporting device as set forth in claim 1 further comprising elastic material positioned between the frame and the tube, said elastic material engaging said frame under a tensile force to thereby provide a substantially dust-tight closure formed by the inner contiguous surfaces of the frame, mask and tube.



5. A supporting device for mounting a cathode-ray tube as set forth in claim 1, wherein said rigid frame engages said tube only at the area of the rounded corners of the image screen.

**References Cited** in the file of this patent

UNITED STATES PATENTS

2,684,477 Fisch ---------- July 20, 1954