Sept. 26, 1939. D. RUBIN 2,174,217

PISTON EXPANDING APPARATUS

Filed Dec. 1, 1937 3 Sheets-Sheet 1

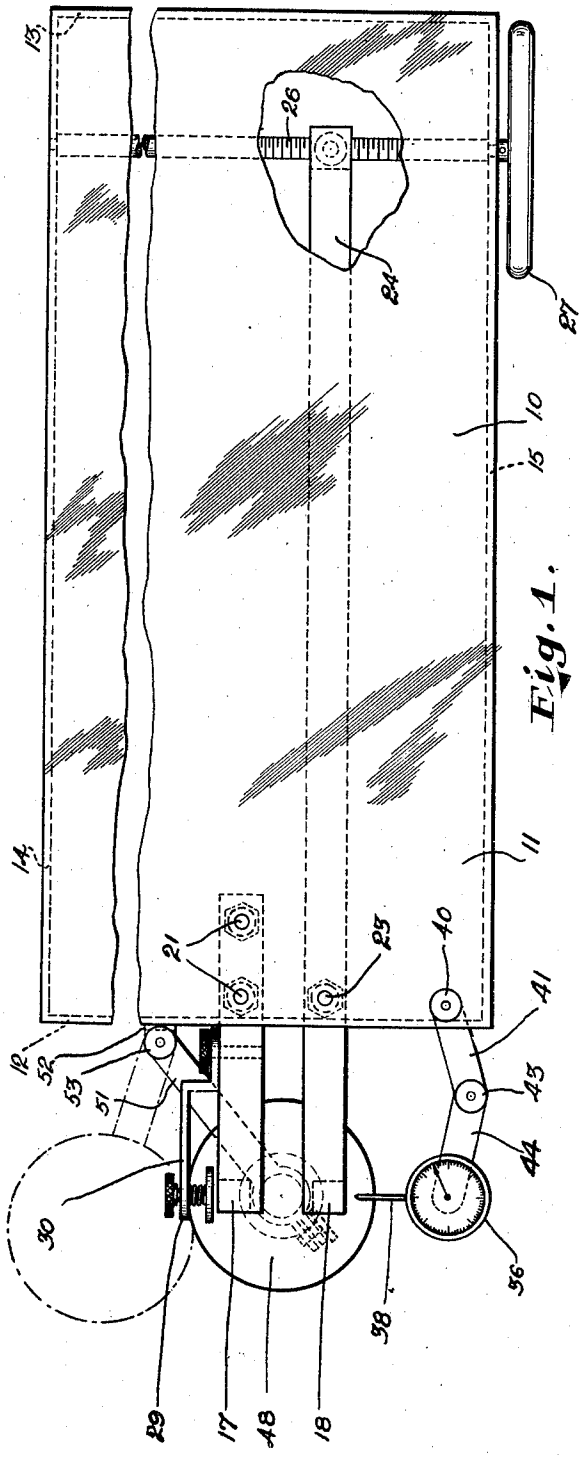

Fig. 1.

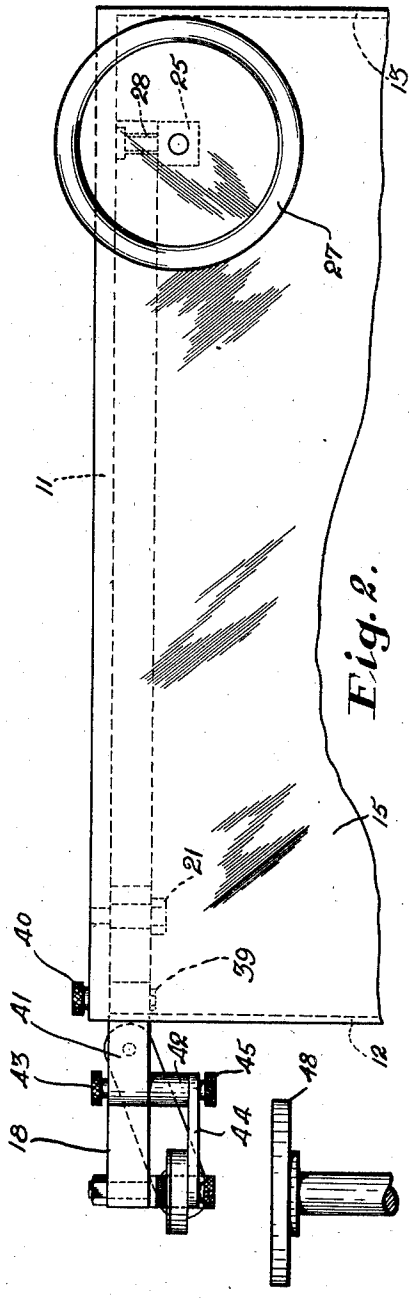

Fig. 2.

Inventor,
David Rubin.
By Baldwin & Wight
his Attorneys.

Sept. 26, 1939. D. RUBIN 2,174,217

PISTON EXPANDING APPARATUS

Filed Dec. 1, 1937 3 Sheets-Sheet 2

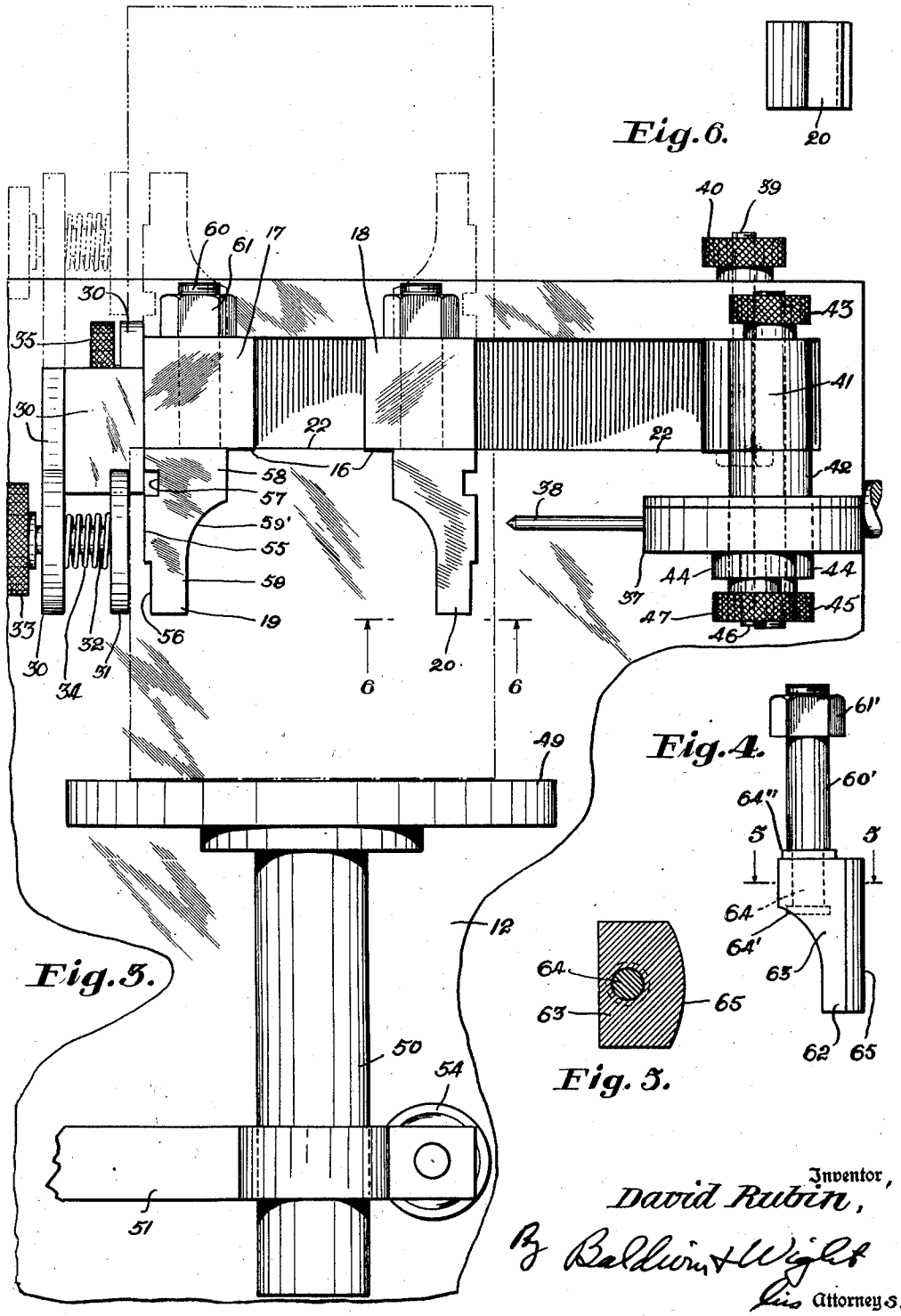

Fig. 3.

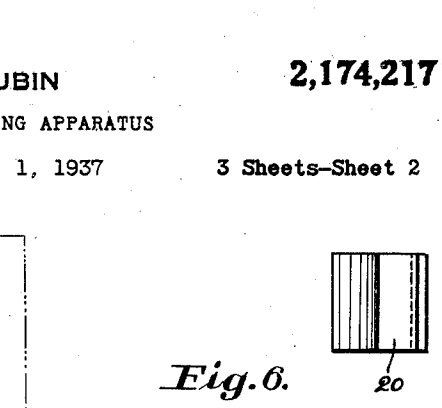

Fig. 6.

Fig. 5.

Fig. 4.

Inventor,
David Rubin,
By Baldwin & Wight
His Attorneys.

Sept. 26, 1939. D. RUBIN 2,174,217

PISTON EXPANDING APPARATUS

Filed Dec. 1, 1937 3 Sheets-Sheet 3

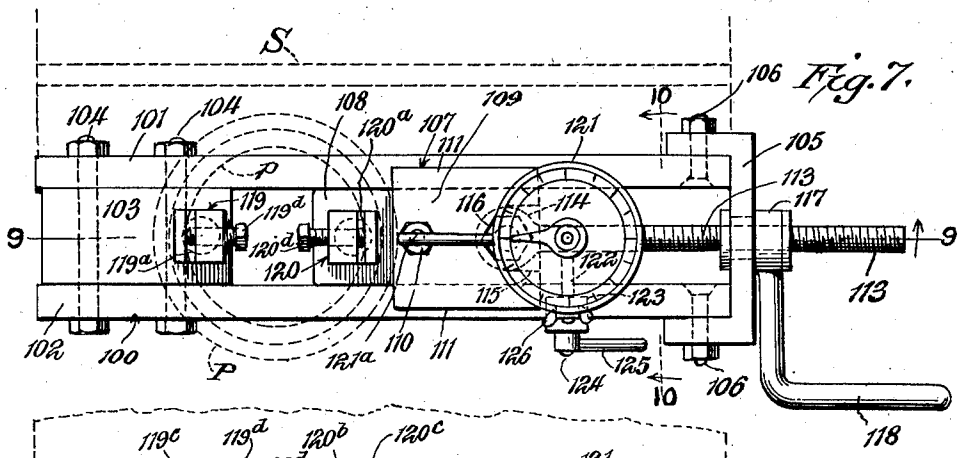

Fig. 7.

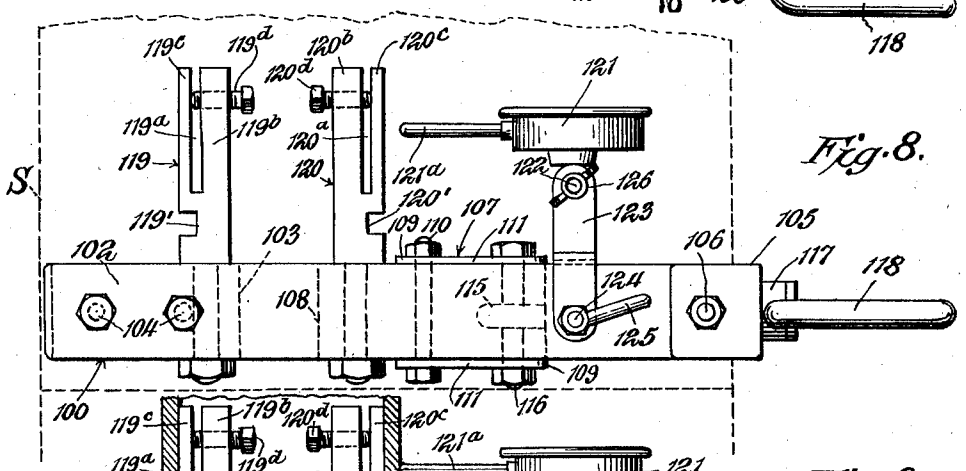

Fig. 8.

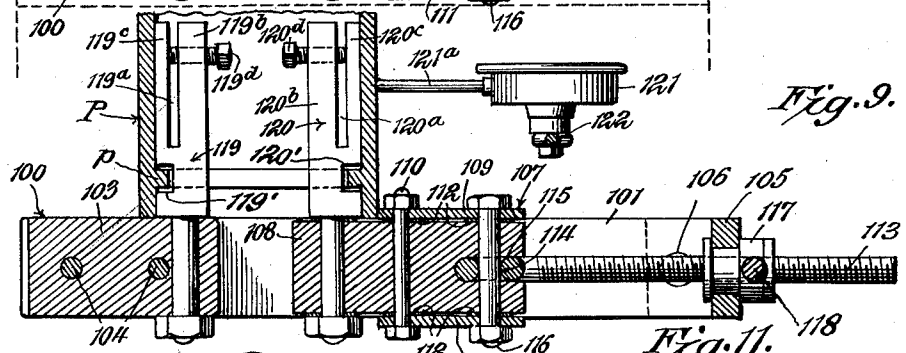

Fig. 9.

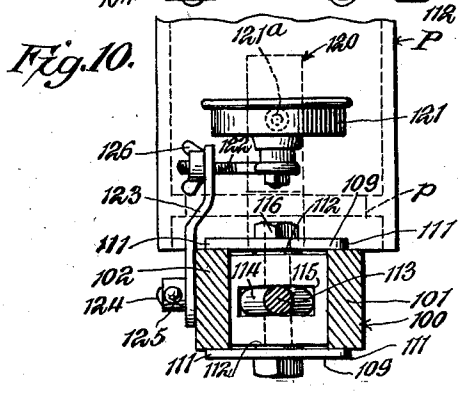

Fig. 10.

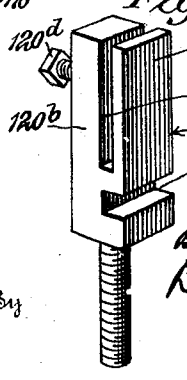

Fig. 11.

Inventor,
David Rubin,
By Baldwin & Wight
his Attorneys.

Patented Sept. 26, 1939

2,174,217

UNITED STATES PATENT OFFICE

2,174,217

PISTON EXPANDING APPARATUS

David Rubin, Scranton, Pa., assignor to Scranton Industrial Development Company, Scranton, Pa., a corporation of Delaware

Application December 1, 1937, Serial No. 177,569

7 Claims. (Cl. 153—80)

This invention relates generally to devices for decreasing the clearance of pistons in the cylinders of internal combustion motors and more particularly to machines for expanding the pistons of such motors.

This application is a continuation-in-part of my copending application Serial Number 118,964, filed January 4, 1937.

Internal combustion engines after a certain amount of use, lose compression and power owing to the fact that the piston rings, cylinder wall and piston skirt become worn down. The cylinder may be rebored and new rings and piston installed, but it is cheaper to replace the worn rings with new ones and use the old piston. The old piston because of its relatively reduced diameter, oscillates about the piston pin and between the cylinder walls giving rise to what is known as "piston slap". It is well known to insert a resilient expansive device within the piston skirt to enlarge the same, but this is unsatisfactory for many reasons, including the facts that insufficient enlargement is obtained and the characteristics of the piston are altered.

Inasmuch as the new piston rings provide increased compression, I have found that if the piston skirt is expanded transversely of the piston pin, "piston slap" is removed and oil consumption is considerably reduced. I have also found that if instead of being expanded, the piston skirt is ovalized (a reduction of the skirt diameter, longitudinally of the piston pin and a corresponding increase in piston skirt diameter transversely of the pin) an improved motor performance is obtained. Where the piston skirt is slotted a combination of expanding and ovalizing is very satisfactory.

While it has been proposed to expand piston skirts by hammering or "peening" them to an expanded shape, this has been unsatisfactory in that insufficient expansion is produced and the peening causes the metal to crystalize and become brittle.

The present invention contemplates the physical expansion of the piston skirt while same is in a heated and annealed condition. After the stretching operation is completed, the piston is retempered so that its original metallic condition is restored but the new shape is retained. The metal heating and treatment varies with the metallic composition of the piston.

In my co-pending application, Serial Number 167,473, filed October 5, 1937, now Patent Number 2,133,403, I have disclosed and claimed a method of expanding pistons, such method involving certain steps of heating, stretching, and cooling. The invention disclosed and claimed in the present application relates more especially to apparatus for expanding pistons, e. g., in accordance with the method disclosed in my co-pending application, Serial Number 167,473, now Patent Number 2,133,403. It will be understood, however, that apparatus embodying my present invention is not restricted in use to the practice of the particular method referred to.

The main object of the present invention is the provision of structure whereby a simple, efficient and inexpensive device accurately expands pistons of various types.

Another object is the provision of a device of the class described which may be conveniently adjusted to handle pistons of various types.

Another object is the provision of a device of the class described which contains structure for supporting and retaining the piston in proper position while the same is being stretched or expanded.

Another object is the provision of a measuring device in conjunction with the expanding machine for accurately determining the expanded piston size.

A further object of the invention is the provision of improved replaceable piston expanding abutments capable of accommodating the internal structure of various types of pistons.

A still further object is to provide means for adjusting the alignment of the piston-engaging abutments. Other objects will become apparent from a reading of the following description, the appended claims, and the accompanying drawings, in which:

Figure 1 is a fragmentary plan view of one preferred embodiment of the invention;

Figure 2 is a fragmentary elevational view of Figure 1;

Figure 3 is an enlarged fragmentary elevational view of the front of the machine shown in Figure 1;

Figure 4 is an elevational front view of an alternate type of piston expanding peg;

Figure 5 is a sectional view of Figure 4 as seen from the plane 5—5 thereon;

Figure 6 is a bottom view of the moving piston peg shown on Figure 3 as seen from the plane 3—3 thereon;

Figure 7 is a top plan view of a further preferred embodiment of the invention;

Figure 8 is a view in side elevation of the embodiment shown in Figure 7;

Figure 9 is a longitudinal vertical sectional view taken on the line 9—9 of Figure 7;

Figure 10 is a vertical cross sectional view taken on the line 10—10 of Figure 7; and

Figure 11 is a detail perspective view of a piston-engaging abutment.

Form shown in Figures 1 to 6 inclusive

Referring first to the embodiment shown in Figures 1 to 6 inclusive, there is shown a casing or frame 10 supporting the operating parts and having a top 11 which serves conveniently as a stationary work table. The front and back walls 12 and 13 respectively and the side walls 14 and 15 may be sufficiently extended downwardly to enclose the heating and tempering ovens (not shown) for treating the pistons before and after stretching.

The stretching or expanding assembly, generally indicated by numeral 16, is composed essentially of a stationary arm 17 and a moving arm or carrier 18 upon which are detachably mounted a stationary piston expansion abutment or peg 19 and a movable piston expansion abutment or peg 20, respectively. Stationary arm 17 is of rigid construction and is securely mounted, by means of two bolts 21, to the bottom surface of top 11 and projects horizontally forward through the left end of a horizontally disposed oblong orifice 22 in front wall 12. Moving arm 18 is the load arm of a long lever or carrier 24 mounted similarly to arm 17, but is pivotally connected to top 11 by means of bolt 23 which threadedly engages the underside of said top similarly to bolts 21. The rear end of lever 24 has a nut 25 pivotally attached thereto, and the nut in turn is threadedly mounted on a transversely mounted screw 26. Screw 26 is trunnioned in side walls 14 and 15 and penetrates the latter to have a large hand wheel 27 affixed to the terminal thereof. Sufficient clearance 28 is provided, longitudinally with respect to lever 24, to allow for the arcuate travel of the rear end of said lever, so that the manual actuation of hand wheel 27 will result in the arm 18 and peg 20 slowly and powerfully approaching or receding from arm 17 and peg 19, depending upon the direction of rotation of the hand wheel.

It is, of course, apparent that other means of actuation of arm 18 may be employed, such as hydraulic, or compound lever means, but the means described above have been found efficient and inexpensive.

The abutments or pegs 19 and 20 may be identical in construction and interchangeable; hence a description of peg 19 will suffice for both. The working face 55 is plane, vertical, and transversely disposed with relation to the principal direction of motion of peg 20. Face 55 is provided with a horizontal rabbet 56 at the lower edge thereof, and a horizontal groove 57. The purpose of these depressions is to permit horizontally disposed reinforcing ribs on the internal surfaces of the piston skirt to fit therein so that the expanding pressure may be exerted against the relatively smooth portions of the cylindrical inner walls of the piston skirt. The placement of these depressions may be varied to suit the individual requirements of different types of pistons but the configuration shown in Figure 3 has been found satisfactory for nearly all ordinary pistons. The inner face 58 is provided with a deep rabbet 59, preferably curved at 59' so that the strain is evenly distributed and the likelihood of breakage is reduced. An integral shank 60 threaded adjacent the end thereof, penetrates a vertically disposed orifice in arm 17 and a nut 61 when tightened down securely clamps the peg 19 in place. Peg 20 is similarly attached to the arm 18.

In Figures 4 and 5 there is illustrated an alternate type of peg. This peg 62 has a working head 63 which is adapted to swivel about the pivot 64 and the working face 65 has a cylindrically shaped surface. The peg 62 is substituted in place of peg 20 when the piston skirt is of a type having vertically disposed reinforcing ribs, or when the piston skirt is provided with a diagonally disposed slot. The face 65 is adapted to fit between the said vertical ribs or to distribute pressure over a sufficiently large area around the diagonal slot so that the skirt is not fractured. The curvature of face 65 may be altered to coincide with the configuration of different pistons, where advisable. Peg 62 is provided with a shank 60' which is inserted in the opening in the forward end of arm 18 and is secured with the nut 61'. Pivot head 64' prevents the head 63 from slipping off while shoulder 64'' provides a smooth bearing surface in place of the upper face of arm 18, so that the head 63 may readily rotate.

A clamping device 29 is used to hold the piston to the stationary peg 19 before and after the piston is acted on by peg 20 so that the piston will not become displaced and in order that accurate measurements may be made before, during, and after the stretching or expanding operation. This device 29 comprises a support arm 30, and a clamping face plate 31. Since the piston is comparatively light and the pegs 19 and 20 maintain it in place while the piston is being expanded, the clamping device need not exert very great pressure. The face plate 31 is supported by an integral rod 32 perpendicularly projecting from the rear thereof to penetrate the forward end of support arm 30, and terminate in the operating knob 33. A spiral expansive spring 34 serves to force the face plate 31 against the piston skirt and clamp it against peg 19. The support arm 30 is adjustably clamped at the rear end thereof to arm 17 by means of the thumbscrew 35. The forward portion of arm 30 is offset so that a sufficient clearance is provided for the insertion of the piston skirt and the operation of the face plate 31.

A measuring device 36 is provided for readily and accurately determining the amount of expansion given the piston skirt. Such a device comprises preferably a rim-set dial micrometer 37 whose feeler 38 is adapted to contact the outer surface of the piston skirt on a line with the centers of pegs 19 and 20. The micrometer 37 is adjustably mounted by virtue of the following assembly. Bolt 39 which freely penetrates top 11, and pivotally carries the rear end of arm 41 may be tightened in position by thumb-nut 40. Arm 41 penetrates orifice 22. A spacer 42 has two integral screw ends of reduced diameter, the upper one of which penetrates an orifice in the forward end of arm 41 and is adjustably clamped by a thumb nut 43; and the lower one which penetrates an orifice in the rear end of arm 44 and is adjustably clamped by a thumb-nut 45. The forward end of arm 44 is adjustably and pivotally connected to the micrometer by the integral threaded shank 46 depending from said micrometer which penetrates said arm and is clamped by thumb-nut 47. Wherever desirable, the spacer 42 may be made adjustable, or other

suitable mechanism may be utilized for varying the effective height of the micrometer.

An adjustable work table **48** is vertically regulable for supporting pistons of different heights and is pivotally mounted in a horizontal plane so that it may be swung into and out of position as needed. The horizontal face **49** is supported by an integral vertical post **50** which is in turn clamped in the bifurcated end of an arm **51**, the rear end of which is pivotally mounted on an inverted L shaped bracket **52** affixed to the front wall **12**. Actuation of thumb-screw **53** allows adjustment in a horizontal plane and actuation of thumb-nut **54** allows adjustment in a vertical plane.

Operation of the form shown in Figures 1 to 6 inclusive

Knob **33** is pulled out and the heated piston is placed up under pegs **19** and **20**, with the piston pin parallel to the arm **17**, and the skirt outside of the pegs, whereupon knob **33** is released. The table **48** is swung underneath the piston head and adjusted to support the piston in the position indicated by the dash-single-dot lines on Figure 3. The measuring device is adjusted so that the feeler **38** contacts the outer wall of the piston skirt and is properly aligned as set forth above. The micrometer is adjusted to zero reading. Hand wheel **27** is manipulated and the desired expansion or stretch is given to the piston skirt as the peg **20** moves away from peg **19**. This procedure is then reversed and the piston is removed.

It may now be noted that the connecting rod and piston assembly may be treated without removing the connecting rod from the piston. The connecting rod is placed between the arms **17** and **18** while the piston pin and connecting rod knuckle find no obstruction because of the rabbets **59**.

The machine is shown set up on Figures 1, 2, and 3 for operating on pistons with the piston head down. In this arrangement it is easy for the operator to see into the piston and carefully adjust same with relation to the pegs. Where it is desired, however, the pegs **19** and **20** may be inverted and the clamping device swung up to take the position indicated by the dash-double-dot lines on Figure 3. The measuring device may also be raised by reversing the positions of arm **44** and spacer **42**. In this position the piston is treated with the head up, and is placed as indicated by the dash-triple-dot lines on Figure 3.

Form shown in Figures 7 to 11 inclusive

Figures 7 to 11 inclusive show a further preferred embodiment of the invention which is somewhat similar in general structural arrangement and mode of operation to the form shown in Figures 1 to 6 inclusive, but which also includes other advantageous features.

In the embodiment shown in Figures 7 to 11, which may be carried upon a support S, there is provided a frame generally designated **100** which conveniently may be fabricated of side track or guide members **101—102** spaced apart at their left hand ends, as viewed in Figures 7, 8, and 9, by means of a block **103** to which the side members are secured by bolts **104**. At their right hand ends the guide members **101—102** are connected together in spaced relation by means of a cross piece **105** and bolts **106**.

A carrier or cross head generally designated **107** is mounted for sliding movements on the guide members **101—102**. In the form shown, the cross head comprises a block **108** and upper and lower plates **109** secured to the block by means of bolts **110**. The plates **109** extend laterally beyond the sides of the block to provide flanges **111** adapted to ride on the upper and lower surfaces of the guide members **101—102**. Preferably, the block **108** is of a thickness, measured vertically, somewhat less than the height of the guide members, the plates **109** being spaced slightly from the top and bottom faces of the block by means of replaceable shims **112**. This arrangement provides for adjusting the position of the block **108** with respect to the guide members so as to properly position or align the block relative to the guide members.

Any suitable power or manually operated means may be provided for moving the carrier or cross head along the guide members. In the form shown, there is provided a screw **113** having an eye **114** positioned in a recess **115** in the cross head block **108**, and a bolt **116** secured to the cross head and passing through the eye. The outer end of the screw extends through the internally threaded sleeve **117** journalled in the cross piece **105** of the frame and being provided with a crank **118**.

In accordance with the invention, piston-engaging abutments—in the present instance comprising pegs **119—120**—are carried by the blocks **103** and **108**, being respectively secured thereto by studs as in the first form of the invention. The arrangement is such that a piston P shown fragmentarily in Figure 9 is positioned over the pegs **119** and **120** with the lower surface of the piston skirt resting upon the frame and block **108**. The pegs **119** and **120** are arranged to contact respectively with opposite surface portions of the inside of the piston skirt, so that, upon relative separating movement of the pegs, effected by rotation of the screw and movement to the right of the cross head, the pegs will press outwardly against the skirt at diametrically opposite sides thereof so as to stretch or expand the skirt. Preferably, the pegs extend well into the piston and have contact with the inner surface of the skirt over a substantial area considered longitudinally of the piston axis. Many present-day pistons are provided with internal stiffening projections, such as beads or ribs, and the piston P is disclosed as having such a rib designated *p*. In order to provide for the extended contact area between the pegs and skirt of a piston provided with such a projection, the pegs are formed with recesses or depressions **119'** and **120'** respectively adapted to accommodate the projection *p*, at the same time permitting the remainder of the operative face of each peg to lie snugly against the inner surface of the piston skirt.

In accordance with a further feature of the invention, the pegs themselves are so constructed as to provide for adjustment of the piston-engaging surfaces thereof in a manner to permit a very accurate alignment of the pegs with respect to the piston surface, and with respect to each other. A preferred construction making such adjustment possible comprises pegs **119** and **120** formed with splits at **119a** and **120a** respectively, thus providing fork-like or bifurcated members. Thus the peg **119**, by virtue of the split, is formed with a relatively heavy part **119b** and a relatively light part **119c**. A screw **119d** having threaded engagement with the heavy part **119b** engages the lighter part **119c**, so that operation of the screw springs the lighter part relative to the heavier part, thus effecting a change in the alignment of the lighter or piston-engaging part with respect to the piston

skirt and with respect to the piston-engaging part of the peg 120. Similarly, the peg 120 is formed with a relatively heavy part 119b and a relatively light part 119c, being provided also with an adjusting screw 119d.

It will be observed that, by changing the thickness of the shims 112 which are interposed between the cross head block 108 and cross head plates 109, a primary adjustment of the cross head, and consequently of the peg 120, may be effected. After such primary or relatively coarse adjustment has been made, a final and finer adjustment of the alignment of the piston-engaging surfaces of the pegs may be made by operation of either one or both of the screws 119d and 120d. These adjustments are particularly convenient and important when the apparatus is used for expanding pistons of various designs. I have found that the inner surfaces of the skirts of different types and makes of pistons taper axially of the pistons to varying degrees. The adjustments provided in accordance with the present invention make it possible to expand various kinds of pistons without providing special abutments for each particular design of piston.

The embodiment shown in Figures 7 to 11 inclusive, as well as that disclosed in Figures 1 to 6, may advantageously be provided with an indicator gauge or the like for measuring or indicating the amount of stretching or expansion of the piston being worked upon. As shown, a dial gauge 121 having a feeler 121a is mounted upon a screw 122 having threaded engagement with a bracket 123 secured to the frame by means of a screw 124. A lock nut 125 on the screw 124 serves to clamp the bracket 123 in adjusted position, and a lock nut 126 on the screw 122 serves to clamp the screw and hence the gauge in adjusted position with respect to the bracket. The gauge thus is so mounted as to be adjustable relative to the frame. In use, the gauge is adjusted or moved to such position that the feeler 121a engages the outer surface of a piston skirt prior to expanding thereof. Then the screw 113 is rotated to move the cross head to the right so as to effect relative separating movement of the abutments and stretching of the piston until the gauge indicates that the predetermined desired amount of stretching has taken place.

Operation of the form shown in Figures 7 to 11 inclusive

To recapitulate the mode of use and operation of the embodiment shown in Figures 7 to 11, it will be assumed that the parts are in the position shown in Figures 7 and 8. The first step is to operate the screw 113 so as to move the cross head and abutment peg 120 toward the left until the distance between the outer faces of the pegs 119 and 120 is considerably less than the inside diameter of the piston skirt. The piston is then placed over the pegs, and, if it is found that the outer faces of the peg portions 119c and 120c do not align with the associated inner piston skirt portions, the necessary adjustments of one or both of the pegs are effected in the manner already described. The gauge is then set so that the feeler 121a engages the outer surface of the piston, and the screw is rotated in the opposite direction until the gauge shows that the proper amount of stretching has taken place. Thereafter the screw is again rotated to move the cross head to the left so that the piston may be removed from the apparatus.

The apparatus shown herein embody the invention in preferred and commercially successful forms, but it is to be understood that changes may be made without departing from the invention as defined in the claims.

I claim:

1. In a piston skirt expanding apparatus, the combination of a frame; a first abutment in fixed relation to said frame and having a surface adapted to engage a first portion of the inside surface of a piston skirt; a carrier; a second abutment mounted on said carrier; means mounting said carrier on said frame with the carrier-mounted abutment substantially parallel to the piston-engaging surface of said first abutment; the portions of said frame and carrier adjacent the bases of the abutments being spaced apart, said frame and carrier outwardly of the abutments having surfaces in a common plane for contact by an internally-engaged article; and means for moving said carrier to effect relative separating movement of said abutments, the last mentioned means also functioning to retain the carrier in its different positions.

2. In a piston skirt expanding apparatus, a combination as set forth in claim 1 and in which the carrier comprises an arm pivoted to the frame.

3. In a piston skirt expanding apparatus, a combination as defined in claim 1 and in which the frame includes a guide and the carrier comprises a cross head slidable on the guide, and in overlapping engagement with opposite sides thereof.

4. In a piston skirt expanding apparatus having abutments mounted on a frame and adapted to engage spaced portions of the inside surface of a piston skirt, at least one of said abutments comprising a split member having a heavy portion and a relatively light portion, the latter portion being outermost and being directly engageable with a piston skirt, and means having bearing cooperation with said heavy portions for effecting relative movements between said heavy and light portions to deflect said light portion out of parallelism with said heavy portion.

5. In a piston skirt expanding apparatus, an abutment comprising a split fork-like member and means for effecting relative movements between the portions thereof on opposite sides of the split.

6. In a piston skirt expanding apparatus, an abutment comprising a split fork-like member having a relatively heavy portion on one side of the split therein and a relatively light portion on the other side of the split, and an adjusting screw having threaded engagement with said relatively heavy portion and bearing upon the relatively light portion.

7. In apparatus for expanding a piston skirt having a projection on the inner surface thereof such as an annular stiffening rib or bead, the combination of a frame to support the piston, a pair of abutments rising from the frame in spaced relation to each other having oppositely disposed faces adapted respectively to engage the inner surface of the piston skirt on opposite sides thereof, said faces being elongated axially of the piston to engage the skirt over an area extending over a substantial part of the axial length thereof, at least one of said abutments being formed with a depression to accommodate said projection; and means for effecting relative separating movement of the abutments while the piston is supported on the frame to effect engagement with and disengagement from said depression.

DAVID RUBIN.