United States Patent

[11] 3,527,214

[72] Inventors **Michel Rio**
Champigny, France;
Marcel Chevalier, Paris, France

[21] Appl. No. **730,269**
[22] Filed **May 20, 1968**
[45] Patented **Sept. 8, 1970**
[73] Assignee **l'Air Liquide, Societe Anonyme pour l'Etude et l'Exploitation des Procedes Georges Claude**
[32] Priority **May 24, 1967**
[33] **France**
[31] **107,671**

[54] **APPARATUS FOR REGENERATING A BREATHABLE GAS IN INDIVIDUAL RESPIRATORY DEVICE OF THE CLOSED-CIRCUIT TYPE**
6 Claims, 2 Drawing Figs.

[52] **U.S. Cl.** **128/191,** 128/202
[51] **Int. Cl.** **A61m 15/00,** A62b 21/00
[50] **Field of Search** 128/191, 142, 142.2, 142.3, 142.5, 142.6; 62/514, 514A; 98/1; 128/202, 203

[56] **References Cited**
UNITED STATES PATENTS

795,679	7/1905	Bamberger et al.	128/191
819,704	5/1906	Bamberger et al.	128/191
1,222,683	4/1917	Schumann	128/191
1,353,857	9/1920	Schumann	128/191
1,472,117	10/1923	Drager	128/191
1,983,475	12/1934	Lemoine	128/191
3,161,192	12/1964	McCormack	62/514

Primary Examiner—William E. Kamm
Assistant Examiner—John B. Mitchell
Attorney—Young and Thompson

ABSTRACT: Apparatus for regenerating a breathable gas in individual respiratory apparatus of the closed-circuit type, wherein the exhaled gases pass through a regenerating element and then, before re-inhalation, through a cooling element, all the active substances being kept ready for use in closed or sealed containers which will be made operative just at the moment of use, in such a way to instantaneously provide the wearer with cooled breathable gases.

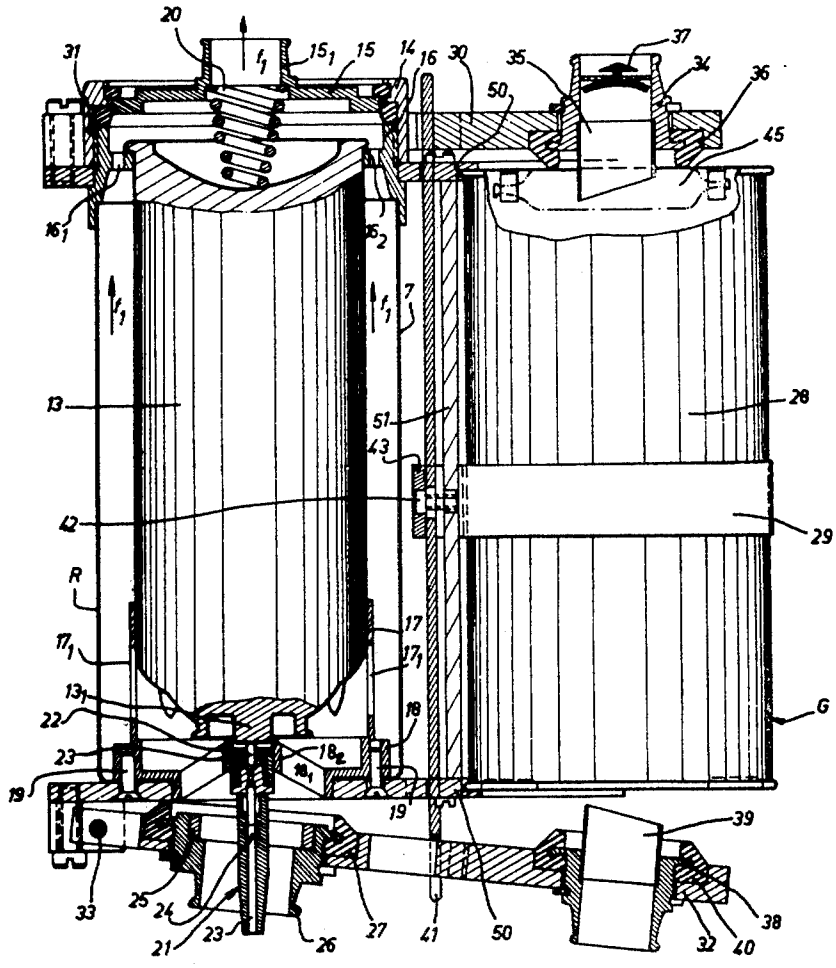

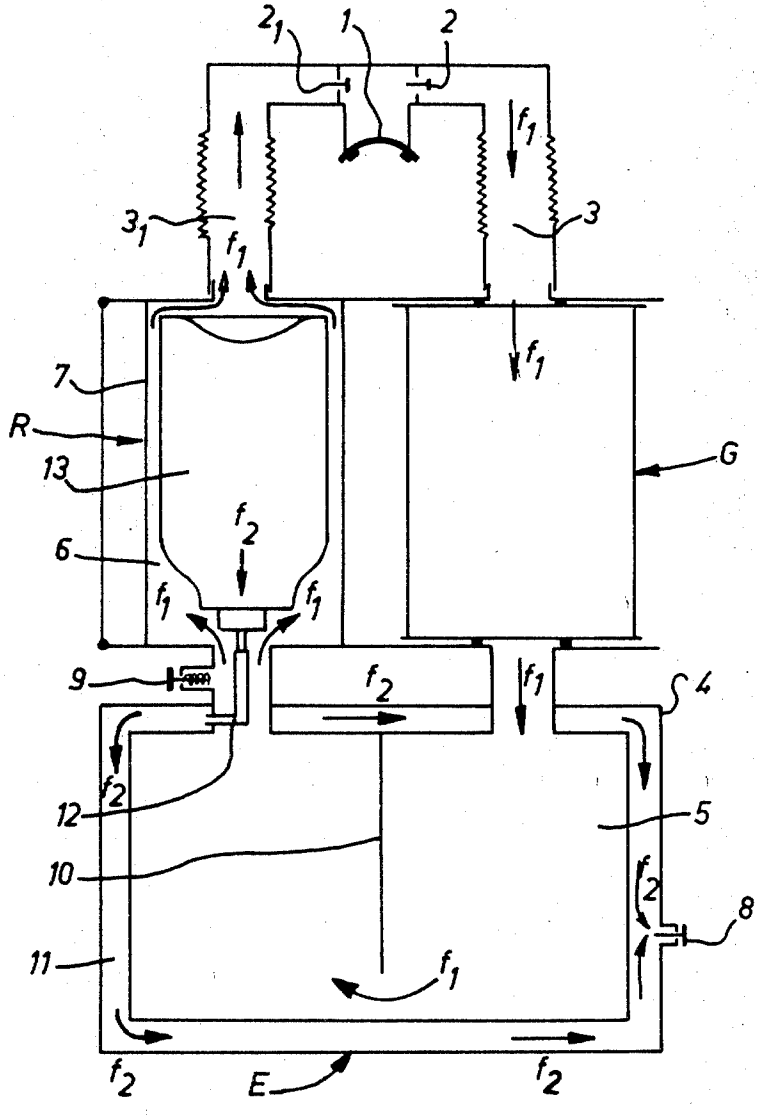

FIG. 1

INVENTOR
MICHEL RIO
MARCEL CHEVALIER
By Young & Thompson
ATTYS.

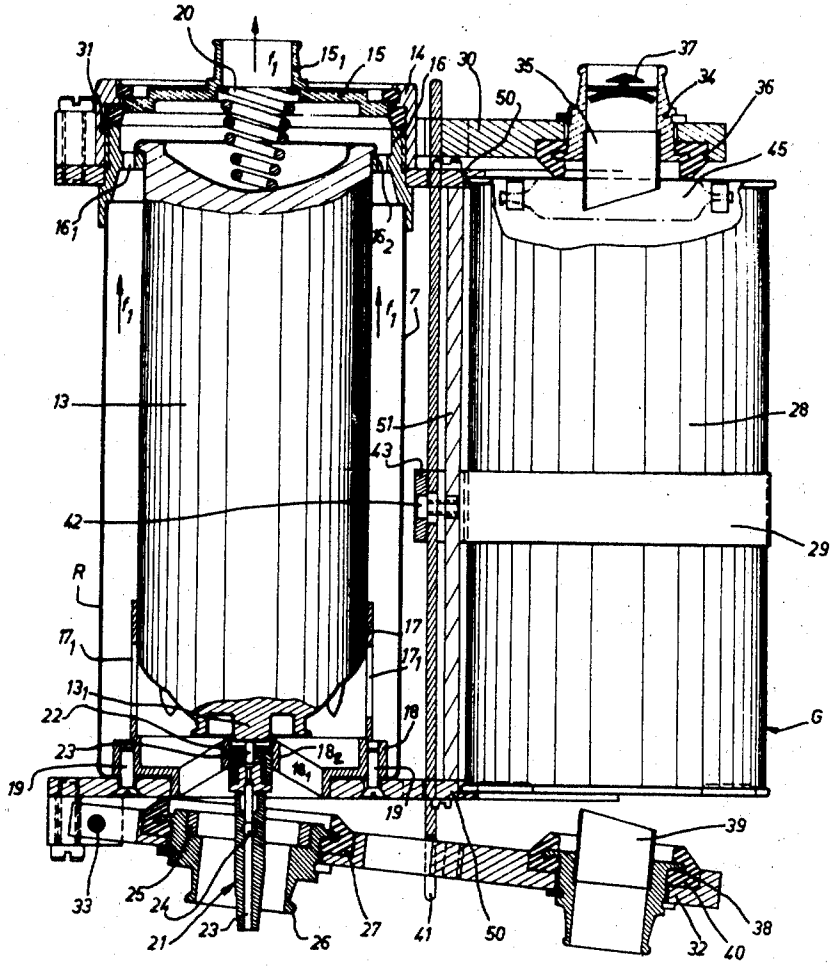

FIG. 2

INVENTORS
MICHEL RIO
MARCEL CHEVALIER
By Young & Thompson
ATTYS.

APPARATUS FOR REGENERATING A BREATHABLE GAS IN INDIVIDUAL RESPIRATORY DEVICE OF THE CLOSED-CIRCUIT TYPE

The present invention relates to apparatus for regenerating a breathable gas in individual respiratory apparatus of the closed-circuit type, wherein the exhaled gases pass through a regenerating element comprising an alkaline-earth peroxide or alkaline peroxide and then, before re-inhalation, through an element for effecting cooling by indirect heat exchange with a relatively cold fluid.

Cooling before re-inhalation of the regenerated exhaled gases is necessary owing to the exothermic nature of the chemical reactions involved in the generation of oxygen and the fixing of carbon dioxide between the exhaled gases and the peroxides. Consequently, the breathing of the person wearing the apparatus rapidly becomes uncomfortable, and even impossible after a fairly short period of time.

Such cooling devices for regenerated exhaled gases are known more particularly from Belgian Pat. No. 392,890 which describes an oxylith type regenerator for apparatus for protecting wearers against all asphyxiating gases, comprising a device for cooling regenerated exhaled gases before re-inspiration. However, this type of device requires a relatively long time to bring into action, a very serious disadvantage at the time of use, which should be instantaneous if possible. Furthermore, cooling should be effected from actuation onwards, since the heating resulting from the exothermic reaction of the regeneration soon makes itself felt. In order to overcome these disadvantages, the invention proposes keeping all the active substances ready for use in closed or sealed containers which will not be opened, perforated or broken until the moment of use.

For this purpose, the regenerating element is an entirely sealing-tight container the ends of which can easily be perforated, and the cooling element comprises a cooling fluid container provided with an opening member, these two elements being supported by a frame on which are pivotably connected a first lever supporting a perforating tube for perforating an end of the regenerating element, and a second lever supporting on the one hand a second perforating tube for the other end of the regenerating element and, on the other hand, a union for feeding the regenerated gases, within which is fixed a member comprising the opening device for the cooling fluid container and a tube for discharging the said fluid to the heat exchanger, the said member being arranged substantially concentrically with the said union, the two levers being held spaced in the position of rest from the upper and lower ends of the said elements by a locking means.

We note that in this way the following are obtained: substantially unlimited conservation of the regenerating reagent and the cooling fluid and instantaneous bringing into action of a device which is simple and robust and always ready for use.

Advantageously, means for urging the aforesaid levers are provided for applying in a sealing-tight manner, at unlocking, the perforating tubes against the upper and lower ends of the regenerating element, piercing them and applying against the frame the feed union supporting the opening member of the cooling fluid container, so as to open the said container.

It also seems useful to provide a catalyst accommodated in the container containing the regenerating reagent in order to obtain the immediate production of a certain volume of oxygen and the decomposition reaction of the peroxide at a relatively low temperature. This catalyst will preferably be contained in a glass ampoule which will be broken by the perforating tube of the first lever.

For this purpose, a glass ampoule containing an aqueous solution of a salt having a low freezing point and a catalyst for decomposition of the peroxide is arranged below the upper end of the regenerating element, opposite the perforating tube.

Finally, the recommended cooling fluid is a pure chlorofluorinated hydrocarbon or a mixture of chlorofluorinated hydrocarbons.

FIG. 1 shows diagrammatically a respiratory apparatus comprising the device according to the invention.

FIG. 2 shows in a more detailed manner one example of the device.

The apparatus shown in FIG. 1 comprises a mouthpiece **1** from which a bellows tube **3** serves to feed the exhaled gases through a non-return valve **2** towards the regenerating element G containing the single reagent for the production of oxygen and the fixing of the exhaled carbon dioxide. The element G communicates with the internal element **5** for example a breathing bag, of a heat exchanger E. This element G communicates with the internal element **5** for example a breathing bag, of a heat exchanger E. This element is provided with at least one baffle **10**, for example, or any other means for lengthening the path of travel of the exhaled gases. It is arranged in a casing **4** at such a distance that a space **11** is created between the external wall of the element **5** and the casing **4**, in which a cooling fluid can flow freely. The element **5** communicates with the space **6** between an element **13** which is the source of the cooling fluid, and the external wall **7** of the cooling element R. The regenerated gases then travel through the bellows tube 3_1 and the non-return valve 2_1 to the mouthpiece **1**. An excess pressure valve **9** is provided to permit the discharge towards the exterior of any surplus of regenerated gas.

The element **13**, the source of the cooling fluid, communicates by way of the conduit **12** with the space **11** between the element **5** and the external wall **4** of the heat exchanger E, a valve **8** being provided in the wall **4** to prevent the admission of the internal air in the exchanger E when the breathing bag contracts.

According to the method according to the invention, the exhaled gases pass through the non-return valve **2** and the tube **3** into the regenerating element G. The latter preferably contains an alkaline-earth peroxide or alkaline peroxide which reacts with the humidity contained in the gases exhaled so as to produce oxygen and form the corresponding hydroxide. The latter and the peroxide fix the carbon dioxide to form the corresponding carbonate and to release a supplementary quantity of oxygen. The element G can also accommodate a catalyst which is arranged in a separate container containing an aqueous solution of a salt having a low freezing point, in which it is dissolved, for example.

When the apparatus is brought into operation, the aqueous solution containing the catalyst is brought into contact with the peroxide. This permits an immediate production of a certain volume of oxygen and the use of the peroxide decomposition reaction at a relatively low temperature.

However, these chemical reactions have an exothermic character and the regenerated gases consequently are subjected to a considerable increase in temperature.

According to the invention, these hot gases are cooled by heat exchange with a cooling fluid before arriving at the mouthpiece **1** for inhalation.

The cooling is effected first of all in a heat exchanger E. Such a heat exchanger E can, for example, comprise an internal element **5** communicating with the element G. This element **5** may be constituted by an exchanger element such as the breathing bag. Means for lengthening the path of travel of the regenerated gas can be provided in this case, such as baffles **10**.

However, any other means for lengthening the path of travel of the regenerated gases and, more generally, any other heat exchanger, may be used without thereby departing from the scope of the invention.

The breathing bag **5** provided with at least one baffle **10** is arranged in a flexible casing **4**. In the space **11** between the casing **4** and the bag **5** there flows a cooling fluid coming from a source **13** arranged in a cooling element R.

The cooling fluid is preferably non-combustible and is even a fire extinguisher. Its pressure is compatible with the mechanical strength of the pressure source element **13**, taking into account the temperatures at which the apparatus is used, and the fluid has a high heat of vaporization.

This fluid is preferably a mixture of fluorodichloro methane and difluoro-dichloro methane in equal parts (by weight)

which permits very effective cooling of the gases during the entire duration of independent operation of a conventional closed-circuit respiratory apparatus.

By way of example, the following are other fluids which may also be used:

Tetrafluoro-dichloro ethane	$C_2Cl_2F_4$	
Fluoro-dichloro methane	$CHCl_2F$	
Fluoro-trichloro methane	CCl_3F	
Tetrafluoro-dichloro ethane	$C_2Cl_2F_4$	In mixture, 50% each by weight.
Fluoro-dichloro methane	$CHCl_2F$	

The cooling fluid is released from its source **13** at the instant when the apparatus is brought into action by any suitable means **21** (FIG. 2), one form of embodiment being described hereinafter by way of example. The cooling fluid follows a path in the direction of the arrows f_2, whereas the exhaled regenerated gases follow a path indicated by the arrows f_1 (see FIG. 1).

The heat exchanger E is, therefore, operating in counter-current manner to ensure the best possible cooling.

The cooling of the regenerated gases proceeds in an advantageous manner in the space **6** between the element **13**, the source of cooling fluid, and the wall **7** of the element R, before passing through the tube 3_1, the valve 2_1 and arriving at the mouthpiece **1** for inhalation. The cooling fluid at the end of its path of travel escapes towards the exterior through the non-return valve **8**.

A pressure relief valve **9** is provided in the regenerated gas circuit for ensuring a suitable operating pressure for the said circuit.

The space **11**, being filled with non-combustible and even fire-extinguishing cooling fluid also constitutes a protective shield for the breathing bag **5**.

The applicants have carried out experiments showing that the method according to the invention permits a considerable cooling of regenerated gases before inhalation. The results of such an experimentation are given hereinafter by way of example:

Filling of the regenerating element	400 g. of potassium peroxide.
Filling of the cooling element	500 g. of a mixture of 50% each by weight of difluoro-dichloro methane and fluoro-dichloro methane.

—Respiratory level corresponding to a biological consumption of oxygen of 0.800 litre/minute
—Duration of test: 40 minutes
—Ambient temperature: 20° C.
Temperature of the gases on issuing from the apparatus:

	Beginning of test ° C.	End of test, ° C.
Without cooling fluid	21	37
With cooling fluid	17	27

These results show that the method according to the invention permits a distinct improvement in respiratory confort and consequently an increase in the working ability and the safety of the person using the apparatus.

One form of embodiment of a device according to the invention will be described hereinafter.

FIG. 2 shows in partial section the essential details of regenerating and cooling elements G and R respectively; the upper portion of the apparatus being shown in operation and the lower portion before operation.

A frame **50** is provided in which the cooling element R is fitted and on to which the regenerating element G is held fixed by the collar **29**. This frame also carries the parts for initiating the process.

The regenerating element G is generally in the form of a cylindrical container comprising a copper-plated steel sheet casing **28**, perfectly sealing-tight and capable of resisting a certain amount of pressure.

Copper sealing plates are welded on the upper and lower ends of the container. The peroxide for generating oxygen and fixing carbon dioxide is arranged in a suitable manner in this container. At its upper portion, touching the lower wall of the upper end of the sealing plate, there is fixed an ampoule **45** which is sealed and can be made of glass for example. This ampoule **45** contains an aqueous solution of a salt having a low freezing point and a catalyst for decomposition of the peroxide.

Before operating the apparatus, the element G is in the form of an entirely closed, sealing-tight container which can be stored easily during considerable periods of time without there being any need to take special precautions.

The cooling element R comprises an external casing **7**; an upper cover **14** bears on the one hand on a plate **15** comprising a union 15_1 connecting the element R in sealing-tight manner to the inhalation tube 3_1 (FIG. 1) and by way of a sealing ring on an annular part **16** on the other hand. This part **16** serves as an abutment on the upper edges of the wall **7** and by its annular projection 16_2 as a guiding and centering part for the container **13** for the cooling fluid. Passages 16_1 are provided in the projection 16_2 of the part **16**.

The container **13** may be of cylindrical shape and is capable of withstanding a certain amount of pressure.

According to an advantageous form of embodiment, the interior of the container **13** is filled with a porous material which absorbs the cooling fluid and releases it independently of the position of the apparatus in space, and therefore independently of the influence of gravitational force.

At its lower portion, the container **13** is centered by the member **17** which may be in the form of a vertically disposed cylinder provided with through apertures 17_1. This centering member **17** may be integral with a part **18** which serves as a reinforcement for the end of the casing **7**, and by the projections 18_2, as means for guiding a member **21**.

Passages 18_1 are provided in the portion 18_2 of the part **18**. The cooling element R is fixed on the frame **50** by screws **19**.

The container **13** is provided at its lower portion 13_1 with a valve (not shown in the drawings) of a type known per se, for example, a valve similar to that used in aerosol packs. The valve is operated by a simple pressure exerted by the ejector tube **22** forming part of the member **21** guided by the portion 18_2 of the part **18**. The member **21** comprises the ejector tube **22** and the tube **23** connected in sealing-tight manner to the space **11** of the exchanger E by the conduit **12**.

The member **21** is supported by a pin **24** about which it can carry out small pivoting movements. The pin **24** is fixed on a ring **25** fast with a union **26** which can be displaced upwards and applied against the part **50** by means of the sealing ring **27**.

The container is centered by the guiding means 16_2 and **17** and held in position by the spring **20** and the part **16** constituting an abutment against the wall **7**.

The device for triggering operation of the apparatus comprises two levers **30** and **32** pivotably connected to the frame **50** at **31** and **33** respectively, in such a manner that they can pivot in the plane of the drawings. These levers are constantly urged towards one another by means not shown in the drawings such as, for example, a tension spring.

Each of these levers **30** and **32** comprises at its end nearest to the regenerating element G a perforating tube **35** (**39**) mounted fixedly in the union **34** (**38**). The lever **32** also comprises in the region of the cooling element R the union **26** and, by means of the ring **25** and the pin **24**, the member **21**.

In the position of rest, before operation, the two levers **30** and **32** are held spaced from one another by means of a trigger **41**. This trigger can be in the form of a rod, for example, arranged vertically along an upright **51** of the frame **50**, on a pin **42** about which it can pivot in opposition to a spring (not shown) urging the said trigger **41** constantly towards its locking position (see lower portion of FIG. 2) in which its ends are accommodated in recesses of the levers **30** and **32**. The rotation of the trigger **41** can be operated manually by pressure on the said trigger.

The device operates as follows:

The trigger **41** is turned so as to release the levers **30** and **32** which are then urged towards one another.

The perforating tube **35** pierces the copper sealing plate of the upper end of the casing **28** and breaks the ampoule **45**. At the same time, the perforating tube **39** pierces the lower end of the casing **28** and the union **26** is moved upwards entraining the member **21** which by means of the ejector tube **22** opens the valve of the cooling fluid container.

The unions **34**, **15$_1$**, **38** and **26** are connected in sealing-tight manner to the bellows tubes **3** and **3$_1$** and to the inlet and outlet of the breathing bag **5** respectively, the sealing-tightness of the respiratory circuit towards the exterior being ensured by the sealing elements **36**, **40**, **27**, etc.

The ampoule **45** being broken, the solution reacts on the peroxide, releasing a certain volume of oxygen which inflates the breathing bag **5**, the catalyst also permitting the peroxide decomposition reaction to begin.

The cooling fluid passes from the container **13** through the ejector tube **22**, the tube **23** and the conduit **12** into the space **11** between the casing **4** and the breathing bag **5** of the exchanger E and escapes at the end of its travel through the valve **8**.

The exhaled gases pass by way of the non-return valve **37** into the element G; the regenerated gases travel into the breathing bag **5** where their flow is slowed-down by the baffles **10**, for example, thus permitting the first cooling of the said gases by the fluid flowing in the space **11**.

From the breathing bag **5**, the regenerated gases enter the element R by the union **26** and, following the arrows f_1, pass through the passages **18$_1$** and **17$_1$** into the space **6** between the container **13** and the wall, where their cooling proceeds effectively.

Finally, the cooled regenerated gases travel through the passages **16$_1$** and the union **15$_1$**, the bellows tube **3$_1$** and the non-return valve **2$_1$** towards the mouthpiece **1**.

The cooling circuit being connected in a particularly simple and effective manner at the same time as the respiratory circuit, reliable and effective operation of the device are ensured.

The regenerating element and the cooling fluid container being in the form of hermetically sealed elements before they are brought into action, they can be stored for considerable periods of time. Therefore, maintenance of the apparatus is particularly facilitated and simplified.

It will also be appreciated that bringing apparatus into action requires substantially no preparatory work and may be effected immediately.

Many applications may be provided for: self-rescue apparatus or escape apparatus for mines, chemical industry, petroleum industry, nuclear industry etc., and respiratory apparatus for many different uses throughout the world.

Modifications and improvements may be made to the device described by way of example without thereby departing from the scope of the invention.

We claim:

1. Apparatus for regenerating a breathable gas in a closed-circuit heat exchange type individual respiratory device, comprising a hermetically sealed first container of regenerating material that subtracts moisture and carbon dioxide from said gas and adds oxygen to said gas, said first container having perforable opposite ends, a cooling element comprising a second container of cooling fluid, means adapted to direct cooling fluid from said second container toward a heat exchanger, a member to open said second container, a frame in which said two containers are supported, first conduit means for directing gas to said first container, said first conduit means being penetrable through one end of said first container, second conduit means for removing regenerated gas from said first container and adapted to direct said regenerated gas toward said heat exchanger, said second conduit means being penetrable through the other said end of said first container, and means for simultaneously penetrating said first and second conduit means into said opposite ends of said first container and actuating said opening member to direct said cooling fluid toward said heat exchanger.

2. Apparatus as claimed in claim **1**, the last-named means comprising a first lever pivotally mounted on said frame and carrying said first conduit means, a second lever pivotally mounted on said frame and carrying said second conduit means and said opening member, and means for simultaneously moving said levers toward each other.

3. Apparatus as claimed in claim **1**, and a frangible ampoule in said first container and engageable with and frangible by said first conduit, said ampoule containing a catalyst for said regenerating material to promote release of oxygen by said regenerating material.

4. Apparatus as claimed in claim **1**, in which said cooling fluid is a member selected from the class consisting of chlorofluorinated hydrocarbons having not more than two carbon atoms per molecule and mixtures thereof.

5. Apparatus as claimed in claim **1**, in which said regenerating material is selected from the class consisting of alkaline peroxide and alkaline-earth peroxide.

6. Apparatus as claimed in claim **2**, said directing means comprising third conduit means carried by said second lever to engage said frame in sealing relationship to direct said cooling fluid toward said heat exchanger upon movement of said levers toward each other.