P. BAAR.

FIRE BUCKET.

APPLICATION FILED MAY 10, 1912.

1,068,476.

Patented July 29, 1913.

Fig. 3.

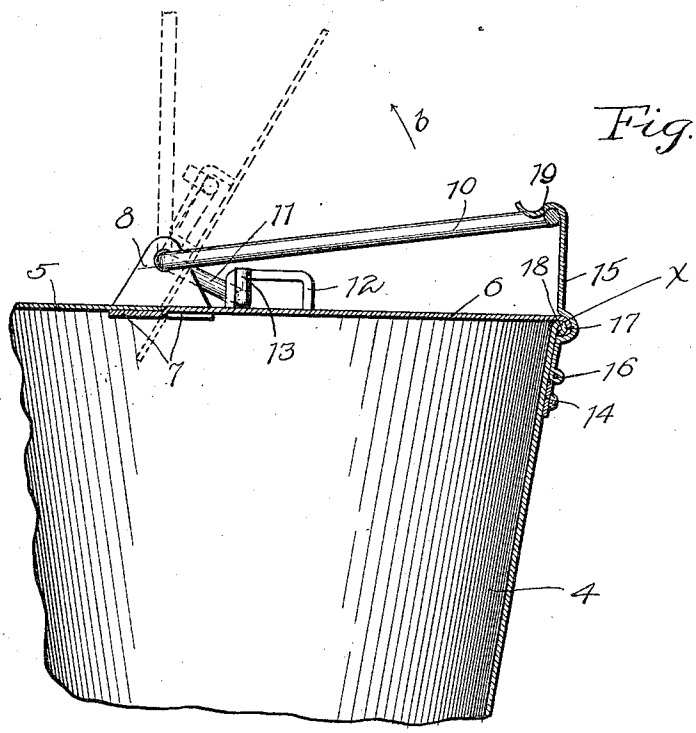

Fig. 1.

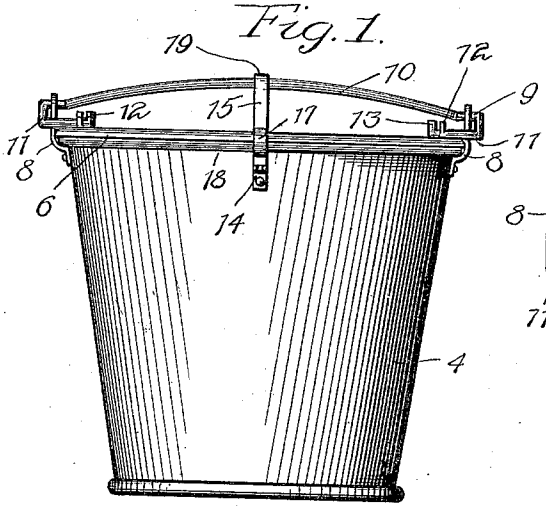

Fig. 2.

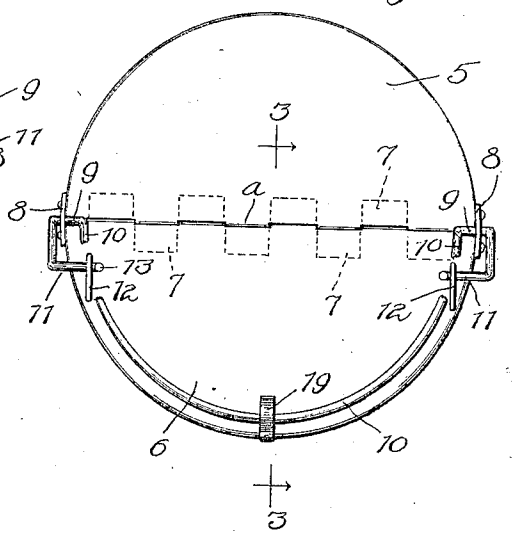

Witnesses:
Robert J. Bracke
Leslie W. Fricke

Inventor
Peter Baar
By Brown & Williams
Attorneys

UNITED STATES PATENT OFFICE.

PETER BAAR, OF CHICAGO, ILLINOIS.

FIRE-BUCKET.

1,068,476. Specification of Letters Patent. Patented July 29, 1913.

Application filed May 10, 1912. Serial No. 696,305.

To all whom it may concern:

Be it known that I, PETER BAAR, a citizen of the United States, residing at Chicago, in the county of Cook and State of Illinois, have invented a certain new and useful Improvement in Fire-Buckets, of which the following is a full, clear, concise, and exact description, reference being had to the accompanying drawings, forming a part of this specification.

My invention relates to fire buckets, that is, buckets which are adapted to hold plain water or chemically treated water to be used in case of fire and which are to be distributed throughout a building, railway car, or other protected premises.

In view of the fact that fire buckets are filled with water and are then given no attention probably for a very great length of time, it is important that some means be provided to guard against evaporation so that the buckets may not unexpectedly be found empty at some critical moment. It will thus be seen that from that standpoint it is advisable to seal the tops of the buckets, but it will at once be apparent that the sealing means can not be such as to make it difficult to open the buckets so that the contents may be thrown therefrom quickly and conveniently.

My invention is directed toward improved means for sealing the bucket and at the same time making it easy to throw the contents therefrom.

In accordance with the principle of my invention, I provide the bucket with two top cover halves, one of which is permanently secured in place and the other of which is hinged so that it may be opened. I provide means associated with the bail for holding down the movable cover in sealed position, when the bucket is not in use, and for automatically opening the movable cover when the contents are to be thrown therefrom.

My invention will be clearly understood by reference to the accompanying drawings, in which—

Figure 1 is a front elevational view of the fire bucket of my invention; Fig. 2 is a plan view thereof; and Fig. 3 is a partial cross-sectional view taken on the plane of the line 3—3 of Fig. 2 and looking in the direction indicated by the arrows.

The body of the bucket is illustrated at 4 and it will be seen that it is provided with the semi-circular top half 5 permanently secured in place. The other top half 6 is hinged to the top half 5 on the diametrical line *a*, each of the top halves being provided with projections 7, 7, which extend through slots in the opposite top half. As shown in Fig. 3, these projections are offset to the extent of the thickness of the sheet metal of which the top is made so that the resulting complete top will be flush.

At each end of the diametrical line *a* the bucket 4 is provided with an ear 8, these ears forming keepers for the trunnions 9—9 of the bail 10. Each of the trunnions 9 has extending therefrom an L-shaped crank 11 which, as shown in Figs. 1 and 2, extends back over the movable half of the cover and is there disposed under a staple 12 secured to that part of the cover. The end of the crank 11 is provided with an upward projection 13 to prevent displacement of the parts. The angle between the bail 10 and the crank 11 is an acute angle, as illustrated in Fig. 3, and it will be seen that when one presses down on the bail 10, he also presses down on the crank 11 and thus effectively presses the movable half of the cover onto the top of the bucket. When the bail 10 is swung around in the direction of the arrow *b*, into the position shown in dotted lines in Fig. 3, the crank 11 engages the staple 12 and pulls the movable half of the cover up with it, the staple being of such length that the hook on the crank may have longitudinal movement therein; this is necessary since the cover and the bail swing about different centers.

At the front of the bucket a keeper 14 is provided and a clamping spring 15 is pivoted at 16 to this keeper. This clamping spring is provided with a loop portion 17 which is adapted to clamp tightly around the bead 18 at the top of the bucket and the rim of the movable cover half 6 which rests thereon. Thus the movable cover is held down tightly at the top of the bucket at three points, at the two sides where the cranks engage, and at the front where the spring clamp engages. The spring clamp has an extension which is provided with a hook 19 which is adapted to clamp down the bail 10, as illustrated in Fig. 3, and preferably is of such disposition that it clamps the bail down under tension so that the cranks 11, 11 will bear down upon the top of the movable part of the cover with suitable pressure. The hook 19 is so formed that it may be quickly and easily grasped to swing

it clear of the handle and it will thus be seen that when the handle is raised in the ordinary manner of manipulating the bucket, the movable cover half will swing open and the contents may be readily thrown therefrom.

It is wise to place some sort of material, some sort of sealing material, such as beeswax, at *x* along the rim of the bucket where it is engaged by the movable cover. This sealing means does not hold the cover in any way, but it prevents the admission of air and consequent evaporation.

I claim as new and desire to secure by Letters Patent:

1. In a fire bucket, a body, a cover hinged thereto, a bail hinged thereto, trunnions on said bail, and cranks on the trunnions of said bail for bearing down on the top of said cover when it is in closed condition, said cranks being disposed at an acute angle with said bail.

2. In a fire bucket, a body, a cover hinged thereto, a bail hinged thereto, trunnions on said bail, cranks on the trunnions of said bail adapted to rest on the top of said cover, said cranks being disposed at an acute angle with said bail, and means for holding down said bail so that said cranks will bear down upon said cover with pressure.

3. In a fire bucket, a body, a cover hinged thereto, a bail hinged thereto, trunnions on said bail, cranks on the trunnions of said bail adapted to rest on the top of said cover, said cranks being disposed at an acute angle with said bail, and staples on said cover over said cranks.

4. In a fire bucket, a body, a cover hinged thereto, a bail hinged thereto, trunnions on said bail, cranks on the trunnions of said bail adapted to rest on said cover, staples on said cover passing over said cranks, and means for holding down said bail so that said cranks will bear down on said cover with pressure.

5. In a fire bucket, a body, a cover hinged thereto, a bail hinged thereto, trunnions on said bail, cranks on the trunnions of said bail adapted to rest on said cover, said cranks being disposed at an acute angle with said bail, and a strap hinged to the front of said bucket and provided with a hook arranged to be clamped over said bail.

6. In a fire bucket, a body having a bead at the top thereof, a cover hinged thereto, a bail hinged thereto, means associated with said bail for holding said cover in place, and a strap hinged to said body and having a part engaging around said bead and an edge of said cover, said strap also serving to clamp over said bail.

7. In a fire bucket, a body having a bead extending around the top thereof, a cover half permanently secured to the top of said body, a cover half hinged to said first named cover half on a diametrical line, ears on said body at the ends of said diametrical line, a bail having trunnions mounted on said ears, means associated with said bail for holding said cover in place, a strap hinged to the front of said bucket, said strap having a part extending around said bead and an edge of said movable cover half, said strap being arranged to clamp over said bail and to hold said bail down under tension.

8. In a fire bucket, a body, a cover hinged thereto, a bail hinged to the body, trunnions extending from said bail, extensions from said trunnions adapted to normally rest on said cover, staples on said cover passing over said extensions, and mechanism for maintaining said bail in a position such that the extensions will firmly press down on said cover.

9. In a fire bucket, a body, a cover hinged thereto, a bail hinged to said body, trunnions extending from said bail, extensions from said trunnions adapted to normally rest on said cover, inclosing members passing over said extensions, and a pivoted member for maintaining said bail in a position such that the extensions will firmly press down on said cover.

10. In a fire bucket, a body, a movable cover therefor, means for sealing the joint between said cover and the body, a bail hinged to said body, trunnions on said bail, cranks on the trunnions of said bail adapted to rest on said cover, staples on said cover passing over said cranks, and means for holding down said bail so that said cranks will bear down on said cover with pressure.

11. In a fire bucket, a body, a cover hinged thereto, means for sealing the joint between said cover and the body, a bail hinged to the body, trunnions extending from said bail, extensions from said trunnions adapted to normally rest on said cover, staples on said cover passing over said extensions, and mechanism for maintaining said bail in a position such that the extensions will firmly press down on said cover.

12. In a fire bucket, a body, a fixed cover covering part of said body, a movable cover, each of said covers having projections extending into corresponding slots from the opposite cover, a bail, means carried by the bail for holding the cover in place, and means for sealing the joint between said movable cover and said body.

In witness whereof, I hereunto subscribe my name this 3rd day of May, A. D. 1912.

PETER BAAR.

Witnesses:

ARTHUR H. BOETTCHER,

LEONARD E. BOGUE.

Copies of this patent may be obtained for five cents each, by addressing the "Commissioner of Patents, Washington, D. C."