Sept. 18, 1934. C. LISKA 1,974,245

KEY HOLDER

Filed March 15, 1933 2 Sheets-Sheet 1

Fig. 1.

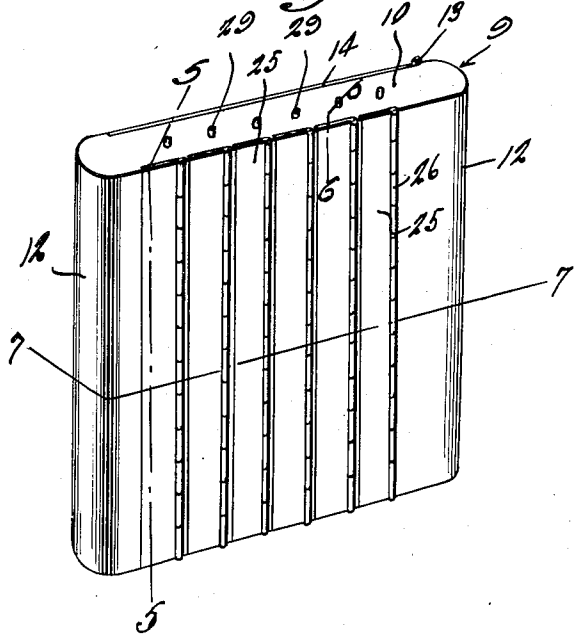

Fig. 5.

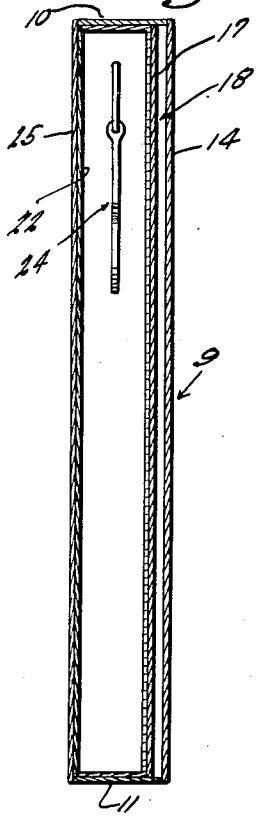

Fig. 2.

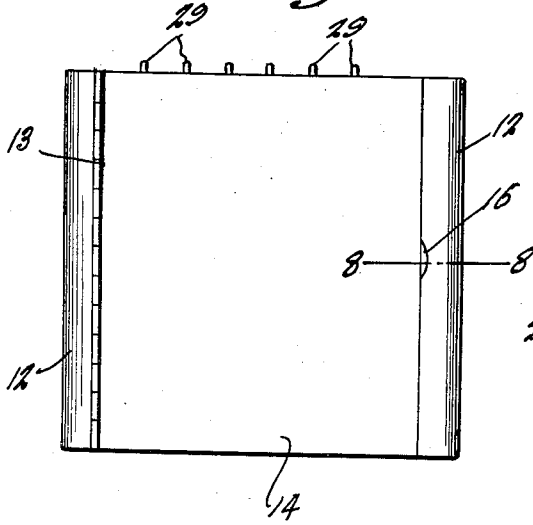

Fig. 6

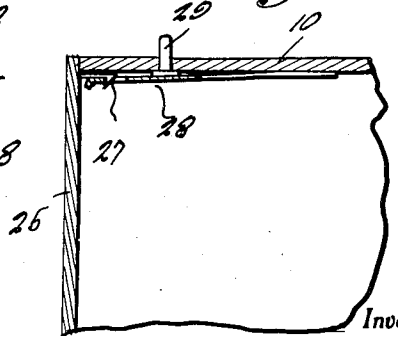

Inventor

Charles Liska

By Clarence A. O'Brien

Attorney

Sept. 18, 1934. C. LISKA 1,974,245

KEY HOLDER

Filed March 15, 1933 2 Sheets-Sheet 2

Fig. 3.

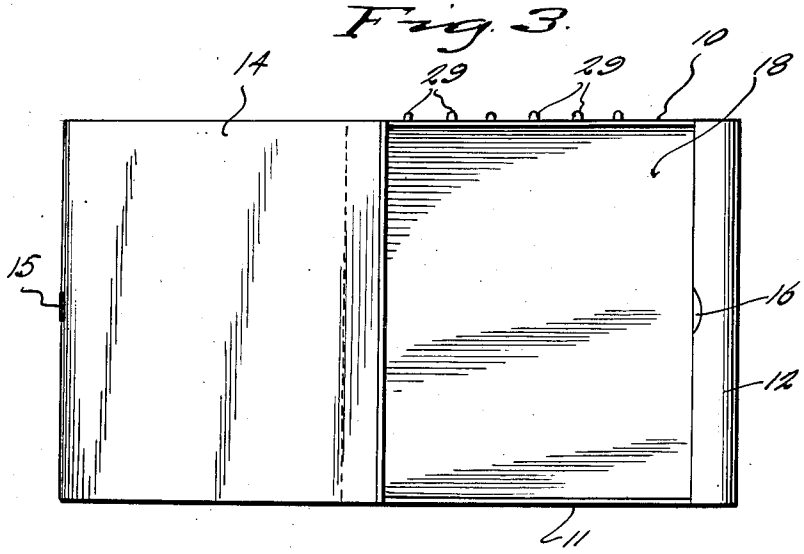

Fig. 4.

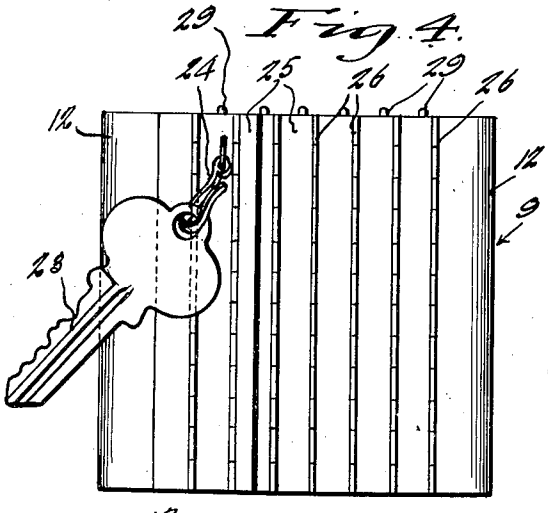

Fig. 8.

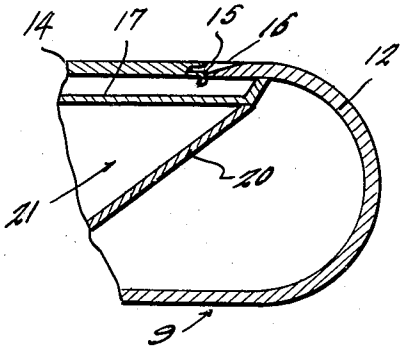

Fig. 2.

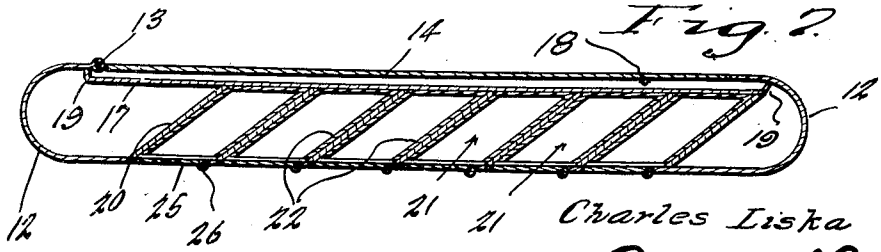

Inventor

Charles Liska

By Clarence O'Brien

Attorney

Patented Sept. 18, 1934 1,974,245

UNITED STATES PATENT OFFICE

1,974,245

KEY HOLDER

Charles Liska, Oceanside, Calif.

Application March 15, 1933, Serial No. 660,916

1 Claim. (Cl. 59—96)

This invention relates to automotive appliances and accessories, and has more particular reference to a unique device constructed to serve primarily as a key holder, as well as a container for a driver's permit card or the like.

Briefly stated, the preferred embodiment of the invention is characterized by a suitably proportioned conveniently and inexpensively made casing equipped with a plurality of individual key compartments having selectively released closing doors thought to be desirable in a structure of this class to aid the user in selecting the desired key in the dark.

More specifically stated, the special structural adaptation which I have perfected embodies the provision of properly located finger buttons satisfactorily arranged to provide easily manipulated trips for the compartment door latches so that by arranging the keys in a predetermined order, they may be expeditiously selected without confusion.

A further feature of the invention is predicated upon the aforesaid adoption of individual key compartments together with a distinguishable card container having an appropriate closure, which feature in conjunction with the key holder provides a practical and feasible combination susceptible of supplying the wants of the average motorist.

Other features and advantages will become more readily apparent from the following description and drawings.

In the drawings:

Figure 1 is a perspective view of the device as constructed in accordance with the principles of the present invention.

Figure 2 is an elevational view of one side thereof.

Figure 3 is a view like Figure 2 showing the cover plate swung to open position to expose the card containing compartment.

Figure 4 is a view of the reverse face or side of the structure showing one of the doors of the key compartment open and a key swung out to useful position.

Figures 5, 6 and 7 are sectional views taken approximately on the planes of the lines 5—5, 6—6 and 7—7 respectively of Figure 1.

Figure 8 is an enlarged detail sectional view taken on the plane of the horizontal line 8—8 of Figure 2.

Referring now to the pictorial drawings by distinguishing reference characters, it will be observed that the numeral 9 designates what may be generally referred to as a pocket-size casing of metal or appropriate material. The top 10 and bottom 11 are somewhat oval-shaped in plan view and the opposite ends 12 of the casing of arcuate or rounded form as shown.

Attached by a hinge 13 to one face of the casing is a relatively large cover or door 14 provided with a suitable fastener 15 (see Figure 8) engageable with an appropriate keeper 16. This cover plate co-operates with a longitudinal divider 17 on the interior of the casing in defining a card container 18. The divider plate is simply formed with laterally bent end flanges 19 as shown in Figure 7 which provide the requisite parallel space between said divider and the cover plate 14 to determine the shape and size of the container 18.

The numerals 20 designate a plurality of longitudinally spaced diagonally arranged vertical partitions which extend between the divider plate 17 and the opposed wall of the casing in defining a plurality of individual key holding compartments 21 of general rectangular form in cross sectional shape. The numerals 22 merely designate a lining for the compartment which lining may be of cork or other suitable noiseless material to absorb metallic sounds of the keys 23. The keys are detachably hung on appropriate clips or hangers 24 mounted in the various compartments. This arrangement provides what might be called cushioned key-holding compartments.

The diagonal disposition of the partitions which define the compartments makes it possible to satisfactorily accommodate the keys without unnecessarily increasing the transverse dimension of the casing as a whole.

Each key compartment 21 is provided with an individual interiorly covered or lined door 25 mounted on separate hinges 26. As shown in Figure 6, each door is provided with a retention element 27 adjacent to which is a spring holding clip 28. Each clip is provided with a button 29 extending up through an opening in the top wall, the buttons being arranged in longitudinally spaced order. They may be properly marked by suitable inscriptions or legends to indicate just what particular species of keys are contained in the respective compartments.

Particular attention is called to the relatively small pocket-size casing suitably shaped and proportioned for convenient carrying in one's pocket equipped with the individual key holding compartments, each compartment having its separate door and trip button therefor. This is an orderly and satisfactory arrangement which is particularly useful when the user desires to select

a predetermined key in the darkness. The provision of the diagonal cushioned key compartment with the selectively usable and properly marked trip buttons constitutes a novel contribution to this particular line of endeavor; particularly when taken into conjunction with the elongated card compartment or container 18 having a suitable closure plate 14 as illustrated in Figure 7 of the drawings.

A careful consideration of the foregoing description in conjunction with the illustrative drawings will enable the reader to obtain a clear understanding of the purpose, features, and advantages, the explicit construction, and the invention as hereinafter claimed.

It is to be understood that minor changes in shape, size, relative proportions, and materials may be resorted to in practice without departing from the spirit of the invention or the scope of the invention as now claimed.

I claim:

A structure of the class described comprising a casing, a plurality of internal vertically arranged diagonally disposed partition members defining individual key compartments of the form of a rhomboid in horizontal cross-section, key holding means in each of said compartments, said casing in one wall thereof, opposite each of said key compartments being provided with a vertically elongated opening, and a hinged door for each of said openings.

CHARLES LISKA.