# United States Patent [19]

**Miller et al.**

[11] **3,912,143**

[45] **Oct. 14, 1975**


[54] **METHOD AND APPARATUS FOR GUIDING STRAND-LIKE MATERIALS**


[75] Inventors: **Paul W. Miller,** Warren; **Norman H. Fobes,** Cortland; **Edward J. Thompson,** Kinsman; **Eugene K. Redman,** Cortland, all of Ohio; **James A. Lavender, Jr.,** New Castle, Pa.

[73] Assignee: **Wean United, Inc.,** Pittsburgh, Pa.



[22] Filed: **Oct. 10, 1973**

[21] Appl. No.: **405,250**

[52] **U.S. Cl.** ..... **226/3;** 226/21; 226/118; 226/199

[51] **Int. Cl.**[2] ..... **B65H 23/32**

[58] **Field of Search** ..... 226/15, 18, 21, 22, 23, 226/118, 119, 180, 199, 3



[56] **References Cited**

UNITED STATES PATENTS

| | | | |
|---|---|---|---|
| 2,513,927 | 7/1950 | Farrington | 226/23 |
| 3,119,535 | 1/1964 | Hoffman | 226/23 |
| 3,312,335 | 4/1967 | Paris | 226/18 X |
| 3,380,678 | 4/1968 | Feasey | 226/118 X |
| 3,401,860 | 9/1968 | Frantzen | 226/199 |
| 3,435,693 | 4/1969 | Wright | 226/18 X |
| 3,730,449 | 5/1973 | Satas | 226/23 X |



*Primary Examiner*—Richard A. Schacher
*Attorney, Agent, or Firm*—Daniel Patch; Henry C. Westin



[57] **ABSTRACT**

One embodiment of the invention pertains to an automatic and precision guiding procedure and apparatus for thin narrow moving steel strip as the strip is collected in a looping or storage device made up of four rolls. One end of each of the rolls is rotatably supported in a stationary frame, while the opposite ends of the rolls are rotatably supported in an orbital mounted frame, the axes of rotation of the rolls being equal distance from the axis of rotation of the rotatable frame.

Much activity in recent years has centered on developing and perfecting a means and method for automatically guiding moving material such as rolled steel strip, incident to the processing of the strip; for example, during its rolling, pickling, annealing, or plating. One of these activities has become generally known as the Lorig self-centering system for strip-like material, which system is covered by a number of U.S. patents, three exemplary ones being U.S. Pat. Nos. 2,593,157, 2,593,158, and 2,706,625.

While such guiding systems have found employment they have not replaced the more conventional guiding procedure of employing edge engaging means for the moving strip. One of the reasons for the continuance of employment of edge guiding means is the additional cost involved in employing the automatic guiding means, even though such means offer the advantage of avoiding the strip physically coming into contact with the rigid edge guiding members of the conventional procedure.


**2 Claims, 5 Drawing Figures**

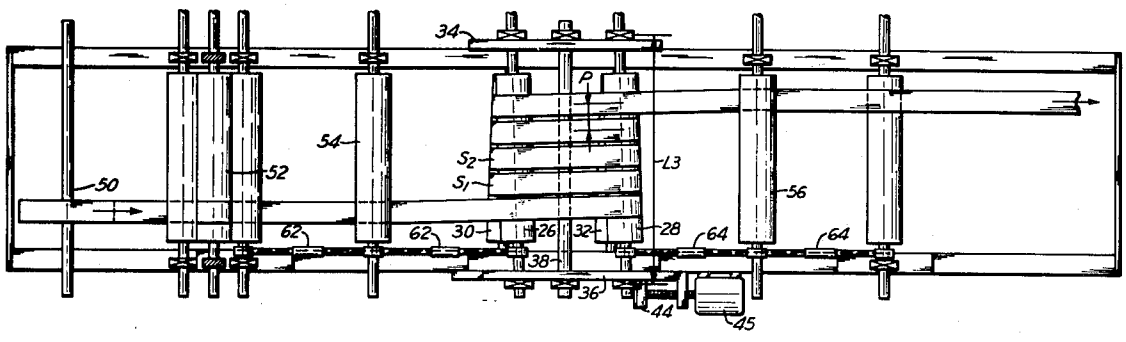

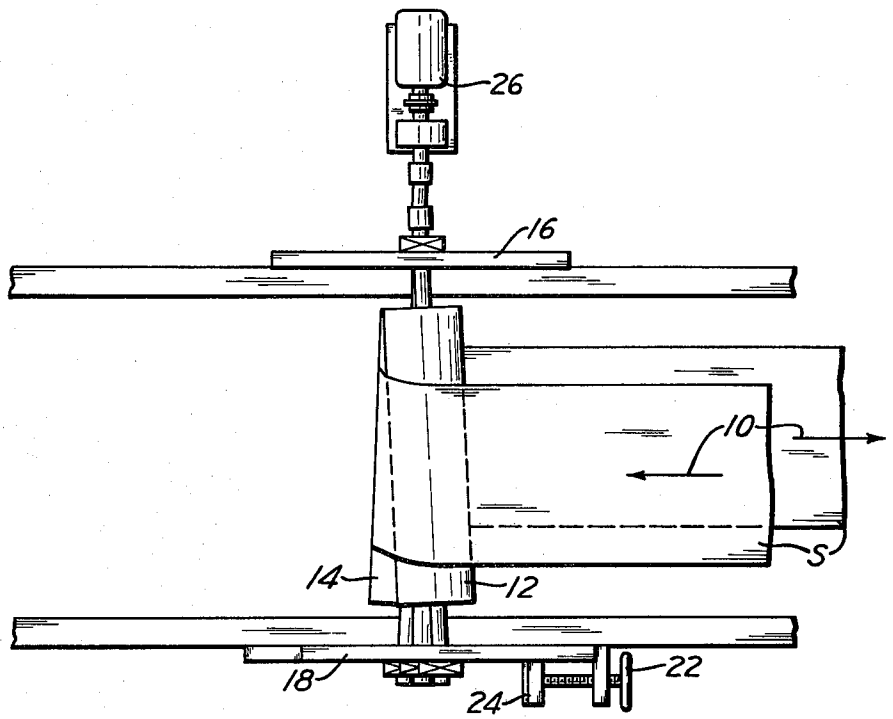


Fig. 1

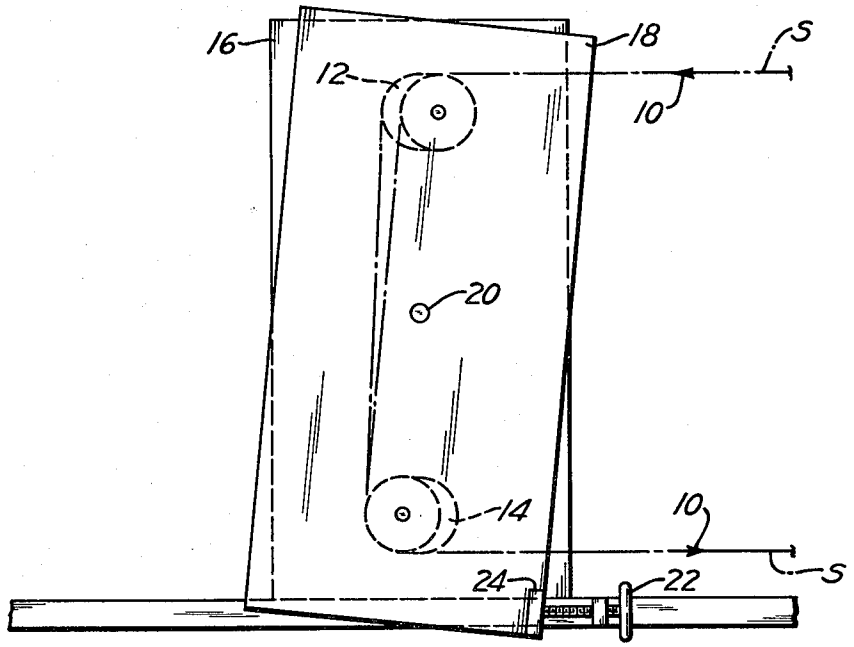


Fig. 2

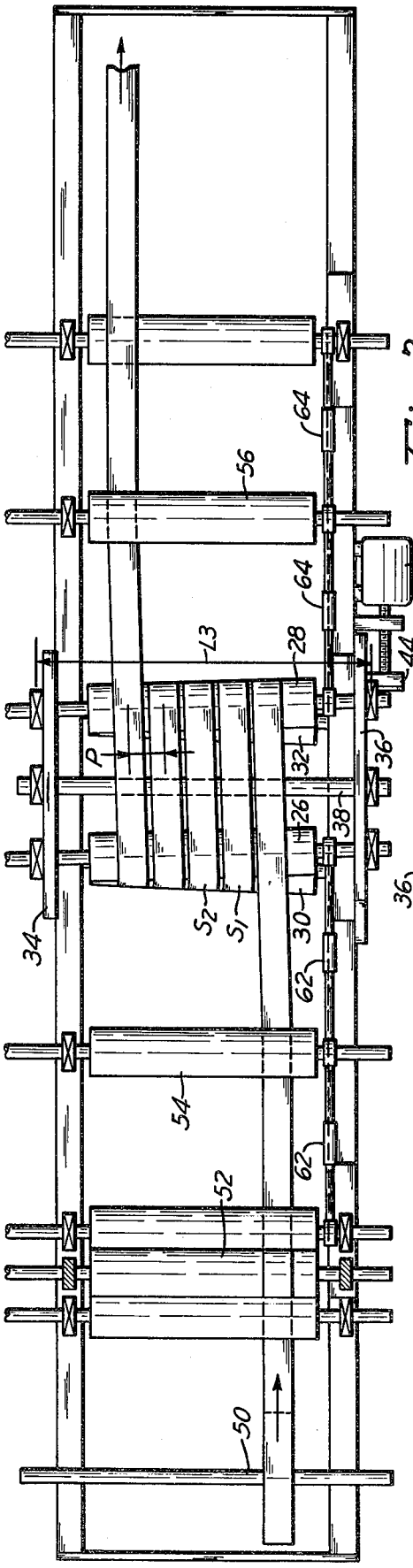
64
56
45
64
L3
28
44
P
32
36
26
38
34
S2
S1
30
62
54
62
52
50

Fig. 3

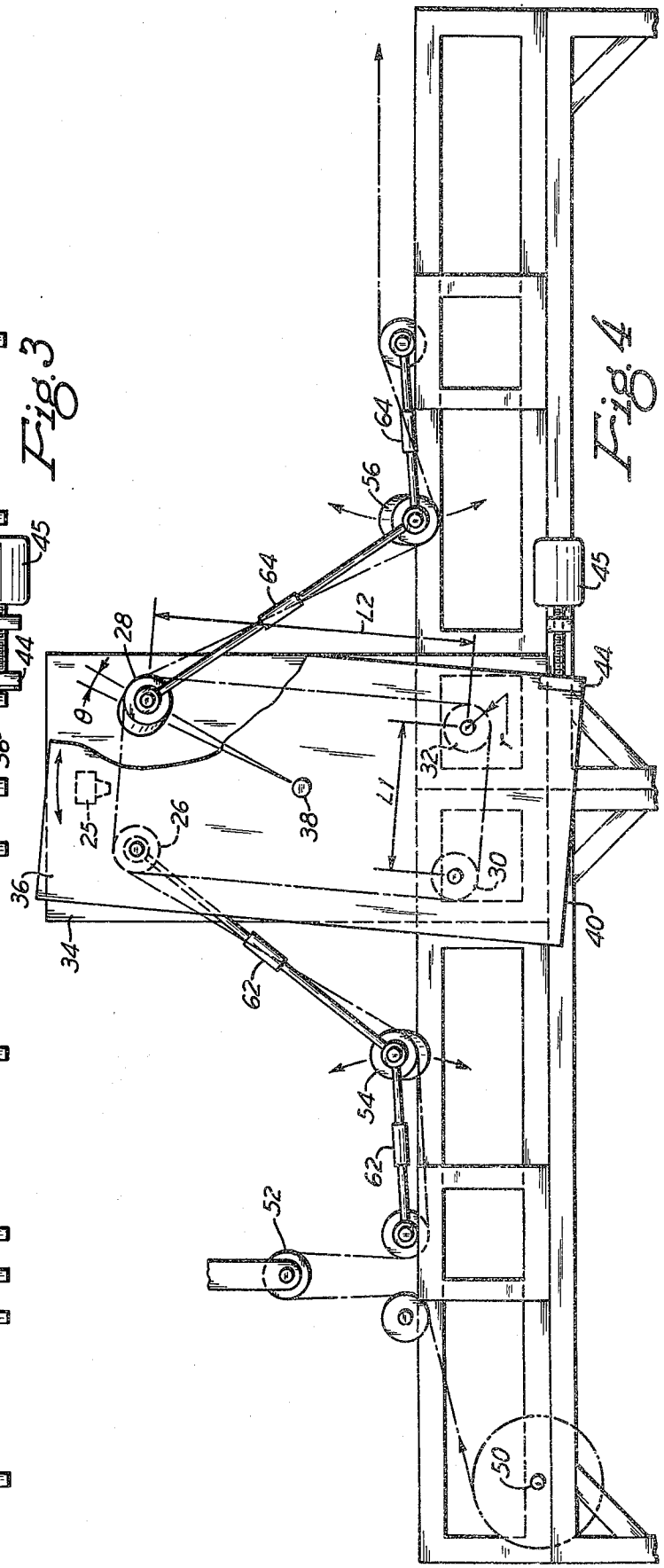
64
56
64
L2
28
45
44
θ
32
r
L1
38
25
26
30
36
34
40
62
54
62
52
50

Fig. 4

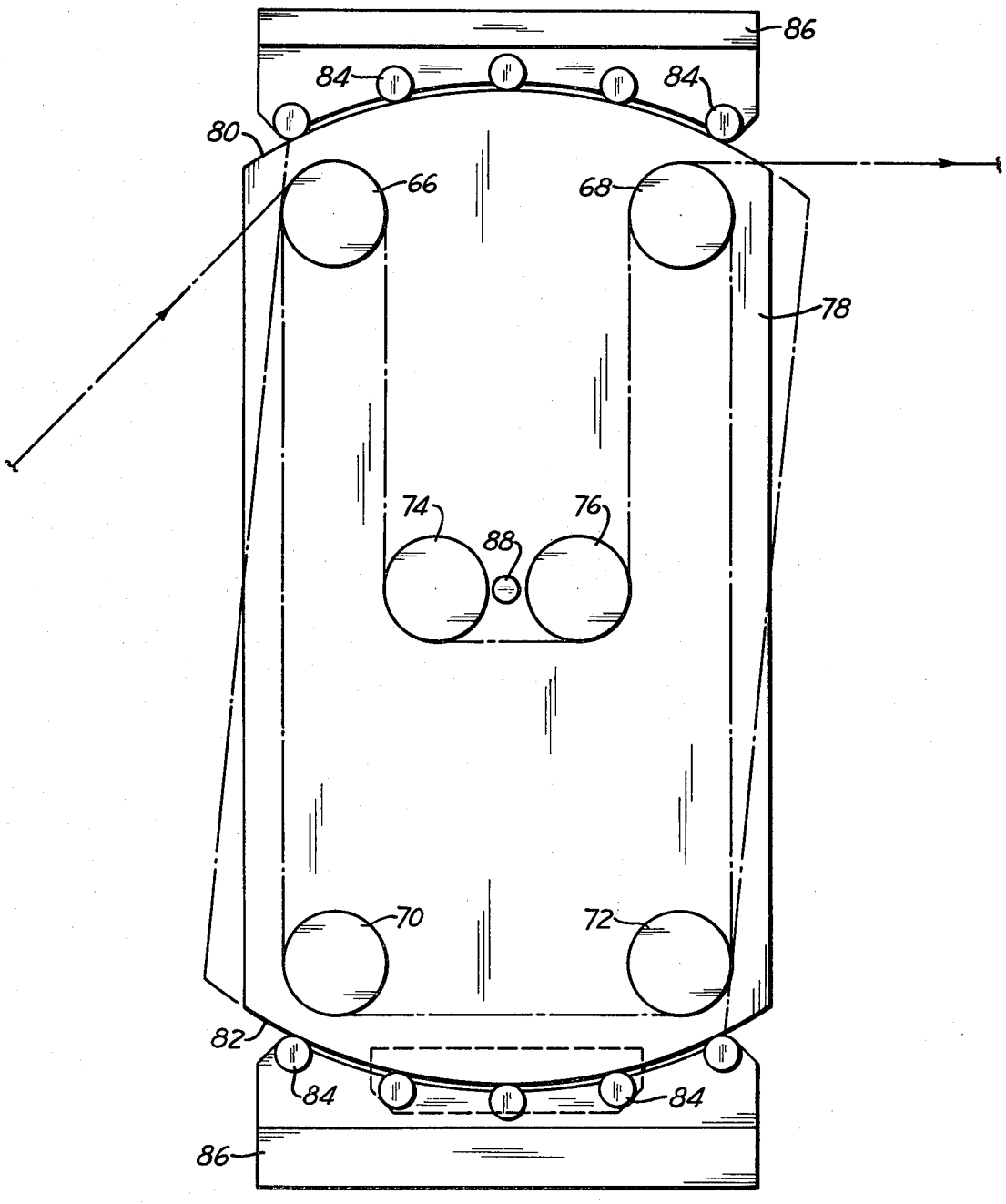


Fig. 5

# METHOD AND APPARATUS FOR GUIDING STRAND-LIKE MATERIALS

The present invention provides a new and different approach to obtaining automatic or self-guiding of a moving strand-like product.

More particularly, the present invention provides a method and apparatus for creating and adjusting frictional forces imposed on the moving strand-like material whereby the material will move automatically to a forced equilibrium condition or position, which condition or position will represent a precise path of travel on which path the material will be maintained automatically.

In one form the present invention provides a method of and an apparatus for automatically guiding moving strip material comprising two or more spaced-apart rolls arranged to be engaged by a passing strip or other strand-like material, one end of the rolls being rotatably supported in a relatively fixed relationship relative to the material, while the other ends of the rolls are displaceable, each about the same fixed axis and in the same circular direction relative to said axis, and in which the rolls are driven so that their surface speeds substantially equal the speed of the material.

It is a further object of the present invention to provide a strip-storage apparatus comprised of four rotatable strip supporting rolls in which the moving strip is fed around a portion of each of the rolls in a manner that a number of parallel spaced-apart strands are stored in the apparatus, means for driving said rolls at a surface speed substantially equal to the linear speed of the material, similar ends of the rolls being rotatably supported in a common stationary frame, while the other ends are rotatably supported in an orbital frame having an axis of rotation equal distance from the centers of each roll, and means for adjusting the orbital frame so that the rolls will develop frictional forces on the moving strip of such a nature to cause each strand to move to a forced equilibrium position defining precise predetermined spaced paths of travel, in which the strands will be automatically maintained in such precise spaced-apart paths of travel during the accumulation and storage of the strands.

These objects, as well as other novel features and advantages of the present invention, will be better understood when the following description thereof is read along with the accompanying drawings of which:

FIG. 1 is a plan view of a two roll guiding arrangement employing the teaching of the present invention;

FIG. 2 is an elevational view of the roll guiding arrangement of FIG. 1;

FIG. 3 is a plan view of a second embodiment of the invention as related to a four roll strip storage apparatus;

FIG. 4 is an elevational view of the strip storage apparatus shown in FIG. 3; and

FIG. 5 is an elevational view of a third embodiment of the invention as applied to a six roll strip storage apparatus.

In referring first to the embodiment illustrated in FIG. 1, there is shown a continuous strip S moving in the directions indicated by the arrows **10.** As shown, the strip moving in a general horizontal path of travel passes over an upper rotatable roll **12,** then vertically downward and under a second lower rotatable roll **14** from where it returns to the right. The rolls **12** and **14**



are rotatably supported in two spaced-apart upright frames **16** and **18,** the frame **16** being stationarily mounted while the frame **18** is designed to orbit or rotate about an horizontal axle **20** supported by means separate from the frame **18,** not shown. Rotation of the frame **20,** and hence, the skewing of the rolls **12** and **14,** which skewed position is in exaggerated form portrayed in FIGS. **1** and **2,** is accomplished by a handwheel **22** and a screw-nut assembly **24,** by which agency the frame can be accurately displaced in both a clockwise and a counter-clockwise direction. In this movement the ends of the rolls supported in the stationary frame **16** are free by virtue of universal bearing mountings to move angularly as are the ends of the rolls supported by the rotatable frame **18.** Because of the location of the respective rolls relative to the equal distance axis of the rotation of the frame **18,** the upper roll **12** moves in an opposite horizontal direction from the movement of the lower roll **14.** The ends of the rolls associated with the stationary frame **16** are driven by electrical motors **26,** shown in FIG. **1** at a speed so that the surface speeds of the rolls substantially equal the linear speed of the strip.

The strip S passing around the rolls **12** and **14** is subject to a tension, which tension may be very slight but sufficient, to maintain the strip in contact with the faces of the rolls to establish sufficient frictional forces between the strip and rolls. The means for establishing the tension on the strip and a more complete showing of one application of the rolls **12** and **14** can be seen in referring to U.S. Pat. No. 2,830,809 that issued on Apr. 15, 1958 to P. Maroco, et al., in which the rolls can be used in place of the guide roll that is mounted on the horizontal movable slack producer car. The forces are controlled and adjusted by the degree of skewing or tilting of the rolls to cause the strip to move to a forced equilibrium position, which will be that position where the longitudinal axis of the strip and the major axis of the roll are perpendicular to each other, which position will represent and define a precise predetermined path of travel, in which the strip will be automatically maintained in the precise path of travel during its travel around the rolls.

The degree or amount of skewing or tilting of the rolls can either be accomplished by adjusting the rotation of the frame **18** until a stable running condition is obtained for the traveling strip or it can be determined beforehand by use of a mathematical computation that takes into account the various parameters or factors involved in obtaining the self-centering condition for a given strip or strands of material. Once obtained, the self-centering conditioning will be maintained even on a variation in the speed of the strip or the tension in the strip. By employing the following equation it can be determined for a desired pitch or axial position of the strip relative to the axes of the rolls **12** and **14,** the precise amount of displacement of the frame **18** in degrees so that the position of the rolls can be pre-set before the rolls receive the strip. This setting, if desired, can be done from a control booth remote from the actual location of the rolls and can be accomplished by a strip travel detecting means, schematically shown in FIG. **4** at **25,** associated with the strip designed to detect an off-path condition of the strip and send a signal to the means adapted to displace the frame to cause the strip to move to a desired path of travel. It will be appreciated that while this formula is addressed to a four roll

arrangement as shown in FIGS. **5** and **6**, which involve pitches between two or more strands of the material, the factors and relationships are applicable just as well to a two roll arrangement as shown in FIGS. **1** and **2**, in which case P would represent the center of the incoming strip relative to the center of the out-going strip. The formula is represented as

$$\left[\Theta = 2 \arcsin \frac{L3}{\sqrt{(L1^2 + L2^2)}\left(\left[\frac{2(L1 + L2 + \pi r)}{P}\right]^2 - 1\right)}\right]$$

in which:

$L1$ = horizontal distance between two horizontal co-planar rolls,

$L2$ = the vertical distance between two co-planar vertically arranged rolls,

$L3$ = the distance between the bearings of any one of the rolls,

$r$ = the radius of the rolls, and

$P$ = the pitch in units between the adjacent strands supported by the rolls.

The factors of the equation are identified in FIGS. **3** and **4**. For the purpose of further illustration, two different examples of pitches will be now discussed. For a pitch of five inches of carbon rolled steel strip 2 inches wide the rotational position in a clockwise direction of the frame **18**, as one views FIG. **4**, was computed to be **6** degrees. For the same strip, but for a 10 inches pitch condition, the angle $\theta$ was found to be 12°.

With reference again to FIGS. **3** and **4**, which pertain to an apparatus for accumulating and storing a number of spaced-apart strands **S1** and **S2**, there is provided four strand supporting rolls **26, 28, 30** and **32**. These rolls, as in the case of the rolls **12** and **14**, are mounted for both rotatable and angular movements in a stationary frame **34** and a rotatable or orbital frame **36**. The axes of the rolls arranged in the corners of the frames are arranged equal distance from an axle **38** of rotation of the frame **36**. In the two roll arrangement of FIGS. **1** and **2**, the object was to maintain the strip at the center of the roll face of the rolls, whereas in the embodiment now being discussed, the object is to maintain the pitch of the strands **S1** and **S2** in precise equal distance paths of travel. Consequently, pitch (P) becomes an important factor in the aforesaid equation.

FIGS. **3** and **4** show that the frame **34** is supported stationarily by a base **40** which also carries the axle **38** for the orbital frame **36**. The base also supports the electrical motors, not shown, for driving the rolls **26 – 32** at a speed substantially synchronous with the linear speed of the strip. The adjustment of the frame **36** is accomplished by a screw-nut arrangement **44**, the screw being held against axial movement but driven by a motor **45** while the nut is held in the frame **36** by a yoke that permits limited pivotal movement of the nut.

The strip is fed to the storage device from the left, as one views FIGS. **3** and **4**, from a pay-off reel **50**. A three roll tension device **52** is provided between the reel **50** and the storage device to maintain the strip under a desired tension condition. Immediately before and after the first and last rolls of the storage device, the strip engages entry and delivery rolls **54** and **56** which are mounted and adapted to rotate similar to the storage rolls **26 – 32**.

As can be seen clearly from FIG. **3**, the strip issuing to and from the storage unit must take a deflected path of travel due to the angular position of the rolls **26** and **28**. This deflection of the strip has been found to have a very disturbing influence on the self-centering guiding of the strands unless it is properly guided to and from the rolls **26** and **28**, respectively. In this connection it was found that the employment of rolls similar to deflection rolls **54** and **56** stabilizes the strip so that the automatic self-centering effect accomplished by the rolls **26 – 32** will not be disturbed. This stabilization is due to the placement of the strip at a perpendicular relationship to the axes of the rolls **26** and **28**. Accordingly, one of the ends of each roll **54** and **56** is mounted for angular movement in a portion of the stationary base **40** and the other ends are rotatably supported and angularly displaceable by being carried by a pair of turn buckles **62 – 64**.

The degree or extent of skewing of the rolls **54** and **56** has been found to require less than that required for the roll **26 – 32**. The skewing of the rolls **54** and **56**, however, is coordinated with the skewing of the rolls **26 – 32** by means of the interconnecting turn buckles **62 – 64** so that on rotation of the frame **36** there will be a similar movement of the rolls **54** and **56** and the predetermined skew relationship between the rolls **54** and **56** and **26–32** will be maintained.

The strip leaving the storage unit may be fed to other associated strip processing equipment, not shown. It will be appreciated that while discussing the embodiment of the invention, thus far the invention has been related to narrow thin rolled steel strip, the invention can be used for other strand-like material; such as wire, tubing, belting, and the like.

Coming now to the embodiment of FIG. **5**, there is shown a six roll arrangement **66, 68, 70, 72, 74** and **76** of a strip accumulating and storage device. The strip or strands supporting rolls are mounted in end frames similar to the embodiment of FIGs. **3** and **4** and driven in the same fashion, the end frame **78** being the orbital one for which reason it is provided with an upper and a lower circular surface **80** and **82** that engage a series of roller bearings **84** supported in stationary frames **86**. The two additional rolls **74** and **76** in this embodiment are arranged in the center of the frames co-planar to and equal distance from the axis of the pivot axle **88** of the frame **78**.

The first strand of the strip S is fed over the upper left roll **66** towards the near end of the roll and then under the two center rolls **74** and **76**. From here the strand is passed over the upper right roll **68**, then to the two lower rolls **72** and **70**, and hence, back to the upper left roll **66** to begin the next strand. The strand leaves this storage unit from the upper right roll **68**. The center rolls **74** and **76**, in addition to adding to the capacity of the storage device, also may be employed to allow for increased time in the case where the device is employed in combination with a strip treating apparatus where a desired lap time is required.

While only four different forms of the invention have been shown and described, including the rolls **54** and **56,** the discussion of the self-centering influence of orbiting one end of a contacting element while the other end of the element is held in a non-orbital condition can be applied to many other conditions and types of material.

In accordance with the provisions of the patent statutes, we have explained the principle and operation of our invention and have illustrated and described what we consider to represent the best embodiment thereof.

We claim:

**1.** A method of processing a continuous moving strip of material while passing through a working station comprising the steps of:

feeding said strip to spaced-apart roller means arranged in said station in a manner that the strip is supported by and between said roller means and caused to assume two or more side-by-side spiral paths of travel and wherein each portion of said supported strip is exposed a number of times to a working zone,

causing similar ends of said roller means to be displaced by rotation about their opposite ends and about a common axis from which they extend equal distance,

varying said displacement to cause the frictional force between said roller means and strip to move the strip axially of said roller means to a force equilibrium position relative to said roller means whereby adjacent supported portions of said strip are maintained parallel to each other assuring said number of exposures thereof.

**2.** A method of processing continuous moving strip of material according to claim **1,**

the further step of causing said strip to take a rectilinear spiral path of travel around said roller means in which said strip is caused to contact only a relatively small portion of each of said roller means and in a manner that there are formed opposed exposed portions of said strip, and

subjecting said exposed portions of said strip to a working condition.

* * * * *