No. 790,853. PATENTED MAY 23, 1905.

J. F. REDDY.

FLANGE WRENCH.

APPLICATION FILED APR. 11, 1903. RENEWED OCT. 20, 1904.

2 SHEETS—SHEET 1.

Fig. 1.

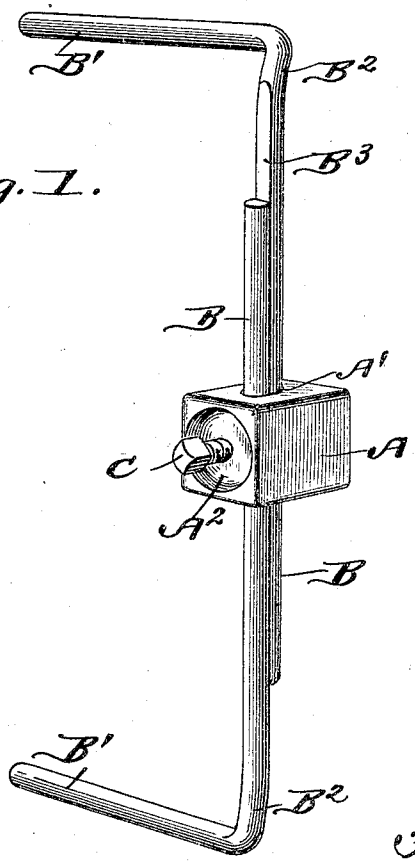

Fig. 2.

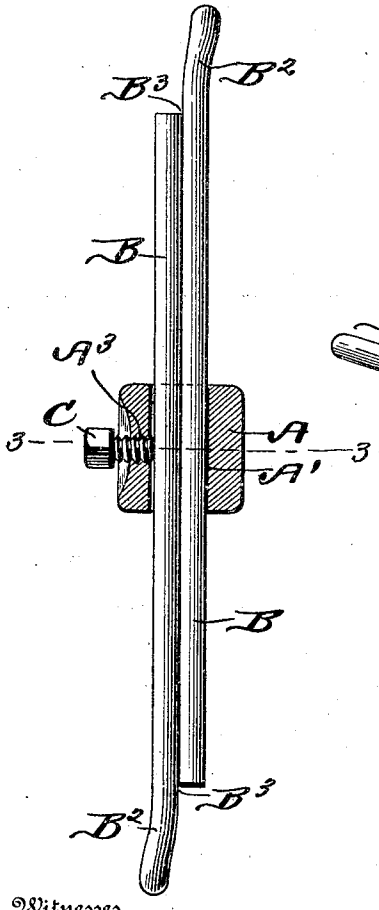

Fig. 3.

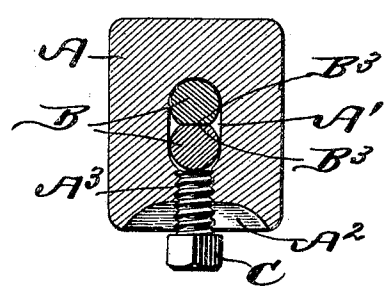

Inventor

James F. Reddy.

Witnesses

M. D. Blondel

Clarence Shaw

By O'Meara & Brock,

Attorneys

No. 790,853. PATENTED MAY 23, 1905.

J. F. REDDY.

FLANGE WRENCH.

APPLICATION FILED APR. 11, 1903. RENEWED OCT. 20, 1904.

2 SHEETS—SHEET 2.

Fig. 4.

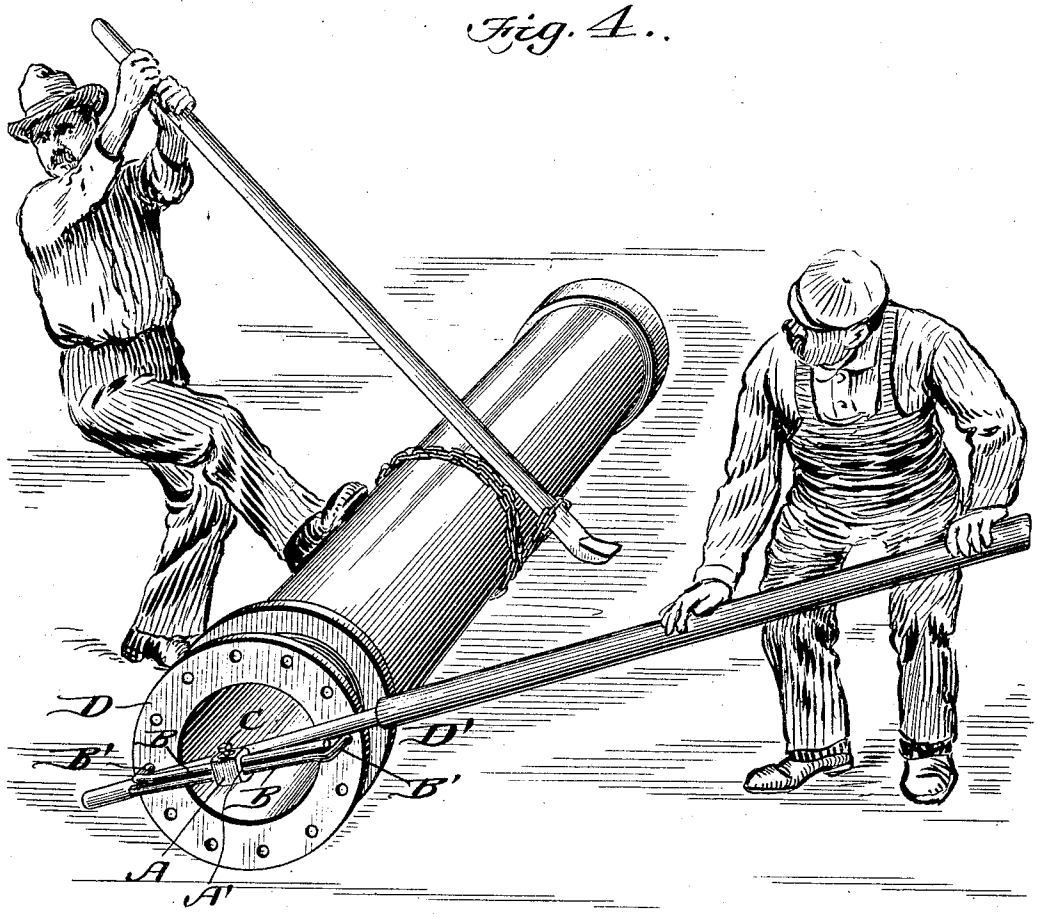

Fig. 5.

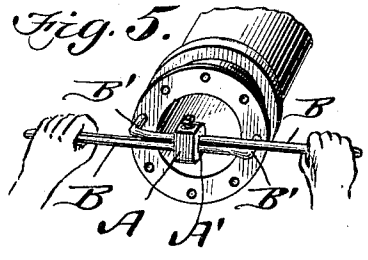

Witnesses

M. L. Blondell

Clarence Shaw

Inventor

James F. Reddy.

By O'Meara & Brock,

Attorneys

No. 790,853. Patented May 23, 1905.

UNITED STATES PATENT OFFICE.

JAMES F. REDDY, OF ROCHESTER, NEW YORK.

FLANGE-WRENCH.

SPECIFICATION forming part of Letters Patent No. 790,853, dated May 23, 1905.

Application filed April 11, 1903. Renewed October 20, 1904. Serial No. 229,267.

To all whom it may concern:

Be it known that I, JAMES F. REDDY, a citizen of the United States, residing at Rochester, in the county of Monroe and State of New York, have invented a new and useful Flange-Wrench, of which the following is a specification.

This invention is an improvement in wrenches, and relates particularly to flanged wrenches—that is, a wrench that is specially adapted for use in screwing flanges upon large and small pipes, and particularly upon flanges that are not adapted to wrenches of the ordinary kind and known as "monkey-wrenches."

The object of my invention is to provide a device that shall be strong and durable in construction, cheap as to cost, and exceedingly simple and efficient in operation; and with these briefly-stated objects in view my invention comprises certain details of construction and novelties of combination and arrangement, as will be fully set forth in the following specification and pointed out in the claims, reference being had to the accompanying drawings, in which—

Figure 1 is a perspective view of my improved wrench. Fig. 2 is a front view of the same, showing the block in section. Fig. 3 is a detail sectional view drawn on about the line 3 3 of Fig. 2. Fig. 4 is a perspective view showing the manner of using the wrench in connection with a pipe of large diameter. Fig. 5 is a perspective view showing the manner of using the wrench on a smaller pipe.

In carrying out my invention I employ a substantially rectangular-shaped block A, which may be of cast or forged metal and having an elongated aperture A′ running therethrough from end to end, and operating through this aperture are the rods B, preferably made of steel, and each rod has its outer end bent at right angles to the main portion to form a finger B′, and at the point immediately adjacent the fingers each rod is curved laterally, as shown at B^2. These rods are designed to lie flat against each other, and each has its abutting face flattened, as shown at B^3, so that they may rest firmly in place, a set-screw C being employed for binding the rods together, and therefore holding them in their adjusted positions. In practice I prefer to dish or concave the face of the block, as shown at A^2, where the set-screw passes, so that but few threads A^3 will be required to be cut.

In operation the rods are drawn apart, so that the fingers will snugly fit the flange that is to be screwed upon the pipe, and the set-screw adjusted to clamp the rods in such position, and after being so arranged the rods may be grasped and turned after the manner of using an ordinary die-stock, and the flange may be quickly and tightly screwed in position, as shown in Fig. 5; but where a pipe of large diameter is to be fitted with a perforated flange D, as shown in Fig. 4, the finger of one rod engages a perforation on one side of the flange, the finger of the other rod engaging a perforation on the opposite side of the flange, and a bar-lever D′ has an end projected under one of the fingers, the bar resting on the other finger as on a fulcrum. By bearing down on the bar the flange can be turned and screwed into the pipe as tightly as desired. The pipe on which the flange is being placed is held stationary in any desired manner.

From the foregoing it will be seen that I have provided an exceedingly simple and durable device that will be found particularly useful by plumbers, steam-fitters, boiler-makers, engineers, and the like.

Having thus fully described my invention, what I claim as new, and desire to secure by Letters Patent, is—

1. In a flange-wrench the combination of the block having an aperture arranged therein, rods passing through said aperture and overlapping each other, the abutting faces of the rods being flattened, the finger portions formed upon the rods, and the set-screw for clamping the rod in position, substantially as shown and described.

2. A device of the kind described, comprising a block having an elongated opening and a threaded opening communicating with the said elongated opening, the face of the block in which the threaded opening is produced being concaved, and the rods passing through

the said elongated opening, said rods being adapted to overlap each other and have their abutting face flattened, each rod having its end bent to form a finger portion, and also curved laterally at the point immediately adjacent the fingers, and the set-screw operating through the threaded aperture for clamping the rods firmly in position, all substantially as and for the purpose specified.

JAMES F. REDDY.

Witnesses:
WM. MILLIGAN,
JOHN J. MEYER.