March 16, 1926.

P. MULLEN

1,576,986

CHAIN HOIST

Filed Feb. 11, 1925

Fig. 1.

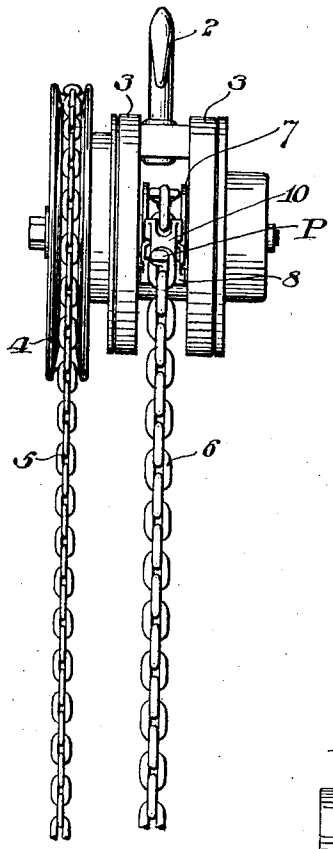

Fig. 2.

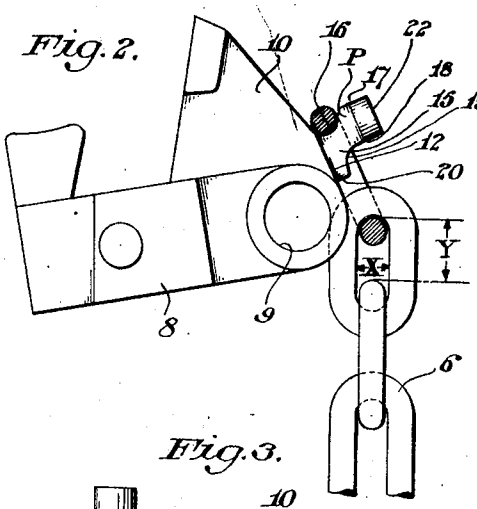

Fig. 3.

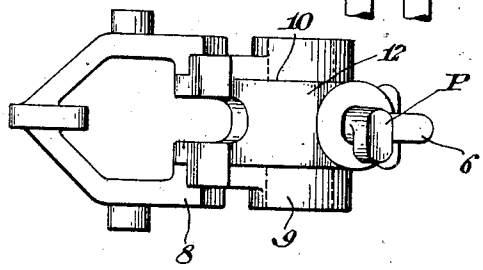

Fig. 5.

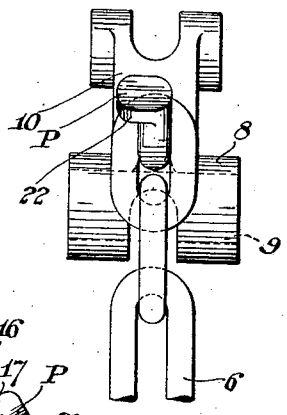

Fig. 4.

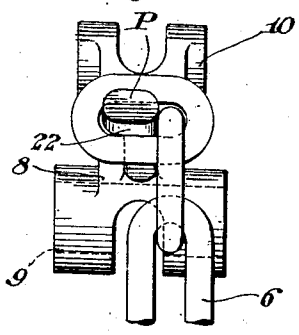

Fig. 6.

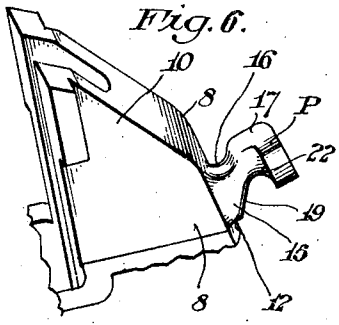

Inventor:
Peter Mullen,
By Blount & Helbert
Attorneys.

Patented Mar. 16, 1926. 1,576,986

UNITED STATES PATENT OFFICE.

PETER MULLEN, OF PHILADELPHIA, PENNSYLVANIA, ASSIGNOR TO THE HARRINGTON COMPANY, A CORPORATION OF PENNSYLVANIA.

CHAIN HOIST.

Application filed February 11, 1925. Serial No. 8,345.

To all whom it may concern:

Be it known that I, PETER MULLEN, a citizen of the United States, and a resident of the city of Philadelphia, in the county of Philadelphia and State of Pennsylvania, have invented certain new and useful Improvements in Chain Hoists, of which the following is a specification, reference being had to the accompanying drawing.

In certain forms of chain hoists the weight which is to be raised is supported at the free end of a chain known as the load chain which extends vertically from the weight to and over a sheave forming a part of the hoist, the slack of the chain behind the sheave being allowed to hang in a bight or loop and its end being attached to some convenient part of the hoist. As the requirements of structural design of a chain hoist necessarily limit the number of places at which the dead end of the load chain may be so attached, it has been found convenient to secure the chain to a portion of the mechanism known as the load chain guide which is a member through which the chain passes downwardly after leaving the sheave and which ordinarily performs certain functions in the operation of the hoist to which it is unnecessary to refer. As a means of attaching the chain to the guide it has been customary to provide upon the latter an overhanging lug having a depending part sufficiently offset from the body of the guide to permit the insertion of the last link of the chain and to then drill horizontally through the said overhanging part and into the body of the guide and tap the hole thus formed in the latter so that a bolt may be inserted through the lug and screwed into the body of the guide, the part of the bolt exposed between the lug and the guide extending through the chain link and forming a support therefor. This arrangement is open to certain disadvantages, among which may be mentioned the necessity of employing a wrench or the like to unscrew the bolt before the chain can be detached, the loss of time entailed in screwing and unscrewing the bolt when attaching or detaching the chain and the expense involved in the requisite drilling and threading of the parts during the manufacture of the hoist.

It is therefore an object of my invention to provide improved means for detachably securing the dead end of the load chain of a chain hoist to a suitable part thereof such as the load chain guide, said means being of such character as to prevent accidental detachment of the chain and to properly and adequately secure and maintain the end of the chain in position and afford the requisite support therefor while permitting the chain to be instantly attached to or detached from the hoist without the use of tools.

A further object of the invention is to provide means of the character aforesaid which may be formed integrally with that part of the hoist to which the chain is to be secured, said means being adapted to be formed with said part when the same is cast, die-forged or the like and requiring no subsequent machining, thus materially lessening the cost of manufacture.

My invention further includes other objects and novel features of design, construction and arrangement hereinafter more fully set forth or which will be apparent from the accompanying drawing forming a part hereof and in which I have illustrated one embodiment of my invention as applied to a chain hoist of well known form.

In the said drawing Fig. 1 is a somewhat conventional side elevation of the hoist including portions of the load chain and the hoisting chain; Fig. 2 is an enlarged front elevation of the load chain guide removed from the hoist but disposed with respect to to the horizontal base line of the drawing in substantially the position which it occupies when assembled in the hoist and also showing a portion of the end of the chain as operatively secured thereto. Fig. 3 is a top plan view of Fig. 2; Fig. 4 an end elevation thereof showing the manner of attaching or detaching the chain, and Fig. 5 a similar view but showing the chain in attached, operative position. Fig. 6 is a fragmentary perspective view of the load chain guide showing my improved chain attaching and supporting means. The same symbols are employed to designate the same parts in the several figures.

It will be understood that as the invention is capable of use with different forms of hoists, the precise construction and arrangement of the hoist itself is immaterial but to enable a proper understanding of the invention a well known form of hoist embodying

a load chain guide of the character above referred to and which forms a convenient point of attachment for the dead end of the load chain is shown in Fig. 1 in a somewhat conventional way, said hoist embodying inter alia a supporting hook 2, housings 3—3 enclosing the internal mechanism of the hoist, which forms no part of the present invention, an operating chain sheave 4 carrying an operating chain 5 through which the power is applied to the hoist and a load chain 6 which passes over a load chain sheave 7 rotatably disposed between the housings 3—3. Between the housings and adjacent this sheave is disposed the load chain guide 8 carried on a suitable stud (not shown) which in the assembled hoist passes transversely through the bore 9 near the end of the guide which latter embodies a web 10 of appreciable width symmetrically disposed between the side faces of the guide and extending vertically above the main portion of the guide. In the particular form of hoist illustrated this load chain guide is utilized as a point of attachment for the dead end of the load chain, but in other forms of hoists some other part thereof might with equal facility be utilized for this purpose and in consequence further description of the specific designs and construction of the load chain guide or its function in the hoist save as such point of attachment is immaterial for a proper understanding of the present invention.

In accordance with my invention I dispose on the outer end face of the guide conveniently more or less adjacent the base of the web 10 a post or lug generally designated as P and preferably form the surface of the guide adjacent the base of the post to extend in a forwardly inclined plane forming an angle of substantially 60° to the horizontal when the guide is in operative position in the hoist and thereby inclined somewhat downwardly and forwardly as shown in Fig. 2. From this surface 12 the post extends upwardly and outwardly with its axis preferably substantially normal to the said surface and the particular conformation of the post will now be described.

The main body 15 of the post is slightly less in width than the distance X between the side portions of the links of the load chain so that the post can extend between them while the upper surface of the post, adjacent its conjunction with the surface 12, is provided with a transversely extending groove 16 substantially conforming in both directions to the inside curvature of the end link of the chain so that when the latter is disposed over the post, as hereinafter described, the end of the link will seat in the groove as clearly shown in Fig. 2. Continuing outward from the outer edge of the groove 16 the upper surface 17 of the post may be substantially flat and extend in a direction approximately normal to the surface 12 while the corresponding under surface 18 of the post may preferably substantially parallel the said upper surface. From the inner end of this under surface 18 and at a distance from the surface 12 substantially equal to the thickness or diameter of the material of which the chain links are composed, said under surface is curved downwardly and forwardly as at 19 to finally substantially parallel the surface 12 and is then directly sharply inwardly and forwardly approximately normal to the said surface to meet the latter, thus providing a considerable body of metal more or less beneath the groove 16 so as to strengthen the post in the direction in which the pull of the chain is exerted when the latter is attached without interfering with the proper seating of the end link of the chain over the post and its operative disposition adjacent and substantially parallel to the surface 12.

It will thus be observed that the main part or body 15 of the post is of such size and shape as to rest within the end link of the chain and afford substantially vertical support to the latter with the curved upper inner end surface of the link resting in the groove 16, the upward inclination of the post and disposition of the groove tending to urge the link against the surface 12 so as to bear upon the same so that the said surface assists in supporting the link against the downward pull exerted by the weight of the chain, and it will further be observed that in the absence of the means now to be described the end link of the chain could be readily disengaged from the post by lifting it upwardly and outwardly without altering the relative assembled position of the link and the post. However, as it is desirable to prevent accidental disengagement of the link from the post, I provide the outer end of the post with an integral substantially elliptical head 22 disposed with its major axis extending substantially horizontally and with one of its ends, conveniently the right end when viewed as in Fig. 4, flush with the adjacent side of the post and its other end overhanging the opposite side of the post as clearly shown in said figure, the length of the major axis of the head being slightly less than the distance Y, that is, the clearance between the inner end of one of the chain links and the outer end of the adjacent intersecting link and the length of the minor axis of the head being slightly less than the distance X. Thus when the end link of the load chain is turned horizontally and its intersecting link moved to one end of the slot therein, said link, as shown in Fig. 4, can be readily slipped over the head 22 and after clearing the same, turned to a vertical position as shown in Fig. 5 in

which latter position the overhanging position of the head overlaps a part of the link and prevents its detachment from the post so long as the link remains in vertical position. As under operative conditions the hoist is usually suspended by the hook 2, a portion of the load chain adjacent the dead end link is free to hang downwardly so that the chain for a considerable distance below the post ordinarily assumes a substantially vertical position and is of sufficient weight to maintain the end link in a similar position thus preventing its accidental detachment from the post. However, when it is desired to detach the chain from the hoist it is only necessary to lift the chain slightly and turn the end link to a substantially horizontal position to enable it to be readily drawn outwardly away from the base of the post and passed over the head so as to free it entirely from the former.

It will thus be observed that the chain may be attached to or detached from the hoist with the utmost facility and that when positioned upon the post it is impossible for the chain to become accidentally detached therefrom under operative conditions and further, that by reason of the peculiar form and arrangement of the post and the surface adjacent the base thereof a considerable portion of the weight of the chain is sustained by the latter and the post correspondingly relieved, thus enhancing the strength of the post without increasing its bulk beyond the limits permitted by the size of the chain link. Moreover, as the post is preferably formed by casting, die-forging or the like as an integral part of the load chain guide or other portion of the hoist selected for the attachment of the dead end of the load chain a strong and rigid construction is afforded and no machining or other costly finishing of the post required.

While I have herein illustrated and described with considerable particularity a preferred embodiment of my invention in combination with a chain hoist of well known form, I do not thereby desire or intend to limit myself specifically to the precise details of construction and arrangement which I have disclosed, as the same may be modified in minor particulars if desired and the invention employed with other forms of chain hoists without departing from the spirit and scope of the invention as defined by the appended claims.

Having thus described my invention I claim and desire to protect by Letters Patent of the United States:

1. In a chain hoist embodying a load chain, means for securing and supporting the dead end of said chain comprising a post projecting from one of the component parts of the hoist, said post having a head extending laterally and everhanging the post in one direction and of a size and contour to enable the end link of the chain to be passed thereover when turned substantially at right angles to the axis of the main portion of the chain and to overhang a portion of the link and retain the same in position on the post when the link is turned to normal position parallel with said axis the surface of the part from which the post projects being disposed to occupy an angular position with respect to the body of the chain to receive and afford support to the face of said end link when disposed on the post.

2. In a chain hoist embodying a load chain and a load chain guide, means for securing and supporting the dead end of the load chain and comprising a post integral with and projecting from the face of the guide, having a head of generally elliptical planar form, extending laterally beyond the post in one direction, spaced from the surface of the guide and of a size and contour to enable the end link of the chain to be passed thereover when turned substantially transversely to the general direction in which the chain extends under operative conditions, said post being grooved transversely on its upper surface adjacent its base to form a seat for the link when disposed thereon and substantially aligned with the body of the chain, the surface of the load chain guide adjacent the base of the post being disposed to occupy an angular position with respect to the body of the chain to receive and afford support to the face of the link when disposed on the post.

In witness whereof, I have hereunto set my hand this 7th day of February, 1925.

PETER MULLEN.