US012240294B2

(12) **United States Patent**
Johansen et al.

(10) **Patent No.: US 12,240,294 B2**
(45) **Date of Patent: Mar. 4, 2025**

(54) **FLUID DISTRIBUTION DEVICE**

(71) Applicant: **GENTHERM GMBH**, Odelzhausen (DE)

(72) Inventors: **Thomas Johansen**, Kirchseeon (DE); **Dan Botez**, Augsburg (DE); **Jeffery Steven Arsenault**, Plymouth, MI (US)

(73) Assignee: **GENTHERM GMBH**, Odelzhausen (DE)

(*) Notice: Subject to any disclaimer, the term of this patent is extended or adjusted under 35 U.S.C. 154(b) by 394 days.

(21) Appl. No.: **17/617,987**

(22) PCT Filed: **Jul. 8, 2020**

(86) PCT No.: **PCT/DE2020/000151**
§ 371 (c)(1),
(2) Date: **Dec. 10, 2021**

(87) PCT Pub. No.: **WO2021/004565**
PCT Pub. Date: **Jan. 14, 2021**

(65) **Prior Publication Data**

US 2022/0305880 A1 Sep. 29, 2022

(30) **Foreign Application Priority Data**

Jul. 8, 2019 (DE) 10 2019 004 683.8

(51) **Int. Cl.**
B60H 1/00 (2006.01)

(52) **U.S. Cl.**
CPC ***B60H 1/00685*** (2013.01); ***B60H 1/00285*** (2013.01); *B60H 2001/003* (2013.01)

(58) **Field of Classification Search**
CPC B60H 1/00685; B60H 1/00285; B60H 2001/003
USPC 454/120
See application file for complete search history.

(56) **References Cited**

U.S. PATENT DOCUMENTS

3,190,584	A	6/1965	Gire et al.	
10,330,208	B2 *	6/2019	Takamatsu	F16K 27/06
2017/0254425	A1	9/2017	Takamatsu et al.	
2018/0361894	A1 *	12/2018	Wolf	B60N 2/5657
2019/0054793	A1	2/2019	Fujii et al.	

FOREIGN PATENT DOCUMENTS

DE	4447135	A1 *	7/1995	B60H 1/00685
DE	102008025059	A1	12/2008	
DE	102009004157	B3	4/2010	
DE	102009032599	A1 *	1/2011	B60H 1/00685
DE	102010037148	A1	3/2012	
DE	102017205135	A1	9/2018	

(Continued)

OTHER PUBLICATIONS

International Search Report and Written Opinion mailed on Nov. 2, 2020, for International Application PCT/DE2020/000151.

Primary Examiner — Allen R. B. Schult
(74) *Attorney, Agent, or Firm* — The Dobrusin Law Firm, P.C.

(57) **ABSTRACT**

A fluid distribution device that includes a distributor housing having at least one fluid inlet opening and at least one fluid outlet opening; and at least one rotary, elongated hollow element having a wall that has one or more fluid-passage openings, a fluid flow through the distributor housing is changed by rotating the at least one hollow element.

17 Claims, 4 Drawing Sheets

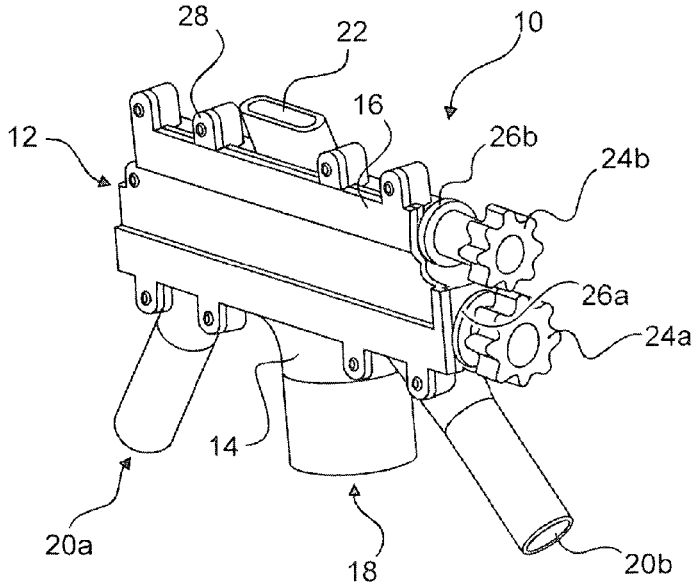

(56) **References Cited**

FOREIGN PATENT DOCUMENTS

EP	2243646	A1	*	10/2010	..... B60H 1/00685
FR	2696382	A1	*	4/1994	..... B60H 1/00685
GB	2324600	A	*	10/1998	..... B60H 1/00064

* cited by examiner

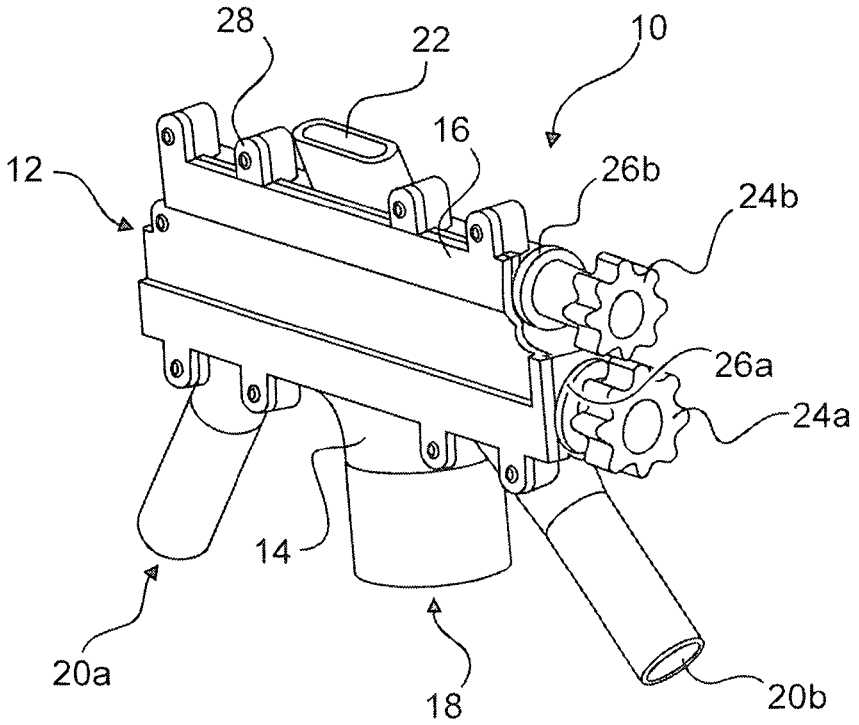
28
22
10
16
12
26b
24b
26a
24a
14
20a
18
20b

Fig. 1

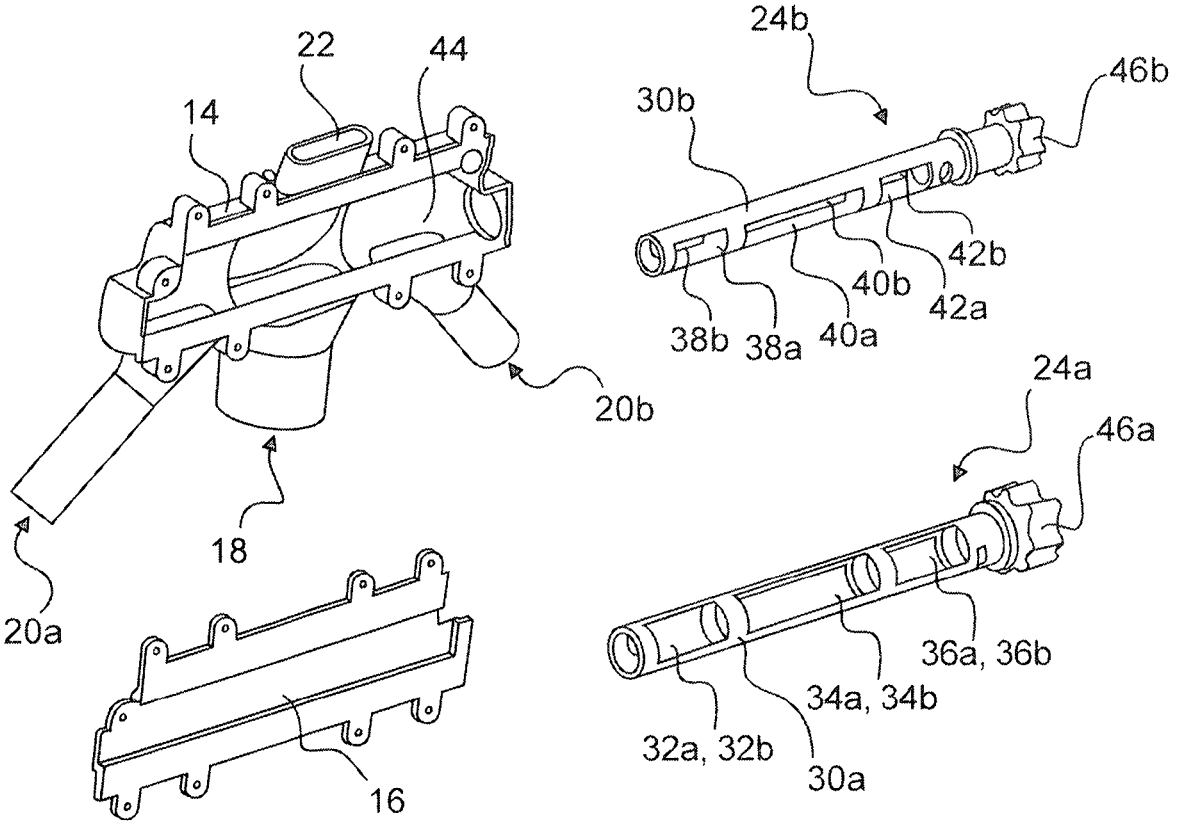
22
44
14
24b
46b
30b
42b
40b
42a
38b
38a
40a
20b
24a
46a
18
20a
36a, 36b
34a, 34b
32a, 32b
30a
16

Fig. 2

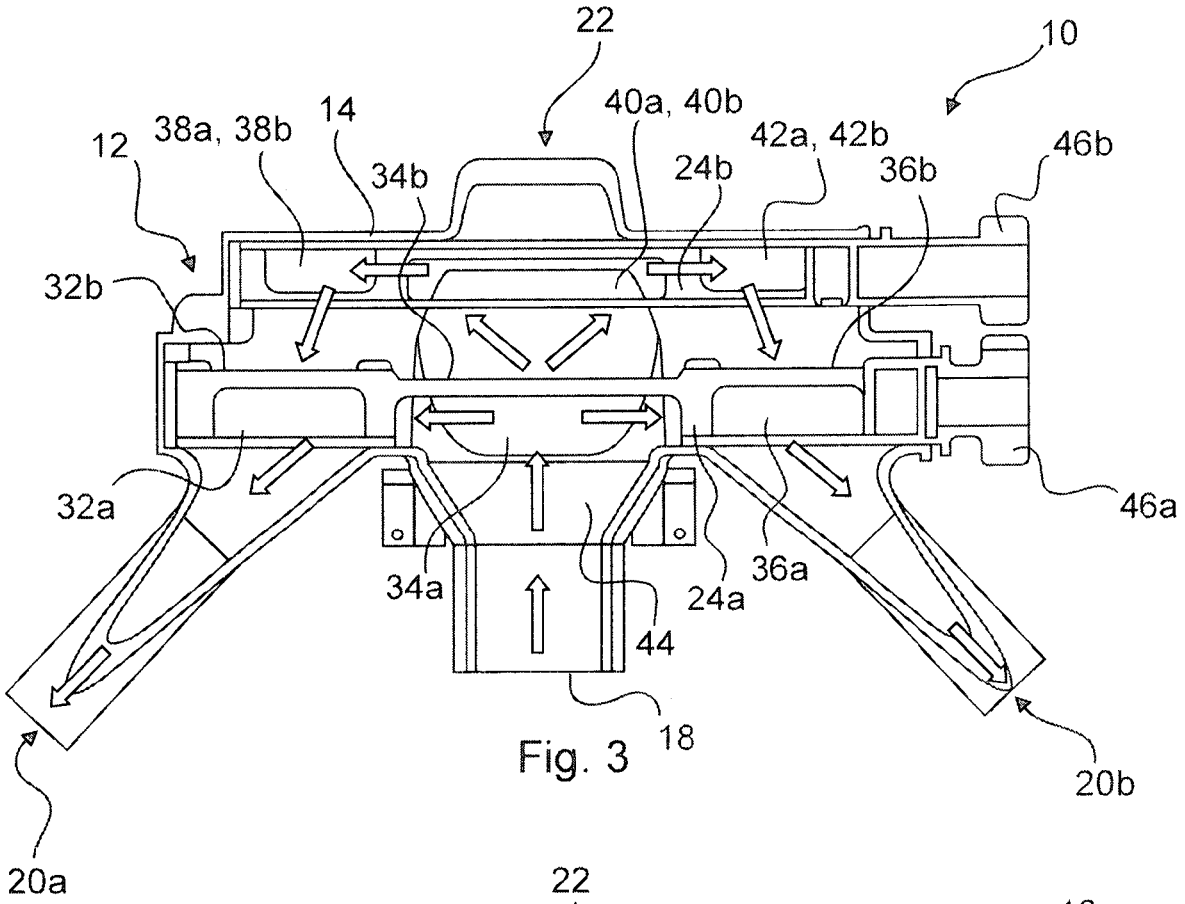
22
10
12
38a, 38b
14
40a, 40b
42a, 42b
46b
34b
24b
36b
32b
32a
46a
34a
24a
36a
44
18
20b
20a

Fig. 3

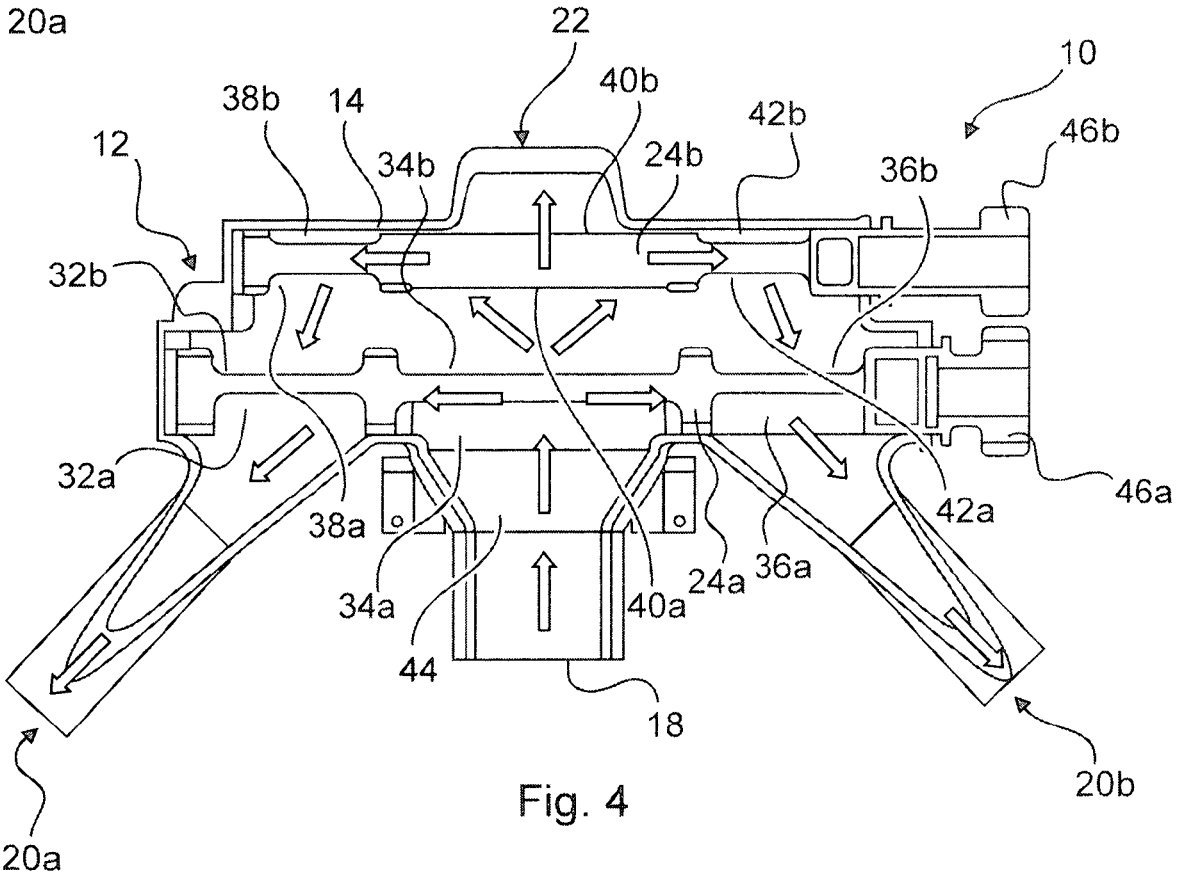
22
10
38b
14
40b
42b
12
34b
24b
36b
46b
32b
32a
38a
42a
46a
34a
40a
24a
36a
44
18
20b
20a

Fig. 4

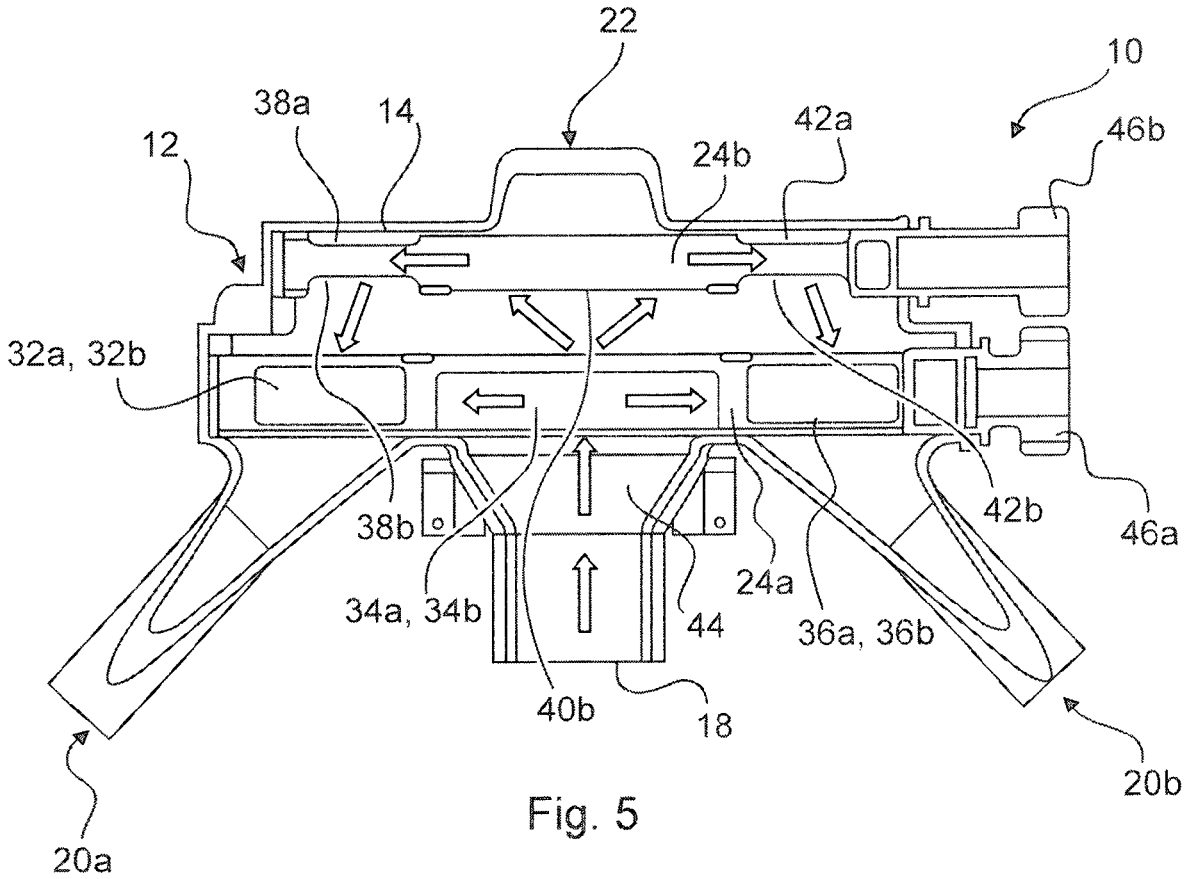
22
10
38a
14
42a
46b
12
24b
32a, 32b
38b
42b
46a
24a
34a, 34b
44
36a, 36b
40b
18
20b
20a

Fig. 5

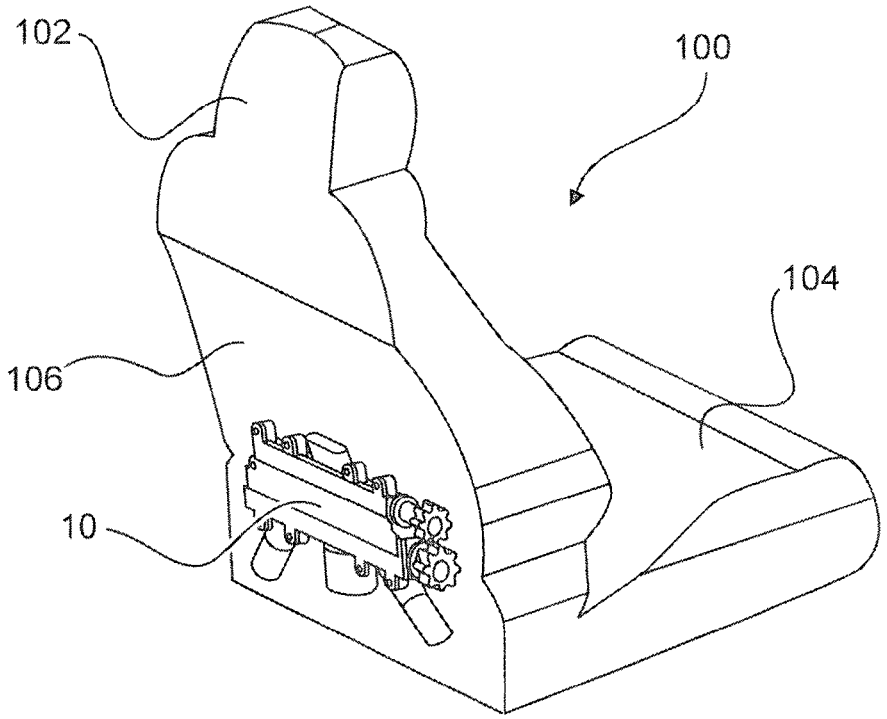
102
100
104
106
10

Fig. 6

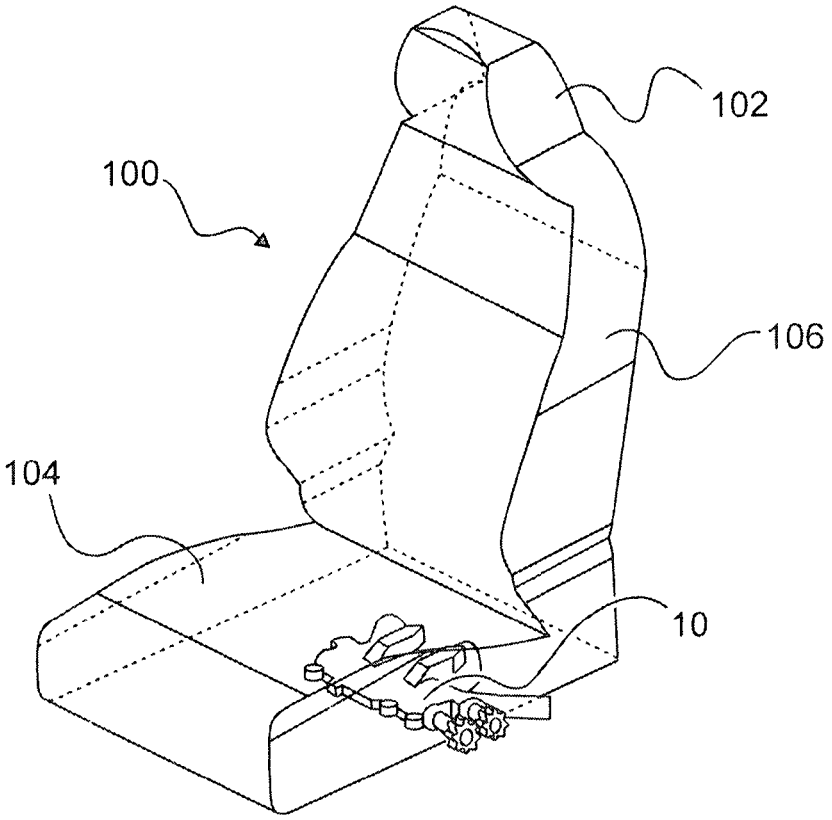

Fig. 7

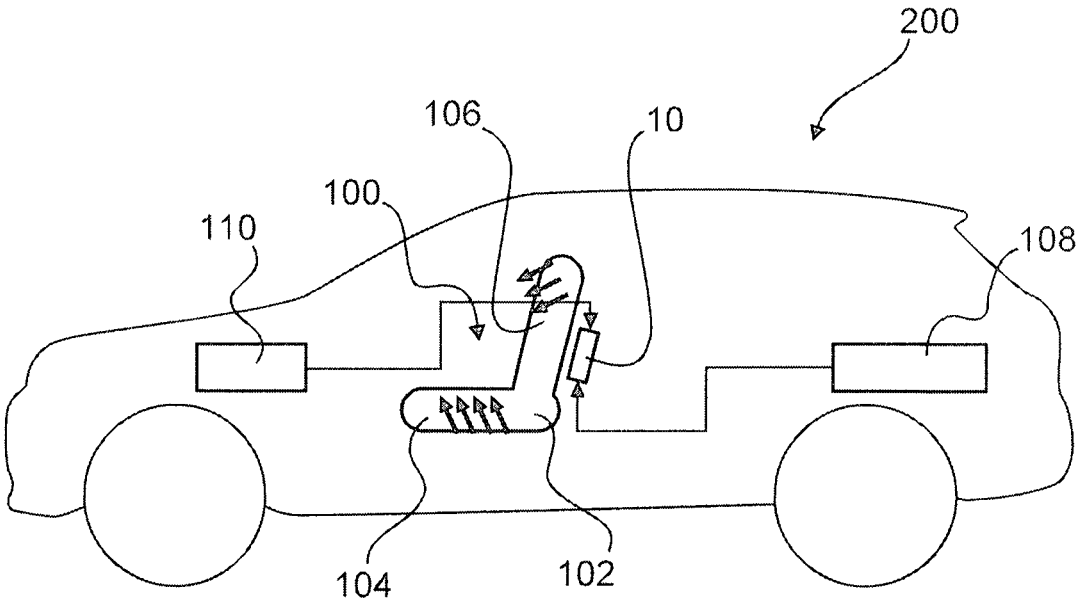

Fig. 8

FLUID DISTRIBUTION DEVICE

CROSS REFERENCE TO RELATED APPLICATIONS

This application is a US National Phase of PCT/DE2020/000151 filed Jul. 8, 2020, which claims priority to DE 10 2019 004 683.8 filed Jul. 8, 2019, both of which are hereby incorporated by reference herein for all purposes.

FIELD

These teachings relate to a fluid distribution device having a distributor housing, the distributor housing having at least one fluid inlet opening and at least one fluid outlet opening; to a seat ventilation system having at least one seat, which has one or more ventilation zones, and a feed device set up to provide an air flow to the one or more ventilation zones of the at least one seat; and to a vehicle having a seat ventilation system.

BACKGROUND

In particular, only a limited amount of installation space is regularly available when using fluid distribution devices in vehicles. Corresponding fluid distribution devices must consequently be designed to save as much space as possible.

However, construction space-saving designs often do not have suitable control options for the fluid flow, so that the use of side designs is ruled out for a large number of areas of application. Known fluid distribution devices also often generate a comparatively high counter pressure, so that comparatively powerful flow generators must be used. This leads to an increase in manufacturing costs and increased energy consumption.

In addition, there is a need for fluid distribution devices which can be controlled or actuated both manually and by motor.

SUMMARY

The object on which the invention is based is thus to reduce the installation space required for the fluid distribution without excessively restricting options for controlling the fluid flow.

The object is achieved by a fluid distribution device of the type mentioned above, the fluid distribution device according to the invention comprising at least one rotary, elongated hollow element, the wall of which has one or more fluid-passage openings, the fluid flow through the distributor housing being variable by rotating the at least one hollow element.

The invention makes use of the knowledge that elongated hollow elements, the walls of which have one or more fluid-passage openings, can be used as rotatable valve cores for changing the fluid flow through a distributor housing. The fluid distribution device can thus be used as a fluid valve, the rotary actuation of the elongated hollow element enabling a compact construction and a flat design, which can also be thermally insulated comparatively well. The at least one hollow element can be rotated manually or by motor, so that the fluid distribution device according to the invention can be used both in a manual control design and in conjunction with a motor control. Manual control in this case can be implemented, for example, via a rotary knob, the rotary knob being connected to the hollow element or being an integral part of the hollow element. Motor control can be implemented, for example, via an electric motor which is connected to the at least one hollow element.

The fluid distribution device according to the invention can be used for distributing gases, gas mixtures and/or liquids. In particular, the fluid distribution device can be used as an air distribution device. The fluid distribution device is preferably set up to be used as an air distribution device for a vehicle seat.

The fluid distribution device according to the invention generates a comparatively low counter pressure during operation and simultaneously allows a high fluid flow rate. Furthermore, turbulence within the distributor housing is prevented or at least considerably reduced. The distributor housing of the fluid distribution device can be designed in one piece or in a plurality of pieces. In particular, the distributor housing has a receiving body in which the at least one hollow element is inserted. The receiving body of the distributor housing can be closed with a housing cover.

In another preferred embodiment of the fluid distribution device according to the invention, the free flow cross-section of the one or more fluid-passage openings of the at least one hollow element available for the fluid flow can be changed by rotating the at least one hollow element. The one or more fluid-passage openings of the at least one hollow element can preferably be rotated into or out of a flow path by rotating the at least one hollow element. The one or more fluid-passage openings of the at least one hollow element can preferably be brought into alignment with a cover by rotating the at least one hollow element, so that the cover reduces the free flow cross-section of the one or more fluid-passage openings of the at least one hollow element. The cover can be formed, for example, by the inner wall of the distributor housing. When there is a plurality of fluid-passage openings, flow division is determined by the free flow cross-section of all fluid-passage openings.

A fluid distribution device is also preferred in which the one or more fluid-passage openings are located in a circumferential outer surface of the at least one hollow element. In addition to the one or more fluid-passage openings in the circumferential outer surface of the at least one hollow element, one or more fluid-passage openings can also be located on the end face of the at least one hollow element. The fluid-passage openings can function as fluid inlet openings through which fluid can flow into the inner region of the hollow element and/or as fluid outlet openings through which fluid can flow out of the inner region of the hollow element.

In addition, a fluid distribution device according to the invention is preferred in which the at least one fluid outlet opening of the distributor housing can be shut off by rotating the at least one hollow element. The shutting-off of the at least one fluid outlet opening of the distributor housing prevents a fluid from flowing out of the at least one fluid outlet opening of the distributor housing out of the distributor housing. The at least one fluid inlet opening of the distributor housing can also be shut off by rotating the at least one hollow element. Shutting off the at least one fluid inlet opening of the distributor housing can prevent an inflow of a fluid through the at least one fluid inlet opening of the distributor housing into the distributor housing.

In a further development of the fluid distribution device according to the invention, the at least one hollow element is arranged in sections inside the distributor housing and in sections outside the distributor housing. The section of the at least one hollow element arranged inside the distributor housing has the one or more fluid-passage openings via which the fluid flow through the distributor housing can be

changed. The section of the at least one hollow element arranged outside the distributor housing is preferably used for actuation, in particular for rotary actuation, of the at least one hollow element.

In addition, a fluid distribution device according to the invention which has a rotary actuation device is preferred. The rotary actuation device is preferably arranged at least partially outside of the distributor housing. The at least one hollow element can be rotated via the rotary actuation device. The rotary actuation device can be an integral part of the hollow element or be connected to the hollow element. The rotary actuation device can comprise a rotary handle or a rotary knob.

In a further preferred embodiment, the fluid distribution device according to the invention has a first rotary, elongated hollow element and a second rotary, elongated hollow element. The walls of the first hollow element and the second hollow element each have one or more fluid-passage openings, the fluid flow through the distributor housing being able to be changed by rotating the hollow element. The at least one fluid outlet opening of the distributor housing can be shut off by rotating the hollow element. The at least one fluid inlet opening of the distributor housing can be shut off by rotating the hollow element. The first hollow element and the second hollow element preferably run parallel to one another.

In a further development of the fluid distribution device according to the invention, the distributor housing has at least one first fluid outlet opening and at least one second fluid outlet opening, the fluid flow through the at least one first fluid outlet opening and the fluid flow through the at least one second fluid outlet opening being individually controllable by rotating the hollow elements. The fluid flow through the at least one first fluid outlet opening of the distributor housing can be controllable by rotating the first hollow element. The fluid flow through the at least one second fluid outlet opening of the distributor housing can be controllable by rotating the second hollow element. Different fluid flows can be tapped at the fluid distribution device in this way. A needs-based supply of fluid for different consumers or fluid receivers can be implemented in this way. Furthermore, excess fluid, for example, air, can also be discharged from the distributor housing through a fluid outlet opening of the distributor housing, so that the counter pressure is reduced and the vibrations and noises generated by the fluid distributor device are reduced.

In another embodiment of the fluid distribution device according to the invention, the at least one first fluid outlet opening of the distributor housing and the at least one second fluid outlet opening of the distributor housing can be shut off simultaneously and/or individually by rotating the hollow elements. The at least one first fluid outlet opening of the distributor housing can be shut off by the first hollow element in a rotational angle position of the first hollow element. The at least one second fluid outlet opening of the distributor housing can be shut off by the second hollow element in a rotational angle position of the second hollow element. With regard to the control of the fluid distribution device, an option is thus created whereby fluid can be provided only for individual consumers or fluid receivers connected to the fluid distribution device or for all consumers or fluid receivers connected to the fluid distribution device. If the fluid distribution device is used in a seat ventilation system, for example, only individual or all ventilation zones of a seat can be supplied with an air flow. Blocking all of the fluid outlet openings in the distributor housing can also completely interrupt the fluid flow to the consumers or fluid receivers.

The fluid distribution device according to the invention is further advantageously developed in that the walls of the at least one hollow element have a plurality of axially spaced fluid-passage openings. The fluid-passage openings are preferably designed as wall windows of the hollow element. The at least one hollow element can be designed, for example, as a plastic part, in particular as a plastic injection-molded part. Furthermore, the distributor housing can be made of plastic in sections or entirely. The distributor housing preferably serves as a radial and/or axial bearing for the at least one hollow element. In particular, the at least one hollow element can be removed from the distributor housing in a non-destructive manner.

In a further preferred embodiment of the fluid distribution device according to the invention, the walls of the at least one hollow element have a pair or a plurality of pairs of opposite fluid-passage openings. The at least one hollow element preferably has a plurality of, for example, two, three, four or more than four axially spaced pairs of opposite fluid-passage openings. A material web extending in the circumferential direction is preferably located between axially spaced fluid-passage openings.

In addition, a fluid distribution device according to the invention is advantageous when it has at least one actuator, the at least one hollow element being rotatable by means of the at least one actuator. The actuator can be an electric, pneumatic or hydraulic actuator. The actuator is preferably an electric motor, in particular a stepper motor. The at least one hollow element can be rotated step by step or continuously using the actuator. The fluid distribution device preferably comprises one actuator per hollow element. In particular, the fluid distribution device has a control device by means of which the at least one actuator can be controlled. For example, the at least one actuator can be controlled by the control device as a function of the ambient temperature. Alternatively, or additionally, the control device can be set up to control the at least one actuator as a function of a set target temperature and/or a set ventilation intensity. The control device and the at least one actuator can be connected to one another via a bus system, in particular in a LIN bus system.

The object on which the invention is based is further achieved by a seat ventilation system of the type mentioned above, the feed device of the seat ventilation system according to the invention having a fluid distribution device according to any one of the embodiments described above. With regard to the advantages and modifications of the seat ventilation system according to the invention, reference is first made to the advantages and modifications of the fluid distribution device according to the invention.

The seat ventilation system can furthermore have a flow generator which is set up to generate the fluid flow fed to the fluid distribution device. The flow generator can be arranged at a distance from the distribution device. Alternatively, the flow generator can also be arranged directly on the fluid distribution device or in the fluid distribution device. The flow generator can be a fan. The air provided to the one or more ventilation zones via the feed device can be, for example, ambient air or pre-conditioned air. If the seat ventilation system is used in a vehicle, the ambient air can be air from the vehicle interior or air from the vehicle environment. The pre-conditioned air can be pre-tempered, that is, heated or cooled air. Furthermore, the pre-conditioned air can also have a reduced or increased air humidity.

In particular, the seat ventilation system has a temperature control device by means of which the air flow provided to the one or more ventilation zones is pre-tempered. The temperature control device can be a heating and/or cooling device. For example, the temperature control device can comprise one or more thermoelectric devices, for example, Peltier elements. The distribution device can also be connected in a fluid-conducting manner to ventilation zones of a plurality of seats. The air distribution to a plurality of seats, for example, to the driver's seat and the front passenger seat of a vehicle, can thus be implemented via just one fluid distribution device.

In a further preferred embodiment of the seat ventilation system according to the invention, the fluid distribution device is arranged and/or fastened in or on a cushion body of the at least one seat. For example, the fluid distribution device is arranged in the backrest or on the back side of the backrest. Alternatively, the fluid distribution device can also be arranged in the seat cushion or below the seat cushion of the seat.

The object on which the invention is based is further achieved by a vehicle of the type mentioned above, the seat ventilation system of the vehicle according to the invention having a fluid distribution device according to any one of the embodiments described above or the seat ventilation system being designed according to any one of the embodiments described above.

BRIEF DESCRIPTION OF THE DRAWINGS

Preferred embodiments of the invention are explained and described in more detail below with reference to the accompanying drawings. Shown are:

FIG. **1** an embodiment of the fluid distribution device according to the invention in a perspective illustration;

FIG. **2** an embodiment of the fluid distribution device according to the invention in an exploded illustration;

FIG. **3** an embodiment of the fluid distribution device according to the invention in a first state in a sectional illustration;

FIG. **4** the fluid distribution device depicted in FIG. **3** in a second state in a sectional illustration;

FIG. **5** the fluid distribution device depicted in FIG. **3** in a third state in a sectional illustration;

FIG. **6** an embodiment of the seat ventilation system according to the invention in a perspective illustration;

FIG. **7** a further embodiment of the seat ventilation system according to the invention in a perspective illustration; and

FIG. **8** an embodiment of the vehicle according to the invention in a schematic illustration.

DETAILED DESCRIPTION

FIG. **1** shows a fluid distribution device **10** which can be used for dividing and controlling a fluid flow. The fluid distribution device **10** comprises a two-part distributor housing **12** made of plastic. The distributor housing **12** comprises a receiving body **14**, the receiving body **14** being closed by means of fastening elements **28** with a housing cover **16**. The fastening elements **28** can, for example, be screws, pins, or rivets.

The distributor housing **12** has a fluid inlet opening **18** and a total of 3 fluid outlet openings **20***a*, **20***b*, **22**. The fluid outlet openings **20***a*, **20***b* are arranged on the same side of the distributor housing **12** as the fluid inlet opening **18**, the fluid inlet opening **18** being positioned between the fluid outlet openings **20***a*, **20***b*. The fluid outlet opening **22** is arranged on the side opposite to the fluid inlet opening **18**. The fluid flowing into the distributor housing **12** through the fluid inlet opening **18** is divided among the fluid outlet openings **20***a*, **20***b*, **22** depending on the state of the fluid distribution device **10**.

Two rotary, elongated hollow elements **24***a*, **24***b* are inserted into the distributor housing **12**, the walls **30***a*, **30***b* of which have a plurality of fluid-passage openings **32***a*, **32***b*, **34***a*, **34***b*, **36***a*, **36***b*, **38***a*, **38***b*, **40***a*, **40***b*, **42***a*, **42***b*, a rotation the hollow element **24***a*, **24***b* being able to change the fluid flow through the distributor housing **12**. Rotating the hollow elements **24***a*, **24***b* can shut off the fluid outlet openings **20***a*, **20***b*, **22** simultaneously and/or individually. The hollow elements **24***a*, **24***b* are arranged in sections inside the distributor housing **12** and in sections outside of the distributor housing **12**. The receiving body **14** of the distributor housing **12** has recesses for the hollow elements **24***a*, **24***b*, through which recesses the hollow elements **24***a*, **24***b* are inserted into the distributor housing **12**. To seal the housing interior **44** of the distributor housing **12**, seals **26***a*, **26***b*, which are designed as O-rings, are arranged between the hollow elements **24***a*, **24***b* and the receiving body **14**.

The exploded illustration of FIG. **2** shows that the fluid-passage openings **32***a*, **32***b*, **34***a*, **34***b*, **36***a*, **36***b*, **38***a*, **38***b*, **40***a*, **40***b*, **42***a*, **42***b* are located in circumferential outer surfaces of the hollow elements **24***a*, **24***b*. In addition, the hollow elements **24***a*, **24***b* have a fluid-passage opening on the end face.

The wall **30***a* of the hollow element **24***a* has three pairs of opposite fluid-passage openings **32***a*, **32***b*, **34***a*, **34***b*, **36***a*, **36***b*. The pairs of opposite fluid-passage openings **32***a*, **32***b*, **34***a*, **34***b*, **36***a*, **36***b* are arranged axially spaced from one another. The wall **30***b* of the hollow element **24***b* also has three pairs of opposite fluid-passage openings **38***a*, **38***b*, **40***a*, **40***b*, **42***a*, **42***b*, the pairs of opposite fluid-passage openings **38***a*, **38***b*, **40***a*, **40***b*, **42***a*, **42***b* also being axially spaced from one another.

The hollow elements **24***a*, **24***b* each have a rotary actuation device **46***a*, **46***b*, the rotary actuation device **46***a*, **46***b* being designed as a rotary handle and being arranged outside of the distributor housing **12**. The hollow elements **24***a*, **24***b* can be rotated manually via the rotary actuation devices **46***a*, **46***b*. Furthermore, the rotary actuation devices **46***a*, **46***b* can each be connected to an actuator, for example, an electric motor, so that the hollow elements **24***a*, **24***b* can be rotated via the actuator.

The housing interior **44** of the distributor housing **12** connects the fluid inlet opening **18** to the fluid outlet openings **20***a*, **20***b*, **22** in a fluid-conducting manner when the hollow elements **24***a*, **24***b* are not used. The hollow elements **24***a*, **24***b* thus function as rotary valve cores, via which the fluid outflow through the fluid outlet openings **20***a*, **20***b* and the fluid outlet opening **22** can be controlled and shut off. The free flow cross-section of the fluid-passage openings **32***a*, **32***b*, **34***a*, **34***b*, **36***a*, **36***b*, **38***a*, **38***b*, **40***a*, **40***b*, **42***a*, **42***b* of the hollow elements **24***a*, **24***b* available for the fluid flow can be changed by rotating the hollow elements **24***a*, **24***b*. The fluid-passage openings **32***a*, **32***b*, **34***a*, **34***b*, **36***a*, **36***b*, **38***a*, **38***b*, **40***a*, **40***b*, **42***a*, **42***b* can be rotated into or out of a flow path by rotating the hollow elements **24***a*, **24***b* and/or can be brought in alignment with the inner wall of the distributor housing **12**.

FIGS. **3** to **5** show that the first elongated hollow element **24***a* and the second elongated hollow element **24***b* run parallel to one another. The two first fluid outlet openings **20***a*, **20***b* are arranged on a first side of the hollow elements **24***a*, **24***b*. The second fluid outlet opening **22** is arranged on

a second opposite side of the hollow elements **24***a*, **24***b*. The fluid flow through the two first fluid outlet openings **20***a*, **20***b* and the fluid flow through the second fluid outlet openings **22** can be controlled by rotating the hollow elements **24***a*, **24***b*. The fluid flow through the two first fluid outlet openings **20***a*, **20***b* can be interrupted by rotating the first hollow element **24***a*. The fluid flow through the second fluid outlet opening **22** can be interrupted by rotating the second hollow element **24***b*.

FIG. **3** shows a state of the fluid distribution device **10** in which an angle of rotation is set on the second hollow element **24***b*, which angle leads to the second hollow element **24***b* shutting off the second fluid outlet opening **22**. A fluid introduced into the distributor housing **12** flows through the fluid inlet opening **18** into the housing interior **44** of the distributor housing **12**. The fluid flowing in passes through the fluid-passage opening **34***a* into the interior of the hollow element **24***a*. The fluid flowing into the interior of the hollow element **24***a* is partially deflected laterally and partially leaves the interior of the hollow element **24***a* through the fluid-passage opening **34***b*. The fluid flowing through the fluid-passage opening **34***b* then reaches the interior of the hollow element **24***b* via the fluid-passage openings **40***a*, **40***b* of the hollow element **24***b*. Since no open flow path is released in the direction of the fluid outlet opening **22**, the fluid flowing into the interior of the hollow element **24***b* is entirely deflected laterally. The laterally deflected fluid then leaves the interior of the hollow element **24***b* via the fluid-passage openings **38***a*, **38***b* and via the fluid-passage openings **42***a*, **42***b* and is subsequently introduced back into the interior of the hollow element **24***a* via the fluid-passage openings **32***b*, **36***b*. From there, the fluid reaches the fluid outlet openings **20***a*, **20***b* via the fluid-passage openings **32***a*, **36***a*, through which fluid-passage openings **32***a*, **36***a* the fluid then leaves the distributor housing **12**.

The hollow elements **24***a*, **24***b* have different rotational angle positions in the state illustrated in FIG. **4**. A flow path from the interior of the hollow element **24***b* in the direction of the fluid outlet opening **22** is now released due to the different rotational angle positions. In addition, flow paths are released between the interior of the hollow element **24***a* and the fluid outlet openings **20***a*, **20***b*. The fluid flowing in via the fluid inlet opening **18** thus leaves the distributor housing **12** both via the two first fluid outlet openings **20***a*, **20***b* and via the second fluid outlet opening **22**.

In the state illustrated in FIG. **5**, the first hollow element **24***a* has a rotational angle position in which the two first fluid outlet openings **20***a*, **20***b* are shut off by the first hollow element **24***a*. Furthermore, the second hollow element **24***b* has a rotational angle position in which the second fluid outlet opening **22** is shut off by the second hollow element **24***b*. The rotational angle positions of the hollow elements **24***a*, **24***b* thus cause a flow interruption in which fluid does not flow out of any of the fluid outlet openings **20***a*, **20***b*, **22**.

FIG. **6** shows a seat ventilation system **100** having a vehicle seat **102** which can have one or more ventilation zones. The seat ventilation system **100** further comprises a feed device via which an air flow can be provided to the one or more ventilation zones of the vehicle seat **102**. The feed device comprises a fluid distribution device **10**, the fluid distribution device **10** being arranged in a cushion body **106**, namely in the backrest of the vehicle seat **102**.

FIG. **7** also shows a seat ventilation system **100** having a vehicle seat **102**. In the embodiment illustrated, the fluid distribution device **10** of the feed device is arranged below a cushion body **104**, namely below the seat cushion, of the vehicle seat **102**.

FIG. **8** shows a vehicle **200** having a seat ventilation system **100**. The seat ventilation system **100** comprises a vehicle seat **102**, the vehicle seat **102** having two cushion bodies **104**, **106**. The cushion body **104** is a seat cushion. The cushion body **106** is a backrest. A ventilation zone is located in each of the cushion bodies **104**, **106**, via which ventilation zone the seat surface can be ventilated.

The seat ventilation system **100** comprises a flow generator **108** designed as a fan, which flow generator **108** is arranged at a distance from a fluid distribution device **10** of the seat ventilation system **100**. The fluid distribution device **10** has two actuating drives, not shown, via which two hollow elements **24***a*, **24***b* of the fluid distribution device **10** can be rotated. The actuators are designed as stepper motors. The actuators are connected to a control device **110** which controls the actuators as a function of the ambient temperature and/or a set target temperature. For example, the control device **110** and the actuators of the fluid distribution device **10** are connected to one another via a bus system, in particular a LIN bus system. The seat ventilation system **100** illustrated can furthermore have a temperature control device, by means of which the air flow provided to the ventilation zones can be pre-tempered. For example, the temperature control device allows the air flow to be heated and/or cooled so that a cooling and/or heating function can be implemented.

REFERENCE NUMBER

10 fluid distribution device
12 distributor housing
14 receiving body
16 housing cover
18 fluid inlet opening
20*a*, **20***b* fluid outlet openings
22 fluid outlet opening
24*a*, **24***b* hollow elements
26*a*, **26***b* seals
28 fastening elements
30*a*, **30***b* walls
32*a*, **32***b* fluid-passage openings
34*a*, **34***b* fluid-passage openings
36*a*, **36***b* fluid-passage openings
38*a*, **38***b* fluid-passage openings
40*a*, **40***b* fluid-passage openings
42*a*, **42***b* fluid-passage openings
44 housing interior
46*a*, **46***b* rotary actuation device
100 seat ventilation system
102 seat
104 cushion body
106 cushion body
108 flow generator
110 control devices
200 vehicle

The invention claimed is:

1. A fluid distribution device comprising:

a distributor housing having at least one fluid inlet opening and at least one fluid outlet opening; and

at least one rotary, elongated hollow element having a wall that has one or more fluid-passage openings, wherein a fluid flow through the distributor housing is changed by rotating the at least one rotary, elongated hollow element, wherein the at least one rotary, elongated hollow element has a length that extends along its longitudinal axis, and wherein the wall of the at least

one rotary, elongated hollow element has a plurality of axially spaced fluid-passage openings;

wherein the at least one rotary, elongated hollow element includes a first rotary, elongated hollow element and a second rotary, elongated hollow element, each having a wall that includes one or more of the one or more fluid-passage openings, wherein the fluid flow through the distributor housing can be changed by rotating the first, rotary elongated hollow element and the second rotary, elongated hollow element; and

wherein the distributor housing has at least one first fluid outlet opening and at least one second fluid outlet opening, wherein the fluid flow through the at least one first fluid outlet opening and the fluid flow through the at least one second fluid outlet opening can be individually controlled by rotating the first, rotary elongated hollow element and the second rotary, elongated hollow element

wherein in one operating condition, the fluid flow is configured to:

enter the distributor housing through the at least one fluid inlet opening;

enter the first rotary, elongated hollow element;

enter the second rotary, elongated hollow element;

be redirected in opposing lateral directions;

be redirected to re-enter the first rotary, elongated hollow element; and

exit the distributor housing through the at least one first fluid outlet opening.

2. The fluid distribution device according to claim **1**, wherein a free flow cross-section of the one or more fluid-passage openings can be changed by rotating the at least one rotary, elongated hollow element.

3. The fluid distribution device according to claim **1**, wherein the one or more fluid-passage openings are located in a circumferential outer surface of the at least one rotary, elongated hollow element.

4. The fluid distribution device according to claim **1**, wherein the at least one fluid outlet opening can be shut off by rotating the at least one rotary, elongated hollow element.

5. The fluid distribution device according to claim **1**, wherein the at least one rotary, elongated hollow element is arranged in sections inside of the distributor housing and in sections outside of the distributor housing.

6. The fluid distribution device according to claim **1**, wherein the fluid distribution device includes a rotary actuation device, which is arranged at least partially outside of the distributor housing and via which the at least one rotary, elongated hollow element can be rotated.

7. The fluid distribution device according to claim **1**, wherein the at least one first fluid outlet opening and the at least one second fluid outlet opening can be shut off simultaneously and/or individually by rotating the first, rotary elongated hollow element and the second rotary, elongated hollow element.

8. The fluid distribution device according to claim **1**, wherein the wall of the at least one rotary, elongated hollow element has a pair or a plurality of pairs of opposite fluid-passage openings.

9. The fluid distribution device according to claim **1**, wherein the fluid distribution device includes at least one actuator, for rotating the at least one rotary, elongated hollow element.

10. The fluid distribution device according to claim **1**, wherein at least two of the plurality of axially spaced fluid-passage openings have different lengths.

11. The fluid distribution device according to claim **1**, wherein at least two of the plurality of axially spaced fluid-passage openings have substantially equal lengths.

12. The fluid distribution device according to claim **6**, wherein the rotary actuation device is rotated manually.

13. The fluid distribution device according to claim **1**, wherein in one operating condition, the fluid flow is configured to:

enter the distributor housing through the at least one fluid inlet opening;

enter the first rotary, elongated hollow element;

be redirected in opposing lateral directions; and

exit the distributor housing through the at least one first fluid outlet opening.

14. The fluid distribution device according to claim **1**, wherein in one operating condition, the fluid flow is configured to:

enter the distributor housing through the at least one fluid inlet opening;

enter the first rotary, elongated hollow element;

enter the second rotary, elongated hollow element;

exit the distributor housing through the at least one second fluid outlet opening.

15. A seat ventilation system, having:

at least one seat, which has one or more ventilation zones; and

a feed device to provide the one or more ventilation zones of the at least one seat with an air flow;

wherein the feed device has the fluid distribution device according to claim **1**.

16. The seat ventilation system according to claim **15**, wherein the fluid distribution device is arranged and/or fastened in or on a cushion body of the at least one seat.

17. A vehicle, having the seat ventilation system according to claim **15**.

* * * * *