March 9, 1965 R. C. L. JACOBS 3,172,343

TREADWAY AND METHOD OF FORMING

Filed March 12, 1962 2 Sheets-Sheet 1

FIG. 1

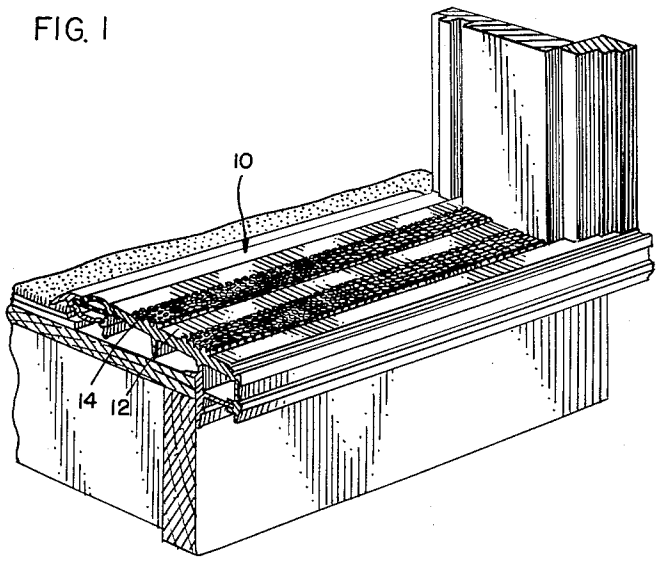

FIG. 2

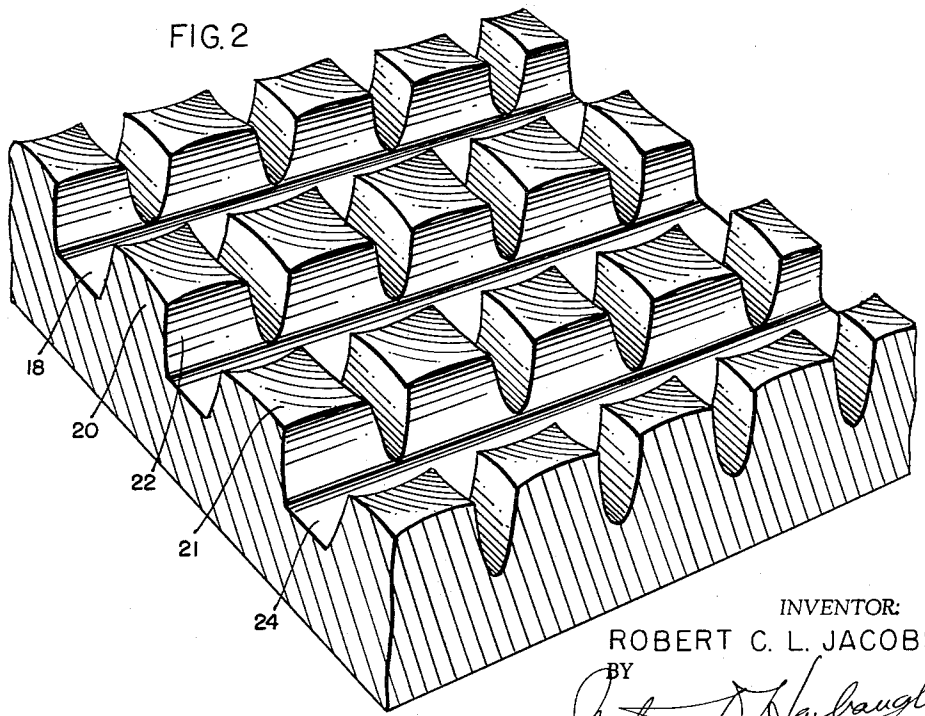

INVENTOR:
ROBERT C. L. JACOBS
BY
Robert W. Vaughan
ATT'Y

March 9, 1965 R. C. L. JACOBS 3,172,343

TREADWAY AND METHOD OF FORMING

Filed March 12, 1962 2 Sheets-Sheet 2

FIG. 3

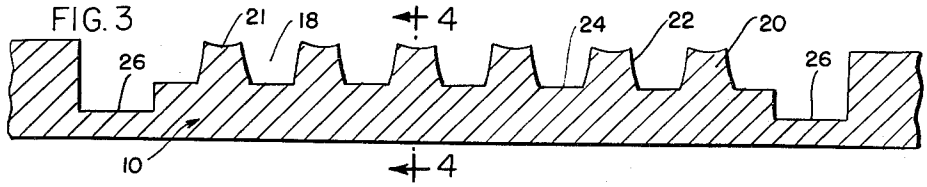

FIG. 4

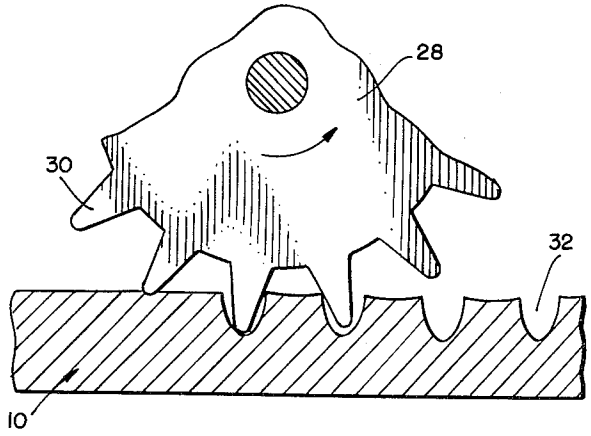

FIG. 5

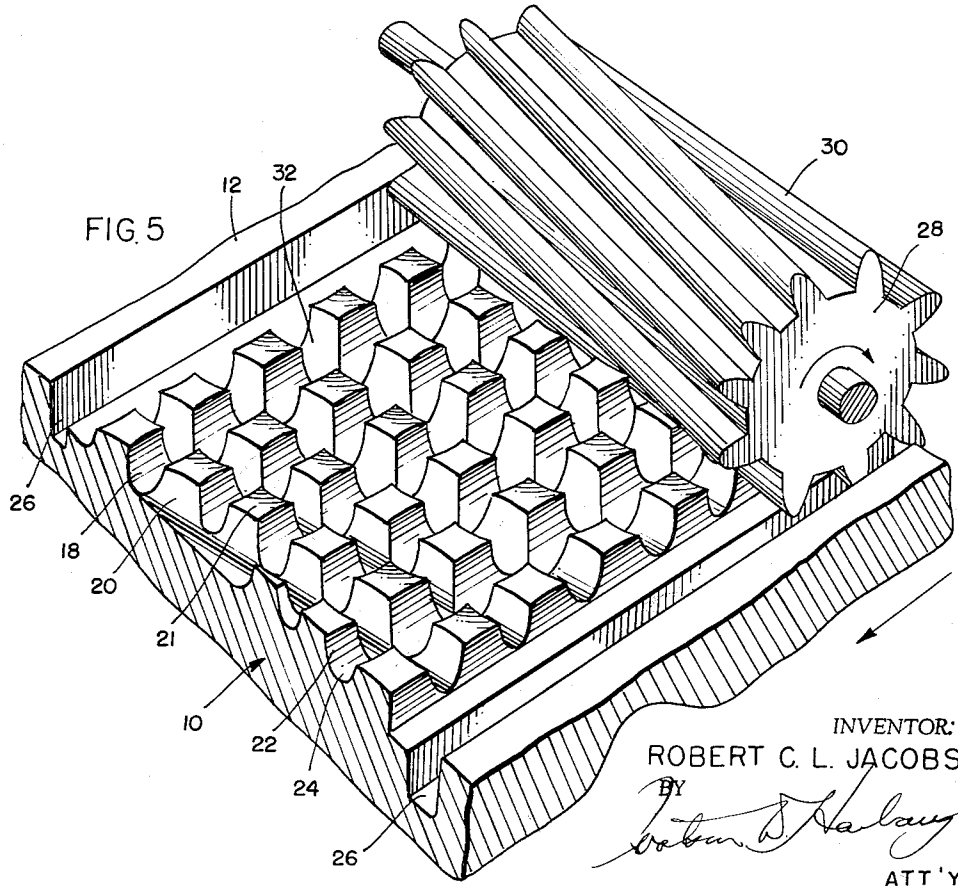

INVENTOR:
ROBERT C. L. JACOBS
BY
Graham S. Haslam
ATT'Y

United States Patent Office 3,172,343
Patented Mar. 9, 1965

3,172,343

TREADWAY AND METHOD OF FORMING

Robert C. L. Jacobs, Peoria, Ill., assignor to Wahlfeld Mfg. Company, Peoria, Ill., a corporation of Illinois

Filed Mar. 12, 1962, Ser. No. 179,150
5 Claims. (Cl. 94—5)

This invention relates in general to treads and in particular to an anti-skid treadway and method of forming a treadway integral with an extruded metallic member, for use in areas frequently traversed, to improve the co-efficient of friction between the treadway and a contacting surface to eliminate slippage.

The treadway of this invention finds its greatest utility on thresholds such as shown in application Serial No. 1,500, now Wahlfeld Patent No. 3,079,652, issued March 5, 1963, reference to which is hereby made, stair steps, inclined surfaces and other areas where the possibility of slippage is prevalent and is known to be the cause of a considerable number of accidents and subsequent injury to the body. Further, the treadway of this invention finds use not only where there are slippery floors or surfaces, but in diversified industries such as airlines, passenger trains, bakeries, textile weaving, where slippage might be a bar to safety and efficiency.

The concept of providing additional frictional portions to thresholds, stair steps and other areas for safety purposes is quite old in the art and is frequently found installed in the more modern home, buildings, factories and equipment. The treadway of this invention is directed to improvements over prior treadways of this character and to a novel method of forming the treadway as an integral portion of an extruded metallic member.

Prior surface treadways of this character may be generally classified in two main groups; first, those which use a plurality of parallel grooves formed in the treadway surface transverse to the normal direction of movement of the contacting surface whereby the edges of the grooves will provide a gripping surface or tend to embed in the surface of the sole of the shoe, and secondly, those which utilize an abrasive compound disposed in the treadway surface at spaced intervals to frictionally engage the contacting surface.

The first group referred to, while increasing the frictional contact between the treadway and the contacting surface, becomes extremely hazardous upon the accumulation of any moisture or snow on the treadway or the contacting surface and provides frictional contact only in one direction. The second group referred to, while providing, to some degree, the desired frictional contact between the treadway and the contacting surface in all directions, fails to maintain the desired frictional contact upon an accumulation of ice thereon and the abrasive material frequently becomes dislodged from the treadway surface, ultimately providing a pocked metallic surface which becomes extremely slippery as moisture and ice form. Additionally, the utilization of the abrasive compound appreciably increases the manufacturing cost of the treadway and normally entails considerable subsequent maintenance and replacements.

In recognition of these factors and desired objects, it is the principal object of this invention to provide an improved treadway which eliminates the shortcomings and disadvantages of prior treadways of this character.

A specific object of this invention is to provide an improved anti-slip treadway integrally formed in an extruded metallic member which presents a plurality of truncated pyramids having an upper concaved surface, the bordering edges thereof raised for engagement with a contacting surface.

Another object of this invention is to provide an improved treadway formed from an extruded metallic member having a plurality of spaced apart channels formed therein transverse to the direction of normal surface contact and a plurality of grooves formed therein angularly intersecting the channels.

A further object of this invention is to provide an improved treadway providing a plurality of metallic edges in spaced apart relationship for engagement with the contacting surface to increase frictional contact therewith to prevent slippage and to provide surfaces for scraping off or removal of foreign particles on the contacting surface, if desired.

A further object of this invention is to provide a novel method of forming an improved anti-skid treadway wherein teeth of a rotating gear member are embedded into an extruded metallic member having channels formed therein to form a plurality of grooves angularly disposed to the direction of the channels.

Among the other objects of this invention is the provision of an improved treadway which is readily formed in a contoured extruded metallic member requiring only subsequent cutting to proper size and is extremely rugged in configuration, simple in design and economical to manufacture.

The features of the present invention which are believed to be novel are set forth with particularity in the appended claims. The formation and the method of formation of the invention, together with further objects and advantages thereof, may best be understood by reference to the following description taken in connection with the accompanying drawings, and the several figures of which like reference numbers identify like elements, and in which:

FIG. 1 is a fragmentary, partially sectioned view in front perspective, illustrating the relationship of the treadway of this invention in conjunction with a threshold assembly in a building structure;

FIG. 2 is an enlarged fragmentary sectioned view in front perspective illustrating the contour and relationship of the plurality of truncated pyramids formed by the method of this invention to provide an improved treadway;

FIG. 3 is a sectional view of the treadway portion of an extruded metallic part illustrating the channel formation and the relationship of the truncated pyramids as formed thereon;

FIG. 4 is a fragmentary sectional view illustrating the relationship of the rotary gear member utilized to form a plurality of grooves at right angle to the channels in the extruded metal member as shown in FIG. 3; and

FIG. 5 is a fragmentary view in front perspective of a gear member forming grooves in angular relationship to channels in an extruded metal member.

By way of generalization for a better understanding of the detailed description to follow, the treadway surface of this invention is primarily characterized by the presentation of a plurality of truncated pyramids formed at spaced intervals having the upper surface thereof concaved in configuration whereby the bordering edges will be in a raised position for engagement with a contacting surface to increase co-efficient of friction and prevent slippage.

Another salient feature of this invention is the method of forming a treadway as an integral portion of an extruded metallic member whereby cross grooves are formed at a depth equal to channels in the extruded member in such a manner as to provide a plurality of spaced apart truncated pyramids.

It is to be understood that although the treadway of this invention is described and illustrated in conjunction with a threshold for a doorway, the treadway and the method of formation is applicable in substantially every area where a safety frictional surface is desired.

Referring now to the drawings, particularly to FIGS.

1 and 2, the treadway of this invention is illustrated as a portion of a threshold **10** for a conventional doorway in a home or building. The threshold **10**, preferably formed from an aluminum alloy, provides a forward or outer downwardly sloping surface **12** which is provided with the treadway **14** of this invention. It being readily understood that the treadway portions are formed at predetermined intervals to insure a greater area for surface contact with the foot and that the number and spacing of the treadway portions will vary depending on the overall depth of the surface **12**.

The treadway **14**, as best seen in FIG. 2, is made up of a plurality of truncated pyramids **16**. The threshold **10**, being a unitary piece formed by a conventional extrusion method, provides a series of channels **18** with intermediate lands **20**. Side walls **22**, interconnecting the channels and lands, are preferably contoured and angled outwardly away from the lower surface **24**.

Referring now more specifically to FIG. 3, the contour of the channels **18** and lands **20** are more readily seen with the corner juncture of the side walls **22** and the top wall **21** of the lands **20** being slightly raised to give the top wall **21** a concaved configuration. Recessed channels **26** are provided on both sides of the treadway to provide the necessary clearance for the formation of grooves in the lands **20** as will now be explained.

Referring now briefly to FIG. 4, the metallic member **10**, upon leaving the extrusion forming equipment, is either formed while at the high extrusion temperature level or subsequently cold worked at lower temperatures by a gear member **28**, positioned directly above the extruded member and adjusted to permit spaced apart teeth **30** to engage the lands **20** to a depth equal to the depth of the channels **18**, rotated in timed relationship to the feed of the extruded member. The gear **28** has a width equal to the total width of all the lands of the treadway portions and forms a series of grooves intersecting the channels **18**.

As the rotary gear member **28** engages the lands **20**, the forming action of the teeth **30** as it enters and leaves the lands, forms grooves **32** and builds up the metal adjacent the upper surface of each of the grooves. Thus, the upper surface **21** of the now formed truncated pyramids, has its peripheral edges raised with the upper surface having a concaved configuration.

It being readily understood that by providing the grooves **32** at substantially the same depth as the channels, the possibility of build up of ice and snow or formation of foreign particles is greatly reduced and greatly increases the ease in which the formation of deposits in the channels and grooves may be removed.

Further, it is readily understood to those skilled in the art that the peripheral border of the upper surface of the truncated pyramids actually function as knife edges as pressure of the foot is forced against these knife edges, any possibility of ice formation will be broken permitting the individual edges to actually embed or contact the sole of a shoe.

By providing the groove formation in a manner which angularly intercepts the channels, the upper peripheral border of the truncated pyramids contact the sole of the shoe at various angles eliminating possible subsequent slippage in any direction.

It is further readily understood by those skilled in the art, that the method of forming the preheated metallic member as it leaves the extrusion machinery provides not only the formation of the grooves in angular relationship to the channel, but permits a build up of the peripheral upper edges and work hardens the surfaces which eliminates an additional tempering process

The grooves intersecting the channels are formed to the depth of the channel which in conjunction with the overall downward slope of the threshold permits drainage and facilitates cleaning of the entire threshold. Further, the plurality of grooves and channels forming the pyramids increases the outwardly exposed surface area for heat radiation if heating elements were desired to be positioned adjacent but below the pyramids.

Thus, having described the actual formation of the treadway and the method of forming the treadway by embedding teeth of a gear in a preheated extruded member, the advantages and objects of this invention as set forth above are readily apparent. The plurality of raised peripheral edges of the truncated pyramids provide a positive gripping surface for contact with the foot at all times and is extremely rugged in construction, easily maintained and economical to manufacture.

It will, of course, be understood that various changes may be made in the form, details, arrangement and proportion of the parts without departing from the scope of the invention which consists of the structure shown and described herein as set forth in the appended claims.

What is claimed is:

1. A treadway formed in an extruded metallic member comprising a plurality of channels extending in spaced apart parallel relationship the length of said metallic member, a plurality of grooves angularly intersecting the channels to define in combination with said channels a plurality of upstanding truncated pyramids the upper surfaces of which are concave and are of less depth than the grooves, the intersections between each upper surface and the walls of said grooves defining parallel raised peripheral edges bordering opposite sides of such upper surface and defining with the upper edges of said channels four corners extending above the concave upper surface for contact with an engaging surface to increase the co-efficient of friction therebetween.

2. A treadway formed in an extruded metallic member comprising a plurality of channels extending in spaced apart parallel relationship the length of said metallic member, said channels forming parallel lands therebetween, a plurality of grooves formed in the lands angularly intersecting the channels to define a plurality of truncated pyramids, the upper surface of said pyramids being concave in two directions to a depth less than that of said grooves and having the upper four corners thereof extending above the concave surfaces for contact with an engaging surface to increase the co-efficient of friction therebetween.

3. A treadway formed in an extruded metallic member comprising a plurality of channels extending in spaced apart parallel relationship the length of said metallic member, the side walls of said channels being contoured and angularly diverging from the bottom thereof, said channels forming lands therebetween the upper surfaces of which are concave in configuration and of a depth less than said channels, a plurality of contoured grooves formed in the lands to a depth greater than said upper surfaces and intersecting the channels at right angles to form a plurality of truncated pyramids, the upper surface of each pyramid being concave in two directions and having work hardened upper peripheral edges terminating in four corners extending above the concave surface for contact with an engaging surface to increase the co-efficient of friction therebetween in every direction.

4. A treadway formed in a unitary metallic threshold member comprising a plurality of truncated pyramids integrally formed on the upper surface of said member, the upper faces of said truncated pyramids being concave in two directions, said pyramids being spaced apart in a relationship defining intersecting channels and grooves deeper than the concavity of said concave faces with the upper four corners thereof extending above the concave face for contact with an engaging surface to increase the co-efficient of friction therebetween.

5. A unitary threshold member of extruded metal comprising a downwardly sloping treadway including a plurality of spaced upright truncated pyramidal elements integrally formed on the upper surface of said member with the top faces thereof concave in two directions, the walls of said pyramidal elements defining parallel chan-

nels extending the length of the extruded member crossed by parallel contoured grooves of a depth greater than the depth of the concavity of the top faces and downwardly sloping for drainage from said channels and top faces, the upper peripheral edges of the grooves defining with the margins of each of said top faces four upper corners of built up work hardened metal extending above the concave surface for contact by an engaging surface to increase the co-efficient of friction therebetween.

References Cited by the Examiner

UNITED STATES PATENTS

1,032,740	7/12	Clark	15—238
1,497,916	6/24	Kelley	15—237

2,073,814	3/37	Small	94—11
2,091,157	8/37	Moorman	20—79 X
2,135,815	11/38	Hecht	94—11
2,742,121	4/56	Liskey	94—5 X
2,830,509	4/58	Bustin	94—5
2,872,714	2/59	Odegaard	20—64
2,946,077	7/60	Dyer	15—238
2,976,611	3/61	Giffen	29—553
3,034,212	5/62	Reifers	29—553
3,079,652	3/63	Wahlfeld	20—64
3,093,216	6/63	Dunham	189—34

JACOB L. NACKENOFF, *Primary Examiner.*