July 23, 1935. A. BRADLEY ET AL 2,008,813

GALVANIZING APPARATUS

Filed July 13, 1931

FIG-1

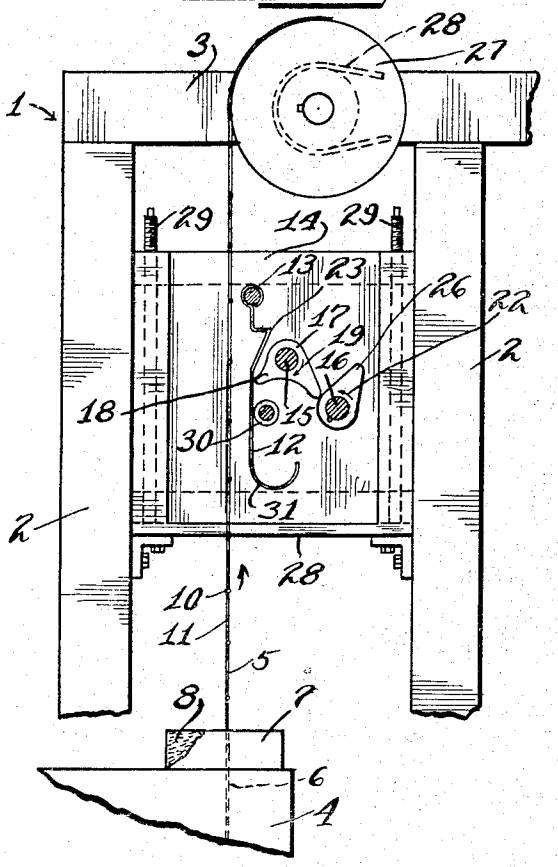

FIG-2

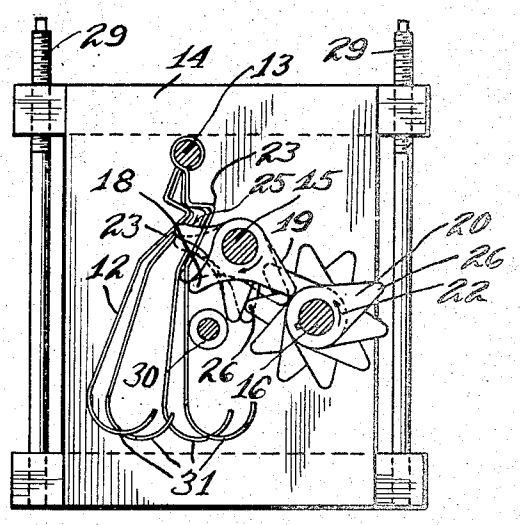

FIG-4

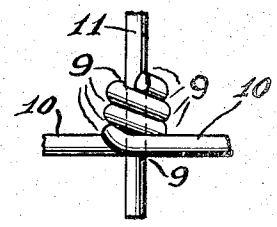

FIG-3

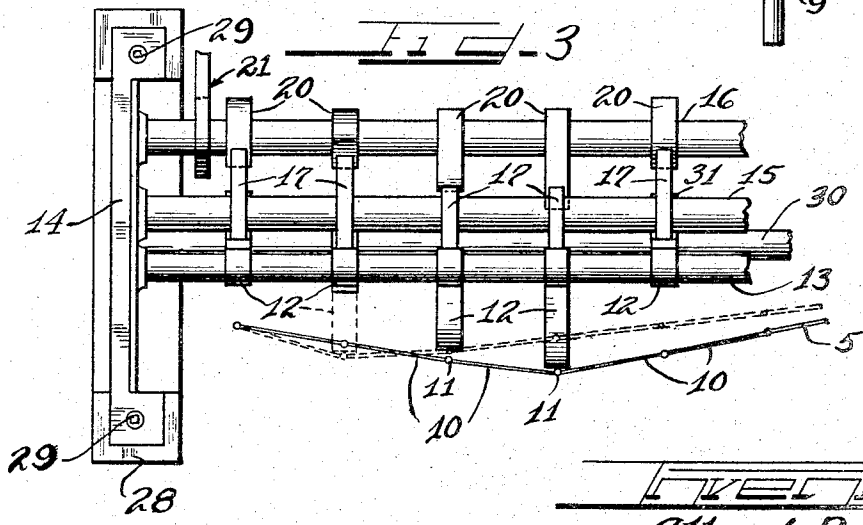

Inventors

Albert Bradley.

Edward T. Foley.

by Charles Hill Attys.

Patented July 23, 1935 2,008,813

UNITED STATES PATENT OFFICE

2,008,813

GALVANIZING APPARATUS

Albert Bradley, Sterling, and Edward T. Foley, Rock Falls, Ill., assignors to Northwestern Barb Wire Company, Sterling, Ill., a corporation of Illinois

Application July 13, 1931, Serial No. 550,294

14 Claims. (Cl. 91—12.2)

This invention has to do with the art of galvanization, and relates particularly to an improved apparatus for galvanizing wire fencing, especially for removing excess spelter adhering to joints in the wire fabric subsequent to galvanization of the fabric.

It is a well known fact that wire fabric which is galvanized after formation of the fabric is much more resistant to corrosion, not only at unbent or untwisted portions but also at bent portions, such as joints, of the wire of which the fabric is made, than is true of fabric, the individual wires of which are galvanized prior to formation of the fabric. It has been found, however, that while for the reason mentioned it is advantageous to galvanize the fabric after the latter is formed, yet such practice has in the past had the drawback that, due to the collection of the zinc or spelter at the joints because of the numerous pockets formed at the joints, a large amount of surplus and useless zinc is carried by the finished product.

The manufacture of hinge joint fence or fabric has been confined to the process by which the wires are pregalvanized, for the reason that were the fabric made of ungalvanized wire and subsequently passed through a kettle of zinc, the latter adhering to the joints would freeze the joints so that no hinging between the stay wires would be possible.

We have accordingly devised a means by which the hinge joint or other fabric may be subjected to a coating process such as galvanization and subsequently so treated that the excess spelter or zinc is removed. In addition, by the employment of the apparatus to be herein described, the full efficiency of each hinge joint of the fabric is retained after solidification of all the zinc has occurred.

The principal object of the present invention, accordingly, concerns itself with the provision of an apparatus and process by which the above ends are attained.

In accordance with the general features of the invention, we provide in connection with a device for applying liquid coating to wire fabric, such for example as a kettle of molten zinc, cam actuated kickers or kicking elements in whose paths of movement the line wires of the fabric move as they emerge from the kettle. These kicking instrumentalities are positioned to jog or otherwise agitate or impact the line wires at portions on which the zinc at the joints has not completely solidified, so that excess spelter at the joints will be removed, and at the same time, the stay wires are given a pivotal movement about the line wires and joints thus struck so that freezing of the zinc at the joints is prevented. The kicking instrumentalities are preferably so arranged that they progressively engage the respective line wires in order to insure the hinge movement of the stay wires at the times that the line wires are tapped or jogged.

Other and further important objects of this invention will be apparent from the disclosures in the specification and the accompanying drawing.

This invention (in a preferred form) is illustrated in the drawing and hereinafter more fully described.

Figure 1 is a fragmentary diagrammatic view, partly in section and partly in elevation, showing generally the features of the invention.

Figure 2 is an enlarged sectional view of a portion of the structure shown in Figure 1, but more in detail.

Figure 3 is a plan view of a portion of the agitating mechanism showing how pivotal movement of the various stay wires of hinge joint fabric is effected.

Figure 4 is an enlarged fragmentary view showing a hinge joint of the fabric to be treated by the apparatus forming the subject-matter of the present invention.

Referring now more particularly to the drawing, wherein the same parts are indicated throughout by the same reference characters, there is indicated at 1 generally a frame including standards 2 on opposite sides of the galvanizing apparatus, one side only being shown for the purpose of illustration. The standards 2 are joined by cross bars 3 only one of which is shown, and are disposed on opposite sides of a kettle 4 adapted to contain zinc or other coating material in a molten condition. The kettle 4 is provided with an entrance opening (not shown) through which the wire fabric 5 enters the kettle, and an exit opening 6 through which the fabric emerges.

For the purpose of wiping the fabric 5 as the latter emerges from the kettle 4, a box-like structure 7 is positioned over the opening 6 and contains a mass of grained charcoal or the like 8 through which the coated fabric 5 passes. The wiping material serves to remove a major portion of the excess zinc or the like adhering to the fabric 5.

However, considerable zinc attaches itself to the spaces 9 between the cooperating coils of the individual stay wires 10, and between the coils and the line wires 11, and the wiping material is

incapable of removing all of this excess zinc or spelter. Accordingly, jointed wire fence such as wire netting and the like having no hinge joints and galvanized after the fabric is produced, carries considerable excess zinc or spelter, and hinge joint wire fence in addition to carrying the excess zinc, is practically useless as hinge joint fence for the reason that the excess zinc collecting at the joints causes the latter to become frozen and thereby prevent relative hinge or pivotal moyement of the stay wires.

To the end that excess zinc at the joints may be removed from all kinds of wire fence, as well as to preserve the hinge action of the several stay wires of hinge joint fence, we have devised a construction and process which are extremely simple and yet effective, and by the use of which no slowing up of the process of galvanizing and winding galvanized fabric on the finishing reels is occasioned.

To these ends, this construction includes a plurality of kicking or jogging straps or elements 12 loosely and pivotally carried by a transverse bar or shaft 13, the ends of which are carried by end plates or brackets 14. The straps 12 are spaced apart along the rod 13 in accordance with the spacing apart of the line wires of the fabric and are positioned in juxtaposed relation to the line wires. The straps 12, as well as the cam actuating mechanism therefor to be later described, may be adjusted and thus arranged in accordance with the spacing of the line wires of fabric of different sizes of mesh.

A pair of substantially parallel cam shafts 15 and 16 have their ends carried by the end plates 14, the cams 17 on the shaft 15 being in substantial alignment with the various straps 12. Each cam 17 has a pair of angularly related arms 18 and 19, and is loosely pivotally carried by the shaft 15 so that under normal conditions the action of gravity holds each cam 17 in a predetermined position. The cams 20 on the cam shaft 16 are keyed thereto for rotation therewith and are also aligned with the several cams 17 and straps 12, suitable actuating means 21 being available for rotating the cam shaft 16 in the direction indicated by the arrow 22.

Each strap 12 has a projection 23 extending toward the corresponding cam 17 and disposed in the path of upward movement of the arm 18 of the cam 17. Upon rotation of the cam 20 in the direction of the arrow at 22, the corresponding cam 17 will turn as indicated by the arrow at 24 through an arc depending for its length on the duration of contact between the arm 19 of the cam 17 and the cam 20, the upper limit of movement of the arm 18 being indicated at 25 in Figure 2. It will be noted that for this position of the cam 17, the nose 26 of the cam 20 is about to cease contact with the arm 19 of the cam 17. As soon as the nose 26 of the cam 20 passes downwardly beyond the arm 19 of the cam 17, the latter again assumes its usual position due to the action of gravity and as shown in Figure 1. It will now be clear that as each cam 17 is caused to turn by the corresponding cam 20, the arm 18 of the cam 17 will rise and forcibly engage the projection 23 on the corresponding strap 12 and cause the latter to kick the juxtaposed line wire 11 and deflect the fabric 5 at said line wire as shown in Figure 3.

The fabric 5 will move in the direction of the arrow in response to the action of drawing means including the drawing roll 27 which is preferably constantly rotated by suitable means 28 so that the fabric 5 will be tensioned at all times and will thus tend to retain all of its parts in substantially the same plane. It will accordingly be evident that when one of the line wires 11 is kicked by a corresponding strap 12, the resultant shape of the fabric 5 will be substantially that shown in Figure 3, so that the stay wires 10 extending from the particular line wire 11 engaged by the strap 12 will undergo relative pivotal movement by which freezing of the zinc at the joints of the stay wires will be prevented.

In order to insure that the various stay wires will be shifted or pivoted about the line wires 11 in response to the kicking movement of the various straps 12, the cams 20 arranged on the cam shaft 16 are disposed with their noses 26 extending in different radial planes so that instead of all of the cams 17 striking the various straps 12 at the same time, the cams 17 will strike the straps 12 in succession as indicated in Figures 2 and 3. If desired, the cams 20 could be otherwise arranged, to cause widely spaced straps 12 to kick corresponding widely spaced line wires 11 simultaneously and as these straps recede, another set of widely spaced straps 12 could be actuated. In the illustrated embodiment of the invention, the cams 20 are substantially 36 degrees apart, thereby providing for ten successive kicks of the fabric 5 per revolution of the cam shaft 16. Any other arrangement may, of course, be provided for.

The shaft supporting plates or brackets 14 are carried in guides 28 which are secured in any suitable manner to the standards 12. Each plate 14 is slidable in its respective guide 28 as shown, and carries threaded elements 29 passing through the same and engageable with the lower portion of the guide 28 for raising and lowering the plates 14 and holding the same in adjusted position. Because of changed conditions involving the temperature of the zinc or other coating material in the kettle 4 and the temperature of the room in which the apparatus is installed, as well as other factors, it may be found desirable to vary the positions of the kicking elements 12 lengthwise of the fabric 5. This is due to the fact that under different circumstances, the molten condition of the zinc or other coating material on the fabric 5 may vary for a given point or distance of the moving fabric from the kettle 4. Moreover, it may be found advantageous for other reasons to agitate or kick the fabric 5 at a point closer to or more removed from the kettle 4 in order that excessive or insufficient removal of the zinc may be avoided. For these reasons, it is evident that adjustment of the plate 14 and consequently of the kicking instrumentalities is desirable.

The stop member 30 serves to limit the returning movement of the straps 12, which normally hang as shown in Figure 1. Each strap 12 is moreover preferably rounded at 31 in a direction away from the moving fabric 5 to avoid sharp or rough edges.

While the instrumentalities are so arranged in the illustrated embodiment of the invention for cooperation with the fabric which moves vertically out of the kettle 4, it will be understood that the invention is not dependent for its operation upon this particular arrangement but, on the contrary, the fabric 5 may be arranged to issue from the kettle 4 in any desired direction and the agitating or kicking and drawing instrumentalities could be correspondingly arranged. Moreover, the agitating instrumentali-

ties, while shown as disposed on one side of the moving fabric 5, could be reversed and arranged to strike the opposite side of the fabric 5.

From the above, it will be apparent that the mechanism constructed in accordance with the present invention is extremely simple, involves a low cost of manufacture, operates without attention, and in such a manner as not to impede the progress of the moving fabric 5 so that no slowing up of production is necessitated.

The cam shaft 16 is rotated preferably a number of times per minute, 50 for example, in order that each line wire may be displaced from the normal plane of the fabric 5 with sufficient rapidity and force to insure the throwing off of all excess zinc or other coating material at the hinge joints to thereby prevent freezing at such joints.

The frequency of rotation just stated may, of course, be varied within a fairly wide range, and may also be varied depending on the rate of movement of the fence 5. If, for a given adjustment of the plates 14 lengthwise of the fabric 5, it is found that too much zinc or other coating material is thrown off by the impact, said plates 14 may be adjusted with respect to the fabric 5 in a direction away from the kettle 4, or toward the kettle if it is found that not enough excess zinc or other coating material is being thrown off.

We are aware that many changes may be made and numerous details of construction may be varied through a wide range without departing from the principles of this invention, and we, therefore, do not desire limiting the patent granted hereon otherwise than is necessitated by the prior art.

We claim as our invention:

1. In a coating apparatus including a kettle containing coating material in a molten condition and means for drawing hinge joint fabric to be coated from said kettle, a device for agitating the fabric as it emerges from the kettle, said device comprising laterally spaced instrumentalities in juxtaposed relation to a plurality of line wires of the fabric, and means for causing said instrumentalities to successively strike the line wires of the fabric to thereby cause pivotal movement of the stay wires associated with the line wires.

2. In a coating apparatus including a kettle containing coating material in a molten condition and means for drawing hinge joint fabric to be coated from said kettle, a device for agitating the fabric as it emerges from the kettle, said device comprising instrumentalities in juxtaposed relation to a plurality of wires of the fabric, and means for causing said instrumentalities to successively strike the line wires of the fabric to thereby cause pivotal movement of the stay wires associated with the line wires, said means including intermittently movable cams and constantly rotating cams, said cams being interengageable during only a portion of each revolution of the rotating cams.

3. In galvanizing apparatus including a galvanizing kettle and means for drawing hinge joint fabric to be coated in a direction parallel to the line wires of the fabric from said kettle, a device for agitating the line wires as they emerge from the kettle, said device including supports straddling the fabric, brackets carried by said supports, means for adjusting said brackets lengthwise of the fabric, jogging mechanism carried by said brackets, said mechanism including a plurality of kicking elements normally out of contact with but in juxtaposed relation to the line wires of the fabric, a series of cams arranged for actuating said elements, said cams extending in different radial planes, whereby said elements are actuated successively by said cams, to deflect successive line wires from the normal plane of the fabric, and thus cause pivotal movement of the stay wires associated with each line wire.

4. In galvanizing apparatus including a galvanizing kettle and means for drawing hinge joint fabric to be coated in a direction parallel to the line wires of the fabric from said kettle, a device for agitating the line wires as they emerge from the kettle, said device including supports straddling the fabric, brackets carried by said supports, means for adjusting said brackets lengthwise of the fabric, jogging mechanism carried by said brackets, said mechanism including a plurality of kicking elements normally out of contact with but in juxtaposed relation to the line wires of the fabric, a series of cams arranged for actuating said elements, said cams extending in different radial planes, whereby said elements are actuated successively by said cams, to deflect successive line wires from the normal plane of the fabric, and thus cause pivotal movement of the stay wires associated with each line wire, and means for constantly rotating said cams.

5. In galvanizing apparatus including a galvanizing kettle and means for drawing hinge joint fabric to be coated in a direction parallel to the line wires of the fabric from said kettle, a device for agitating the line wires as they emerge from the kettle, said device including supports straddling the fabric, brackets carried by said supports, means for adjusting said brackets lengthwise of the fabric, jogging mechanism carried by said brackets, said mechanism including a plurality of kicking elements normally out of contact with but in juxtaposed relation to the line wires of the fabric, a series of cams arranged for actuating said elements, said cams extending in different radial planes, whereby said elements are actuated successively by said cams, to deflect by impact successive line wires from the normal plane of the fabric, and thus cause pivotal movement of the stay wires associated with each line wire.

6. In a galvanizing apparatus including a kettle containing zinc in a molten condition and means for drawing hinge joint galvanized fabric from said kettle, a device for agitating the fabric as it emerges from the kettle, said device comprising laterally spaced instrumentalities in juxtaposed relation to the line wires of the fabric, one instrumentality to a line wire, and means for causing said instrumentalities, one at a time, to strike the line wires of the fabric to thereby cause pivotal movement of the stay wires associated with the line wires and prevent freezing of the zinc at the joints.

7. In a galvanizing apparatus including a kettle containing zinc in a molten condition and means for drawing hinge joint galvanized fabric from said kettle, a device for agitating the fabric as it emerges from the kettle, said device comprising laterally spaced instrumentalities in juxtaposed relation to the line wires of the fabric, one instrumentalitiy to a line wire, and means for causing said instrumentalities to selectively strike the line wires of the fabric to thereby cause pivotal movement of the stay wires associated with the line wires and prevent freezing of the zinc at the joints.

8. In a galvanizing apparatus including a kettle containing zinc in a molten condition and means for drawing hinge joint galvanized fabric from said kettle, a device for agitating the fabric as it emerges from the kettle, said device comprising laterally spaced instrumentalities in juxtaposed relation to the line wires of the fabric, one instrumentality to a line wire, and means for causing said instrumentalities to progressively strike the line wires of the fabric to thereby cause pivotal movement of the stay wires associated with the line wires and prevent freezing of the zinc at the joints.

9. In a galvanizing apparatus including a kettle containing zinc in a molten condition and means for drawing hinge joint galvanized fabrics from said kettle, a device for agitating the fabric as it emerges from the kettle, said device comprising laterally spaced instrumentalities in juxtaposed relation to the line wires of the fabric, one instrumentality to a line wire, and means for causing said instrumentalities to selectively and progressively strike the line wires of the fabric to thereby cause pivotal movement of the stay wires associated with the line wires and prevent freezing of the zinc at the joints.

10. In combination with galvanizing apparatus including a galvanizing kettle and means for drawing galvanized hinge joint fabric in a direction parallel to the line wires of the fabric from said kettle, a device for agitating the line wires as they emerge from the kettle, said device including a plurality of kicking elements normally out of contact with but in juxtaposed relation to the line wires of the fabric, a series of rotary cams arranged for actuating said elements, said cams extending in different radial planes, whereby said elements are actuated at different times by said cams to deflect successive line wires from the normal plane of the fabric and thus cause pivotal movement of the stay wires associated with each line wire.

11. In combination with galvanizing apparatus including a galvanizing kettle and means for drawing galvanized hinge joint fabric in a direction parallel to the line wires of the fabric from said kettle, a device for agitating the line wires as they emerge from the kettle, said device including a plurality of kicking elements normally out of contact with but in juxtaposed relation to the line wires of the fabric, a series of rotary cams arranged for actuating said elements, each cam extending in a radial plane between the radial planes of the two next adjacent cams, whereby said elements are actuated successively by said cams to deflect successive line wires from the normal plane of the fabric and thus cause pivotal movement of the stay wires associated with each line wire.

12. In combination with galvanizing apparatus including a galvanizing kettle and a wiping device located at the exit of the kettle, means for drawing hinge joint fabric in a direction parallel to the line wires of the fabric from said kettle and device, mechanism for agitating the line wires as they emerge from the wiping device, said mechanism including a plurality of kicking elements normally out of contact with but in juxtaposed relation to the line wires of the fabric, a series of rotary cams arranged for actuating said elements, said cams extending in different radial planes, whereby said elements are actuated at different times by said cams to deflect successive line wires from the normal plane of the fabric and thus cause pivotal movement of the stay wires associated with each line wire.

13. In combination with galvanizing apparatus including a galvanizing kettle and a wiping device located at the exit of the kettle, means for drawing hinge joint fabric in a direction parallel to the line wires of the fabric from said kettle and device, mechanism for agitating the line wires as they emerge from the wiping device, said mechanism including a plurality of kicking elements normally out of contact with but in juxtaposed relation to the line wires of the fabric, a series of rotary cams arranged for actuating said elements, each cam extending in a radial plane between the radial planes of the two next adjacent cams, whereby said elements are actuated successively by said cams to deflect successive line wires from the normal plane of the fabric and thus cause pivotal movement of the stay wires associated with each line wire.

14. In combination with galvanizing apparatus including a galvanizing kettle and means for drawing galvanized hinge joint fabric in a direction parallel to the line wires of the fabric from said kettle, a device for agitating the line wires as they emerge from the kettle, said device including a plurality of kicking elements normally out of contact with but in juxtaposed relation to the line wires of the fabric, a series of rotary cams arranged for actuating said elements, said cams extending in different radial planes, whereby said elements are actuated at different times by said cams to deflect successive line wires from the normal plane of the fabric and thus cause pivotal movement of the stay wires associated with each line wire, and means for adjusting the device toward and away from the kettle.

ALBERT BRADLEY.
EDWARD T. FOLEY.