J. M. SCHUTZ.

BOTTLE COOLER.

APPLICATION FILED JAN. 13, 1913.

1,068,824.

Patented July 29, 1913.

2 SHEETS—SHEET 1.

Fig. 1

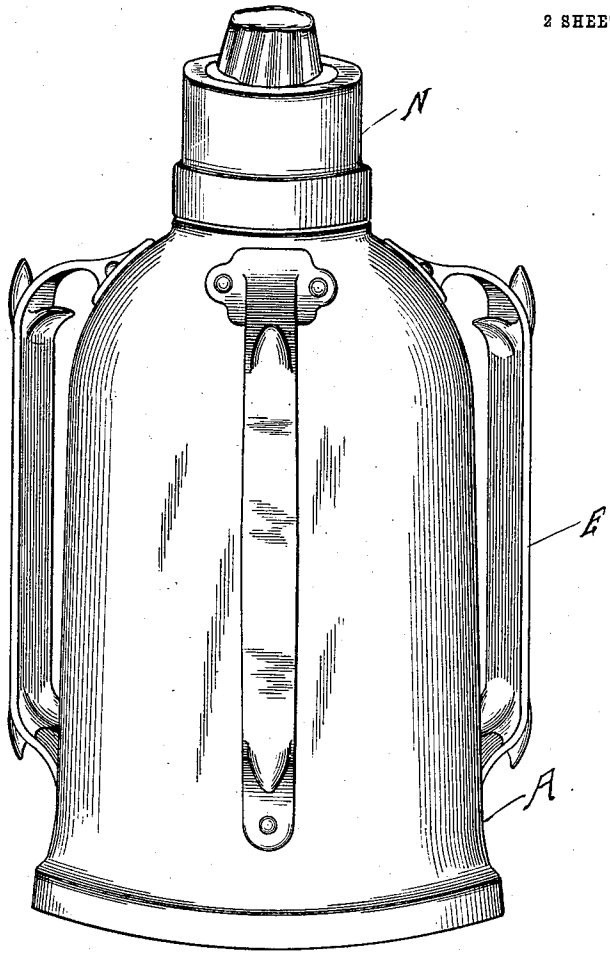

Fig. 2

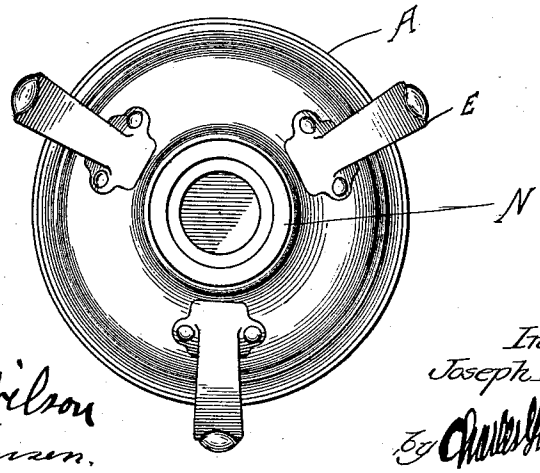

Witnesses:

Edward Wilson

John M. Hansen.

Inventor:

Joseph M. Schutz.

By Charles Gilbert Hawley

Atty.

COLUMBIA PLANOGRAPH CO., WASHINGTON, D. C.

J. M. SCHUTZ.

BOTTLE COOLER.

APPLICATION FILED JAN. 13, 1913.

1,068,824. Patented July 29, 1913.

2 SHEETS—SHEET 2.

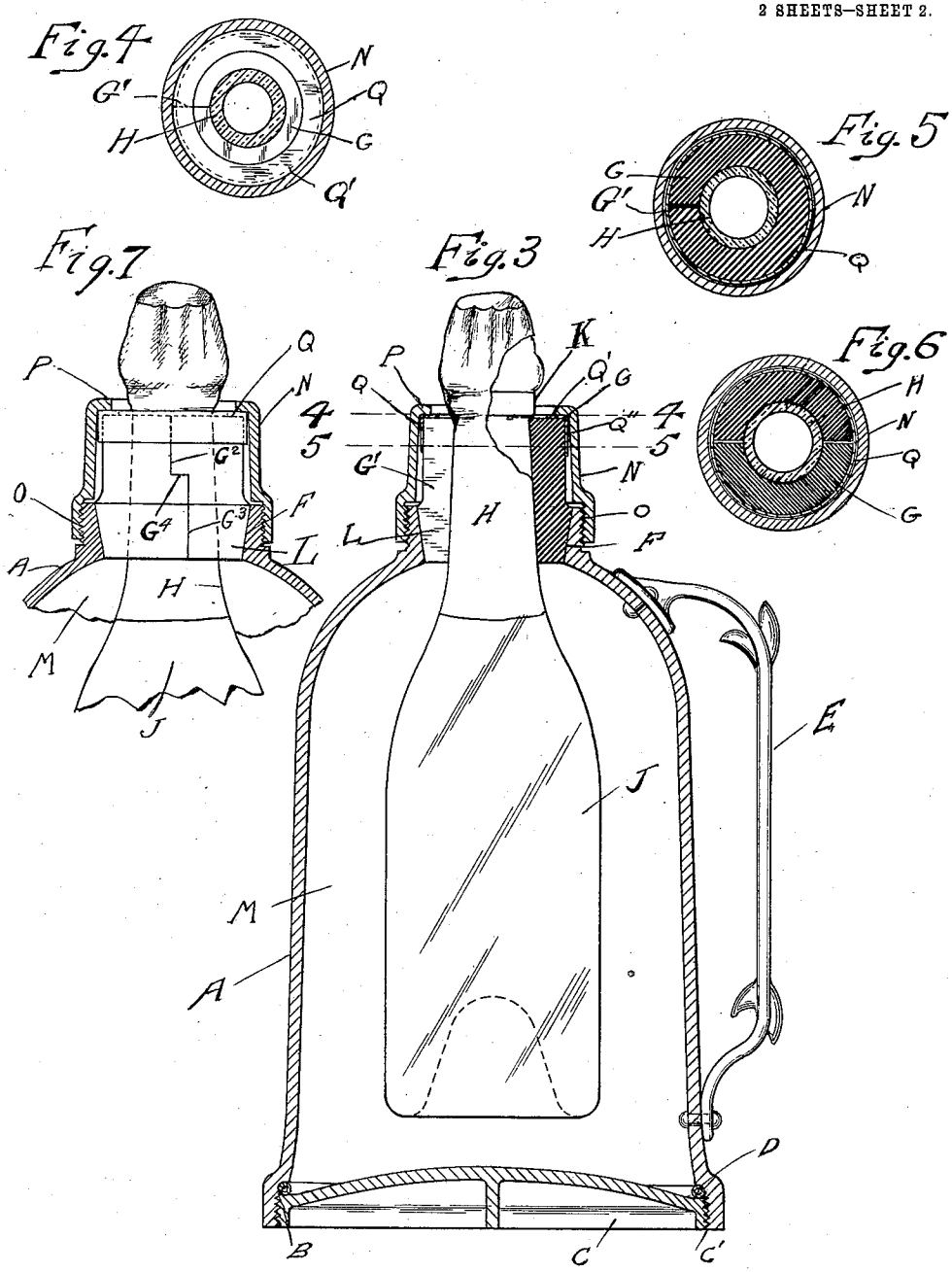

Witnesses:

Edward F. Wilson

John M. Hansen.

Inventor:

Joseph M. Schutz.

by [illegible]

Atty.

COLUMBIA PLANOGRAPH CO., WASHINGTON, D. C.

UNITED STATES PATENT OFFICE.

JOSEPH M. SCHUTZ, OF CHICAGO, ILLINOIS.

BOTTLE-COOLER.

1,068,824. Specification of Letters Patent. Patented July 29, 1913.

Application filed January 13, 1913. Serial No. 741,826.

To all whom it may concern:

Be it known that I, JOSEPH M. SCHUTZ, a citizen of the United States, and a resident of Chicago, county of Cook, and State of Illinois, have invented certain new and useful Improvements in Bottle-Coolers, of which the following is a specification.

My invention relates to improvements in coolers and has particular reference to improvements in portable bottle coolers.

The object of my invention is to provide a portable cooler particularly adapted for cooling wine in bottles; which shall be economical in its use of the cooling medium; which shall be so arranged that the empty bottle can be quickly removed and a full bottle placed therein; which shall, when in usable condition, be tightly sealed against the leakage of any of the cooling medium; which shall have a pleasing appearance, and which shall require the use of but a relatively small quantity of the cooling or refrigerating material.

A further object of my invention is to provide a wine cooler for wine bottles, which shall be capable of replacing the ordinarily used unsightly pail of broken ice.

A further object of my invention is to provide a bottle cooler for wine in which the bottle will be sealed in the casing, by being tightly clasped about the neck, and in which the bottle will otherwise be free from contact with the inclosing casing.

A further object is to provide a device for maintaining a bottle of wine at an even, low temperature for a considerable length of time and that, without attention after the bottle has been placed therein.

My invention resides in a bottle cooler comprising a casing adapted to contain the bottle, a split cork adapted to be placed about the neck of the bottle, and means for tightly clamping the cork about the neck of the bottle and in the upper part of the casing.

My invention also resides in a bottle cooler having a removable closure at its lower end and having a split cork at its upper end adapted to be tightly compressed around and into contact with the neck of a bottle whereby the bottle is tightly sealed into the casing.

My invention also resides in a bottle cooler having the features of construction and the characteristics hereinafter described and claimed, and by which the above and other objects are attained.

My invention will be more readily understood by reference to the accompanying drawings in which:

Figure 1 is a perspective side elevation of a bottle cooler made in accordance with my invention; Fig. 2 is a top plan view of the bottle cooler; Fig. 3 is a central, vertical sectional view of the cooler showing the bottle in position; Fig. 4 is a horizontal section on the line 4—4 of Fig. 3; Fig. 5 is a section similar to Fig. 4 on the line 5—5 of Fig. 3; Fig. 6 is a section similar to section 5 showing a modified form of the packing ring; and Fig. 7 is a fragmentary section similar to Fig. 3, showing a modified form of packing ring.

My invention is particularly adapted for the convenient cooling of wine in bottles and before the corks have been disturbed, and maintaining the wine at a low temperature for many hours, and, as illustrated in the drawings, it consists of a hollow casing A, having the general shape of an elongated bottle. This casing is preferably made of metal, such as aluminum or similar metal, which will take a high polish and have a pleasing appearance when finished. I provide the casing with a large opening B in its lower end, and I close this opening by means of a closure C removably securing it in position in the bottom of the casing, preferably by a screw connection, C′, and providing thereat a suitable packing rim D which, when the closure is in position is compressed and prevents any leakage between the closure and the casing proper. The casing may be provided with one or more handles, such as shown at E, and I preferably provide it with three handles, regularly spaced around the casing, giving it somewhat the form and appearance of a loving cup. The side walls of the casing are drawn in at the upper end to provide a reduced opening F thereat, which is large enough to permit the passage of the largest bottle cork likely to be used. This opening receives a packing ring or cork G which is adapted to surround the neck H of the bottle J. The bottle, as illustrated in the drawings, may represent a wine or champagne bottle, and this is provided at the upper end of the neck with a circumferential enlargement or flange K, and the part of the

neck encircled or covered by the packing ring G is consequently smaller than the upper end of the neck and in order to be able to conveniently place the packing ring on the neck below the flange or enlargement K, I split or cut the cork G at one or more points G′ longitudinally throughout its length so that it can be opened up or separated for placement upon the neck of the bottle. This opening F in the top of the casing is tapered downwardly, being smaller at its lower end than at its upper end, and the portion L of the cork or packing ring G which fits within this tapered portion is tapered correspondingly so that it is adapted to snugly fit within the tapered opening F. In the preferred form of my invention, as illustrated in Fig. 1, the opening is tapered downwardly so that when the cork or packing ring G is seated in the opening and the bottle is in position within the cork, the cork is supported in position by the casing and the cork in turn supports the bottle. The casing is of such a length or depth that the bottle is supported clear of the bottom of the casing, and it is of such a diameter that a space M is provided between the bottle and the walls of the casing. The space around the bottle within the casing is adapted to receive ice or ice and salt, or any other suitable refrigerating or temperature-changing material, for the purpose of cooling or warming the contents of the bottle. The device is intended to be used not only to cool the contents of the bottle, but also to heat the contents thereof. It is also intended for use to pour the wine from the bottle when cooled or heated and consequently I provide means for retaining the packing ring or cork G rigidly in position and for tightly closing the casing at its upper end around the neck of the bottle. For this purpose I provide a cap N, which is adapted to be secured upon and to the upper end of the casing, preferably by means of a threaded joint O, and it is of such a size that it substantially snugly fits over the packing ring. This cap is provided with an inwardly projecting flange P at its upper end which overlaps the upper end of the cork and the cap is of such a length that when the cap is screwed down upon the casing in position it engages the upper end of the cork and pushes the cork down into the tapered opening F, thereby tightly compressing it around the neck of the bottle and closing the split or cut G′ tightly together. This effectually prevents leakage at this point when the casing is tipped to pour the contents from the bottle.

The cork or packing ring G may be made of rubber, cork, or other suitable packing material, and I protect the upper end of the cork against abrasion by the flange P of the cap N by means of a metallic ring Q of an angle section which fits the upper end of the cork. This ring has a flat flange Q′ which overlaps the upper end of the cork, and a circumferential flange Q″ which fits the outer circumference of the cork. This metallic ring is provided with a central hole of sufficient size to permit its easy placement in position over the cork of the bottle, and upon the packing ring after the packing ring has been put in position upon the neck of the bottle. This metallic ring therefore serves the purpose of temporarily holding the packing ring in place on the bottle until it can be clamped permanently and compressed in position by means of the cap N.

As shown in Fig. 3, the cut G′ may be straight from the top to the bottom of the packing ring and in Fig. 7 I have shown a slightly modified form of cut; that is, it may be zigzag in form, the upper part G^2 being on one line and the lower part G^3 being offset therefrom, and these two cuts, each of which extends substantially half the length of the cork, being joined by a transverse cut G^4. This formation provides a split in the cork which does not have to be fully compressed circumferentially in order to prevent leakage at this point.

In Fig. 6 I have shown the packing ring cut or divided at two points in its circumference. This form of packing ring is particularly useful in cases where the cork is formed of a material which cannot be otherwise expanded sufficiently to place it in position upon the neck of the bottle.

In using the preferred form of my invention, I first remove the cap N and the packing ring G from the casing and I take out closure C. I then insert the bottle into the casing through the lower end, projecting the neck upwardly through the opening F. I then place the packing ring G upon the neck of the bottle and temporarily hold it in position by means of the metal ring Q. I then seat the packing ring in the tapered opening F and permanently compress it and secure it on the bottle in position by screwing the cap N down into position upon the casing. I then reverse or turn the casing up-side-down and fill the space M around the bottle with the refrigerating material, such as cracked ice, or ice and salt, or other suitable material, adapted to give the liquid contained within the bottle the desired temperature. I then close the casing by placing the closure C in position, forcing it against the packing ring G and the casing is then completely sealed against leakage both at its upper and its lower ends. Having thus sealed the bottle within the casing, it can then be stood upright in its normal position and allowed to bring the liquid within the bottle to the desired temperature. Thereafter the cork may be with-

drawn and the device may be used to pour the liquid from the bottle as desired.

The high polish which the casing is adapted to receive prevents the rapid absorption of heat or the rapid dissipation of heat and consequently the interior of the casing and its contents can be maintained at a desired temperature for a considerable length of time. Furthermore, when the device is used to cool wines, the quantity of ice used is relatively small, considerably less than that which it is necessary to use in the unsightly pails ordinarily employed for the cooling of wines and particularly of champagne.

My device, as thus disclosed, is quite ornamental instead of unsightly.

One very great advantage in the use of my invention is that the wine may be kept at an even, low temperature for some hours even after the bottle has been opened. One beneficial result of this, among many others, is that the gases are prevented from escaping from the contents remaining in the bottle and consequently the last drop from the bottle is in exactly as good condition as the first, even though the bottle has been open a relatively long time.

As many modifications of my invention will readily suggest themselves to one skilled in the art, I do not limit or confine my invention to the specific structures herein shown and described.

I claim:

1. A bottle having a neck, the upper part thereof being enlarged, in combination with a closed casing adapted to receive the bottle and a cooling medium, said casing having an aperture in its upper end through which the bottle neck projects, a ring packing within said aperture split for placement upon the neck below the enlarged end and adapted to support the bottle on said enlarged end, and means for clamping the ring tightly between the wall of the aperture and the neck of the bottle to provide a tight joint at this point.

2. In a bottle cooler the combination with a casing adapted to inclose a bottle and a cooling medium, said bottle having a neck and an enlargement at the upper end thereof, said casing having an aperture at its upper end through which the neck of the bottle projects, a split ring packing adapted to be placed on the neck of the bottle below said enlargement and to fit within said aperture, and means for compressing the ring between the neck of the bottle and the wall of the aperture for making a tight joint at this point and for supporting said bottle in position.

3. In a bottle cooler, a bottle, in combination with a closed casing adapted to inclose the bottle, said casing having an aperture in its upper end through which the neck of the bottle projects, a split ring packing interposed between the neck of the bottle and the casing, and means for compressing said packing to prevent leakage at this point and to support the body of the bottle within the casing free of contact with the casing.

4. In a bottle cooler the combination with a bottle having a neck the upper end of which is enlarged, in combination with a closed casing adapted to receive the bottle and a cooling medium, said casing having an aperture in its upper end through which the bottle neck projects, a split ring packing adapted to be placed upon the neck of the bottle below and in contact with the enlarged end for supporting the bottle, and adapted to fit within said aperture, and means for compressing the packing ring between the wall of the aperture and the neck of the bottle to prevent leakage at this point.

5. In a bottle cooler, the combination with a bottle having an enlarged upper end, of a casing having a relatively large opening in its lower end and a relatively small opening in its upper end, the larger opening permitting the insertion of the bottle into the casing and the smaller opening permitting the neck of the bottle to project at the upper end of the casing, a closure for said large opening, a split expansible and compressible packing ring interposed between the neck of the bottle and the adjacent wall of the casing, and in contact with said enlarged end for supporting the bottle, and means for compressing the ring tightly in position to prevent leakage at this point.

6. A bottle cooler comprising a suitable casing and a bottle adapted to be inclosed thereby, the bottle having an elongated neck and an enlarged upper end, and the casing provided with an opening through which the neck of the bottle projects, a packing ring split for placement upon the bottle neck below the enlarged end and adapted to fit tightly between the neck of the bottle and the wall of said opening, a metal ring of a size to fit over the upper end of the packing ring to hold the same in position and to protect the packing ring against abrasion, the lower end of the packing ring being externally downwardly tapered, a complementary tapered seat in the upper end of the casing within said opening, and a screw cap covering the packing ring and adapted to force it into its seat and thereby compress it around the bottle neck to make a tight joint and to rigidly support the bottle.

7. In a bottle cooler a suitable closed casing, a bottle adapted to be inclosed thereby and having an elongated neck and an enlargement at the upper end, of the neck, a split packing ring substantially fitting the neck of the bottle below the enlarged end, and having a tapered lower end, said opening in the casing having a tapered seat in

which the packing ring fits, and a removable cover adapted to compress the packing between the tapered seat and the neck of the bottle and to retain the packing ring and the bottle rigidly in position.

8. In a device of the class described a bottle having an elongated neck and an enlargement at the upper end, a relatively long packing ring adapted to make a tight joint between the neck of the bottle and the casing, said packing ring having a longitudinal split or cut in one side adapting it to be opened for the purpose of placing it upon the bottle neck below and in contact with said enlarged end, and means for compressing the packing ring between the neck of the bottle and the adjacent wall of the casing for making a liquid tight joint at this point.

9. In a cooling device, a bottle having a neck and an enlarged upper end thereon in combination with a casing adapted to inclose the body of the bottle and a cooling medium, and having an opening through which the neck of the bottle projects, a compressible cork arranged between the neck of the bottle and the adjacent wall of the casing and adapted to contact with the said enlarged upper end to support the body of the bottle free of contact with the wall of the casing and means for compressing the cork to form a liquid tight joint between the bottle neck and the casing.

10. A bottle having an elongated neck in combination with a casing adapted to inclose the body of the bottle and having an opening at one end thereof through which the neck of the bottle projects, an elongated packing ring in engagement with the bottle neck and with the casing and adapted to suspend the bottle in the casing and to provide a liquid tight joint between the bottle neck and the casing.

11. A bottle in combination with a closed casing adapted to contain the body of the bottle and a temperature changing medium, and having an opening through which the neck of the bottle projects, and means for clamping the bottle neck in said opening for forming a tight joint at this point and for holding the body of the bottle out of contact with the casing wall.

In testimony whereof, I have hereunto set my hand, this 10th day of January, 1913, in the presence of two subscribing witnesses.

JOSEPH M. SCHUTZ.

Witnesses:
ARTHUR W. NELSON,
L. A. PLAGG.

Copies of this patent may be obtained for five cents each, by addressing the "Commissioner of Patents, Washington, D. C."