Oct. 3, 1961 S. J. KROL ET AL 3,002,669

TERMINAL CRIMPING MACHINE

Filed Sept. 12, 1958 2 Sheets-Sheet 1

FIG 1

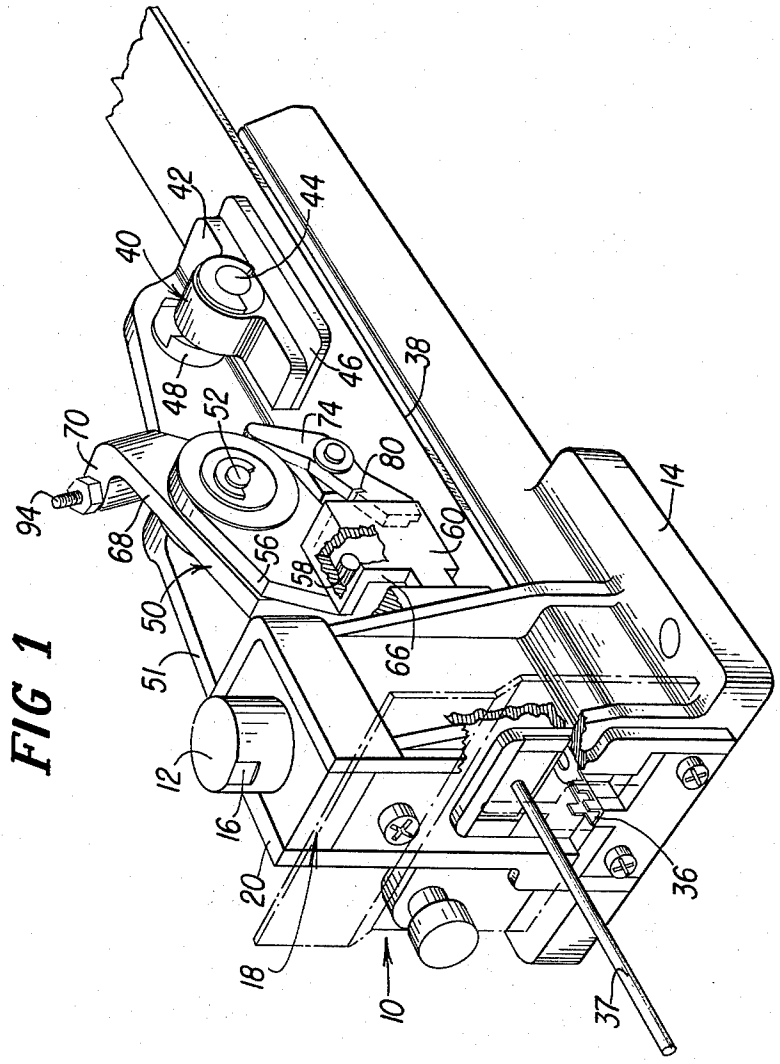

INVENTORS
Stanley T. Krol
BY John B. Sola
Byron Hume Groen & Clement
Attys.

Oct. 3, 1961 S. J. KROL ET AL 3,002,669

TERMINAL CRIMPING MACHINE

Filed Sept. 12, 1958 2 Sheets-Sheet 2

FIG. 3

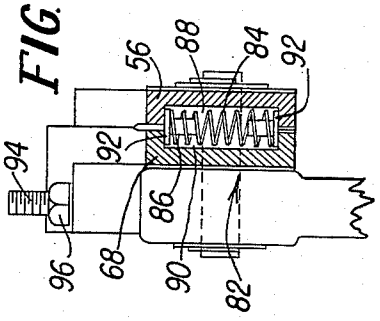

FIG. 4

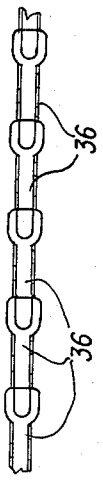

FIG. 2

INVENTORS
Stanley T. Krol
John B. Sola

BY

Byron Blume Groen & Clement
Attys.

United States Patent Office 3,002,669 Patented Oct. 3, 1961

3,002,669

TERMINAL CRIMPING MACHINE

Stanley J. Krol, Bensenville, and John B. Sola, Chicago, Ill., assignors to Malco Manufacturing Company, Chicago, Ill., a partnership

Filed Sept. 12, 1958, Ser. No. 760,644
4 Claims. (Cl. 226—71)

This invention pertains to an automatic machine for crimping terminal connectors on wire conductors and in particular to such a machine that will permit changing between terminals of different types and sizes and wires of different sizes with a minimum of or no adjustment.

The rapid advance in the development of the electronics industry has necessitated the design and construction of numerous types of machines for manufacturing the various components used in the assembly of the electronic circuits. One component common to most circuits is the terminal connectors which are generally crimped to a wire lead. Numerous machines have been developed for crimping such terminal connectors to the wire leads such as that shown in our co-pending application Serial 733,712, filed May 7, 1958, and assigned to the same assignee.

One of the major problems encountered in crimping operations is that many times it is necessary to crimp various types and sizes of terminal connectors as well as different sizes of wires with and without insulation. While the heretofore known machines of this type have been highly successful, they do necessitate a rather complex adjustment of the machine each time a different size and/or type terminal or wire is to be processed by the machine. These adjustments require skill on the part of the operator and at the same time result in down time for the machine and consequently cause a considerable lowering of production output. For these reasons it is a foremost feature and object of the invention to provide a machine for crimping terminal connectors on wire leads that will permit change of one type or size of terminal connector or wire conductor to another type and size with little or no adjustment.

Another feature and object of the invention resides in the provision of a feeding mechanism that will permit alterations in the crimp height and the change between the various types and sizes of terminal connectors and wire conductors with substantially little or no adjustment of the crimping machine and the feeding mechanism in particular.

Another object of the invention resides in the provision of a feeding mechanism especially suited for feeding a chain of terminal connectors into a machine for crimping the connectors onto wire conductors.

Another object of the invention resides in the provision of a feeding mechanism which may be adjusted when necessary with a minimum of skill and effort.

These and other objects of the invention will be apparent upon reading of the specification with reference to the following drawings.

In the drawings:

FIGURE 1 is a perspective view of the crimping machine embodying the invention.

FIGURE 2 is a sectional view of the crimping machine shown in FIGURE 1 and particularly illustrating the feeding mechanism used in the construction of the machine.

FIGURE 3 is a sectional view taken along the lines 3—3 in FIGURE 2.

FIGURE 4 illustrates a chain of one type of terminal that may be crimped in the machine shown in FIGURE 1.

Referring now to FIGURE 1, there is shown a crimping machine embodying the invention generally denoted by the numeral 10. This crimping machine is adapted to

receive a chain of terminal connectors, such as that shown in FIGURE 4 from a suitable source such as reel or storage drum positioned at some remote location, and crimp the terminal connectors onto wire leads fed into the machine. The terminal connectors may be any one of numerous types that are used in electrical circuits. While the specification and the drawings are in terms of a crimping machine in which the chain of terminal connectors is fed to the rear of the ram, it will be apparent upon development of the specification that the subject invention is applicable to those machines in which the chain is fed to the side of the ram, as shown in the aforementioned co-pending application.

The crimping machine 10 is adapted to be mounted in a punch press (not shown) so that the head 12 is secured to the ram of the press by some suitable means. It should be kept in mind that the stroke of the press is generally a fixed amount, for example, 1½ inches. While the stroke is fixed as to length, it may be displaced. The displacement of the stroke permits the crimp height of the crimping machine 10 to be varied as will be explained later in greater detail. This displacement is normally facilitated by adjustment of the press ram which in turn causes a corresponding adjustment in the crimping machine.

The crimping machine 10 includes a base 14 which is adapted to be secured to the anvil of the press in which the machine is mounted. As was mentioned previously, the head 12 of the crimping machine 10 is adapted to be received in the ram of the press and secured by means of a set screw tightened against the land 16.

The head 12 is secured to the ram of the crimping machine 10 which is generally denoted by the numeral 18. The ram 18 is received within the U-shaped column 20 of the base 14, as shown in FIGURE 1.

As best shown in FIGURE 2, the ram 18 includes the ram body 22, to which is secured the crimping die 24 by means of the bolt or stud 26. A spacer block 28 is disposed intermediate the crimping die 24 and the ram body 22 so as to maintain the two in spaced relationship. The crimping face of the crimping die 24 is of any suitable shape which will crimp the prongs of the terminal connectors 36 on the lead wires 37. The crimping die 24 is adapted to co-operate with the anvil 30 which is mounted on the base 14 as shown in FIGURE 2 along with the shear anvil assembly generally denoted by the numeral 32. The shear anvil assembly 32 co-operates with the cutter blade 34 which is mounted intermediate the spacer member 28 and the ram body 22. The cutter blade 34 cuts or separates the terminal connectors 36 from the chain as they are fed into the machine.

Intermediate the crimping die 24 and the cutter blade 34 is a stationary stripping blade 35 which is mounted between the side walls of the U-shaped column 20. The stripping blade 35 removes any crimped terminals which tend to lodge in the crimping face of the die 24.

As was mentioned previously, the terminal connectors are fed to the machine 10 in the form of a long chain from a reel or some suitable storage means. The chain is received on the feed arm 38 which extends rearwardly from the anvils 30 and 32. The feed arm 38 consists primarily of a strip of metal of sufficient length and width to guide the chain of terminal connectors into position for the crimping operation.

A braking device generally denoted by the numeral 40 is mounted above the feed arm 38 in order to prevent undesirable forward or rearward movement of the chain during the crimping operation. The braking device 40 consists of a compression pad holder 42 which is mounted on the pivot pin 44 secured to the base 14. A compression pad 46 is secured to the lower surface of the pad holder 42 and is adapted to contact the chain of ter-

minal connectors as they move along the feed arm 38. The holder 42 is secured to an eccentric member 48 which permits it to be moved from engaging position as shown in FIGURE 2 to a nonengaging position. The holder 42 may be biased toward engaging position by some suitable means such as a coil spring (not shown). The coil spring is preferably such that it permits the chain to be moved forwardly so as to feed the terminals onto the anvils 30 and 32 by the positive force of a feeding mechanism as will be described hereinafter, but at the same time eliminates any tendency for the chain to move due to inertia. This arrangement also prevents any rearward movement of the chain during the repositioning of the feeding mechanism as will be seen later on.

The feeding mechanism, generally denoted by the numeral 50, is mounted on the wall 51 of the base 14 by the pivot pin 52 and spring washer 54. The feed mechanism 50 includes the cam arm 56 which is pivotally mounted at one end by the pivot pin 52 on the wall 51. At the other end of the cam arm 56 is a pin 58 which is adapted to co-operate with the feed bracket or cam 60 for oscillating the cam arm 56.

The cam 60 is secured to the ram body 22 by means of the stud or bolt 62. The cam 60 includes the vertically spaced lugs 64 and 66 which contact the pin 58 during the movement of the ram body away from and toward, respectively, the anvils 30 and 32. It will be noticed that there is a considerable amount of dwell between the lugs 64 and 66. This dwell, when the ram body moves from the crimping position to the retracted position, permits the crimped terminal to be stripped from the die 24 before the next terminal is fed into crimping position, as will be seen later on. The amount of dwell may be varied in order to suit the particular application.

The feed mechanism 50 further includes a feed arm 68 which is pivotally mounted on the pin 52. The feed arm 68 includes a laterally extending lug 70, as best shown in FIGURE 1, which by means of a stop member limits the amount of rotation of the arm 68, as will be explained later on. Pivotally secured to the lower end of the feed arm 68 is a feed finger 74 which is retained on the pin 76 by means of the spring washer 78. The feed finger 74 is biased in a counterclockwise direction by means of the spiral spring 80 so as to engage the terminal chain disposed on the feed arm 38 as is fully explained in the aforementioned application.

The cam arm 56 and the feed arm 68 are secured together by means of the spring coupling or clutch generally denoted by the numeral 82. The spring clutch 82 includes the coil spring 84 which is received in the compartment 86 formed by the cavity 88 in the arm 56 in co-operation with the cavity 90 in the arm 68. As shown in the drawing, the coil spring 84 is positioned so that its longitudinal axis lies along the parting line between the arms 56 and 68. In order to facilitate equal engagement of the arms 56 and 68 by the coil spring 84 when they are in their normal positions, the spring clutch 82 includes the cap members 92 which are received in the ends of the spring. It can now be seen that when there is movement of one arm with respect to the other, the spring 84 will be compressed so that the arms are biased toward their normal positions and to resiliently resist such rotation. As a result, the two arms 56 and 68 are resiliently joined by the spring clutch 82 which permits rotation of the arm 56 while the arm 68 is maintained in a stationary position.

An adjustable stop member 94 is threadably secured to the lug 70 by means of the nut 96 and is adapted to abut the surface 72 when the arm 68 is rotated in a clockwise manner. This arrangement permits the feed stroke to be varied in order to suit terminals of various lengths, as will be described later on.

Now that the various elements included in the construction of the crimping machine have been disclosed, its operation will be described. When the ram 18 moves from its retracted position toward the crimping position, as shown in FIGURE 2, the crimping die 24 crimps the terminal 36 onto the lead wire 37. As the ram 18 moves further downward, the cutter blade 34 shears the crimped terminal from the chain. When the crimping die 24 has reached its lowermost position or crimp height, the terminal 36 should be fully crimped to the lead wire 37. At this point the ram 18 then begins to move upwardly to the retracted position. If the terminal 36 should be lodged in the die 24, it will be disengaged by the stripper blade 35. As the ram 18 moves further upward, the lug 64 of the feed cam 60 is brought into engagement with the pin 58 on the cam arm 56. The upward movement of the ram 18 will cause the arm 56 to be rotated in a clockwise direction. The arm 56 will in turn rotate the feed arm 68 by means of the spring clutch 82. When the arm 68 is rotated in a clockwise direction, the feed finger 74 is moved forwardly so as to move the next terminal connector onto the anvil 30. The forward movement of the chain will place an uncrimped terminal on the anvil 30.

For obvious reasons it is necessary that the forward movement of the chain for each upward stroke of the ram 18 be limited to a distance substantially equal to the length of one terminal. This movement is controlled by the adjustable stop 94 which abuts the surface 72. If the terminals are relatively long, then the stop 94 projects only a relatively short distance below the lug 70. On the other hand, if the terminals are relatively short, then the stop 94 projects a relatively long distance below the lug 70. As a result of this arrangement, when the feed finger 74 has pushed the chain forward the length of a single terminal, the feed arm 68 is restrained from further rotary movement by the abutment of the stop member 94 on the surface 72. The cam arm 56, however, may be further rotated by the upward movement of the cam 60 even though the arm 68 is restrained in the manner previously described by reason of the spring coupling 82. Thus, if it should be desired to crimp a terminal of a longer or shorter length, it would be necessary to adjust the bolt 94 a corresponding amount. However, it would not be necessary to change the cam 60 since relative movement between the arms 56 and 68 is permitted by the spring clutch 82 as previously described. As a result of this arrangement, it is possible to make a simple adjustment of the stop 94 in order to accommodate terminal connectors of various lengths by simply turning the stop member 94 until it projects the desired amount below the lug 70.

As was mentioned previously, the stroke of the ram 18 is maintained at a constant, even though the stroke may be displaced. For example, if it should be desired to raise the crimp height of the machine in order to accommodate a larger or different type of wire or a different type terminal, the entire stroke will be displaced the same amount so that the stroke length is maintained at a constant. This means that if the crimp height is raised, the cam 60 and the lug 64 will be raised a corresponding amount in the uppermost position. As a result of increasing the crimp height, the cam arm 56 will be rotated even further as a result of the higher upward position of the lug 64. Generally the additional rotation of the arm 56 will be relative to the arm 68 due to the abutment of the stop member 94. This relative movement, of course, is permitted by the spring clutch 82 in the manner previously described. As the result of this arrangement, the subject feeding mechanism 50 permits the adjustment of the crimp height without changing the cam 60.

As can now be seen, the crimping machine as described herein is especially suited to accommodate wires and terminal connectors of various types and sizes. Although a preferred embodiment of the invention has been described, it is to be understood that this is merely by way of example and is in no manner to be construed as a

limitation. It is contemplated that certain modifications may be made within the scope of the claims without departing from the spirit of the invention.

What is claimed is:

1. A device adapted to be used for feeding a chain of terminal connectors into a ram type machine for crimping the connectors to wire leads comprising a first arm pivotally mounted and connected to the ram for oscillatory movement thereby, and a second arm pivotally mounted at one end concentric with said first arm and connected by resilient means to said first arm for oscillatory movement therewith, and said resilient means comprised of said first arm having a first cavity, said second arm having a second cavity, normally at least partially open to said first cavity and a coil spring confined in an axial direction by the co-operation of said first and second cavities so that movement of said first arm with respect to said second arm further confines said coil spring so as to resist relative movement between said first and second arms.

2. A device adapted to be used for feeding a chain of terminal connectors into a ram type machine for crimping the connectors to wire leads comprising a first arm pivotally mounted and connected to the ram for oscillatory movement thereby, a second arm pivotally mounted at one end concentric with said first arm and connected by resilient means to said first arm for oscillatory movement therewith, means for limiting the movement of said second arm so that the movement of the chain is limited to a distance substantially equal to the length of a single terminal for each oscillation, said resilient means comprised of said first arm having a first cavity, said second arm having a second cavity, normally at least partially open to said first cavity and a coil spring confined in an axial direction by the co-operation of said first and second cavities so that movement of said first arm with respect to said second arm further confines said coil spring so as to resist relative movement between said first and second arms, and finger means connected to said second arm and biased toward engagement with the terminal chain, said finger means adapted to feed the terminal chain upon upward movement of the ram.

3. In a machine for receiving a chain of terminal connectors and for crimping the same on wire leads including a base member and ram member movable toward and away from said base member, the combination comprising a first arm pivotally mounted on said base member and connected to said ram for oscillatory movement thereby, a second arm pivotally mounted at one end concentric with said first arm and connected by resilient means to said first arm for oscillatory movement therewith, and means for limiting the movement of said second arm so that the movement of the chain is limited to a distance substantially equal to the length of a single terminal for each oscillation, said resilient means comprised of said first arm having a first cavity, said second arm having a second cavity, normally at least partially open to said first cavity and a coil spring confined in an axial direction by the co-operation of said first and second cavities so that movement of said first arm with respect to said second arm further confines said coil spring.

4. A device adapted to be used for feeding a chain of terminal connectors into a ram type machine for crimping connectors to wire leads comprising: a first arm pivotally mounted and connected to the ram for oscillatory movement thereby; a second arm pivotally mounted at one end concentric with said first arm and connected by resilient means to said first arm for oscillatory movement therewith; means for limiting the movement of said second arm so that the movement of the chain is limited to a distance substantially equal to the length of a single terminal for each oscillation, said resilient means comprising a spring member engaging said first and said second arms and normally holding said arms in a predetermined angular relationship, and finger means connected to said second arm and biased toward engagement with the terminal chain, said finger means adapted to feed the terminal chain upon upward movement of the ram.

References Cited in the file of this patent

UNITED STATES PATENTS

1,194,694	Allen	Aug. 15, 1916
1,346,089	Hasselstrom	July 6, 1920
2,631,213	Martines	Mar. 10, 1953
2,705,797	Handel	Apr. 12, 1955