Jan. 9, 1940. H. R. CHILDS 2,186,135

CONTINUOUS PROCESS FOR THE MANUFACTURE OF CELLULOSE DERIVATIVE CUT STAPLE YARN

Filed Dec. 3, 1936

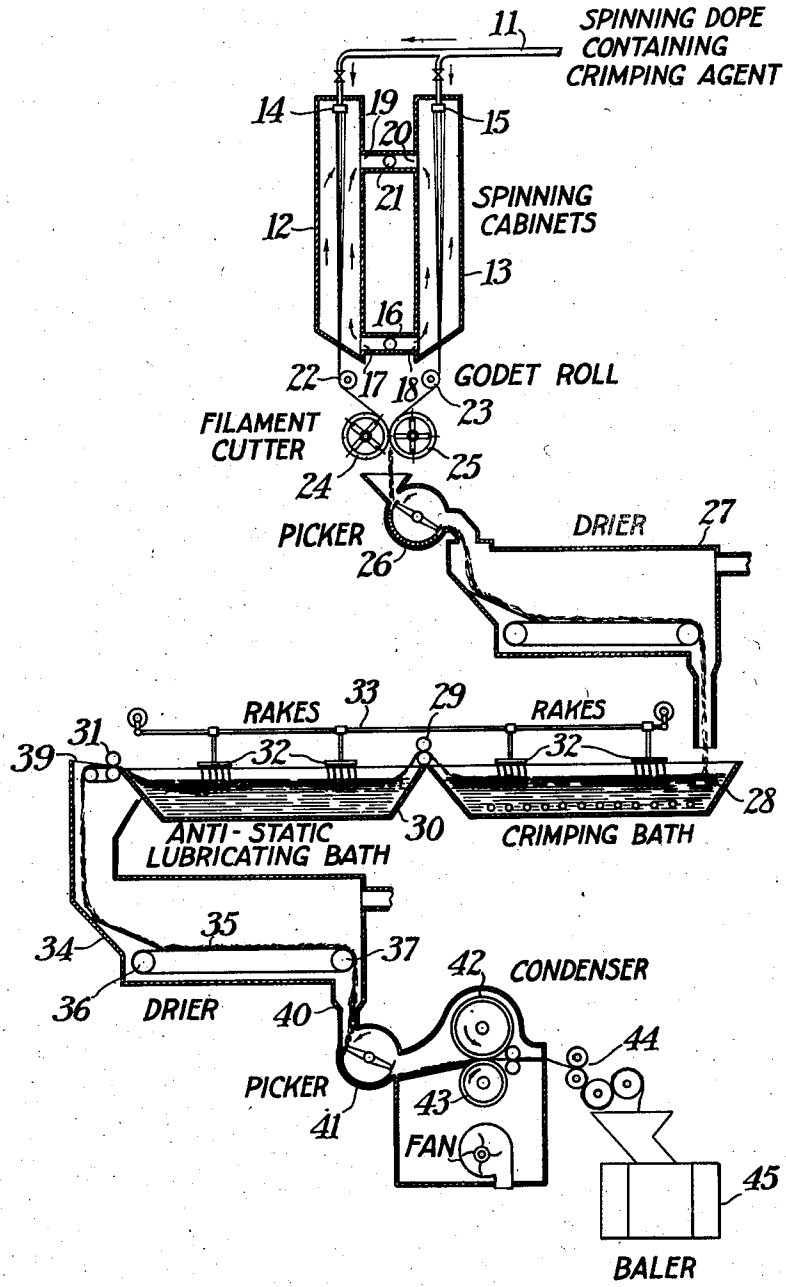

Henry R. Childs
INVENTOR.

BY W. M. Perrins
Daniel J. Mayne
ATTORNEYS

Patented Jan. 9, 1940

2,186,135

UNITED STATES PATENT OFFICE

2,186,135

CONTINUOUS PROCESS FOR THE MANUFACTURE OF CELLULOSE DERIVATIVE CUT STAPLE YARN

Henry R. Childs, Kingsport, Tenn., assignor to Eastman Kodak Company, Rochester, N. Y., a corporation of New Jersey

Application December 3, 1936, Serial No. 114,079

1 Claim. (Cl. 18—54)

This invention relates to the production of cellulose derivative cut staple fibers, and more particularly to a continuous process for the manufacture of crimped cut staple fibers closely simulating natural wool in appearance and in its ability to be processed and spun into yarn.

As is well-known, artificial filaments or fibers produced from cellulose derivatives, particularly cellulose organic derivatives such as cellulose acetate, cellulose acetate propionate, the cellulose ethers and others, have a smooth exterior surface. Natural wool fibers, on the other hand (and cotton fibers to a lesser degree) are characterized by irregularity of surface formation and cross-section and have a natural kinkiness which gives them their characteristic wooly appearance and feel and a high degree of resiliency. This kinkiness or wooliness renders such fibers especially well adapted for the manufacture of various types of yarns and fabrics, especially those which are subjected to hard wear, because of the fact that it enables them to be readily spun into strong threads by virtue of the interlocking of the individual fibers. As indicated, artificial fibers are lacking in this natural wooliness or kinkiness and therefore, as ordinarily produced, are inherently unadapted for the same uses to which natural wool and cotton fibers can be readily applied.

Workers in the artificial silk industry, recognizing these inherent defects of artificial materials, have made numerous but unsuccessful attempts to reproduce natural wool fibers, but none of the expedients thus far suggested have resulted in a practical, satisfactory wool substitute. The prior art contains numerous references to "artificial wool or cotton", "wool-like fibers", "staple fibers having a crinkled cotton-like structure", "wool substitute", and the like, but the fact remains that the art does not disclose, nor has anyone, until the advent of the present invention come forward with, an artificial staple which actually simulates natural wool and is capable of being spun or woven into fabrics closely resembling fabrics produced from the natural product.

The principal object of the present invention is to provide a continuous process of producing a new and improved type of cellulose derivative cut staple fiber closely resembling natural wool in appearance and in its ability to be spun into yarn and woven into fabrics closely resembling fabrics produced from natural wool. A further object is to provide a process wherein the various steps of forming the yarn, cutting into staple lengths, crimping, lubricating and preventing the accumulation of static charges, drying, opening, etc., are coordinated in such manner as to provide a continuous process in which a wool type staple fiber may be produced without interruption or necessity for batch handling. A still further object is to provide a continuous process which is peculiarly adapted for the production of a wool type staple from cellulose organic derivative material such as the organic acid esters of cellulose typified by cellulose acetate. Other objects will appear hereinafter.

These objects are accomplished by the following invention, which in its broader aspects comprises, as major steps, providing a cellulose organic derivative spinning dope containing a crimping agent, spinning this dope into the form of filaments, conducting the filaments through a staple cutting machine where they are cut into the desired staple lengths, treating the cut staple with a hot non-solvent fluid to bring about crimping of the staples, conveying the crimped staples through an antistatic lubricating bath, drying the staples in an atmosphere of warm air and opening the dried staples. It is particularly to be noted that my process is a continuous process in which the cellulose derivative dope is converted to filaments which travel continuously through the various steps and finally emerge in the form of a light, fluffy mass of staple fiber closely resembling natural wool, both in general appearance and in its ability to be processed on either the wool or worsted systems and spun into yarn for use in the manufacture of various types of fabrics. My process will be more fully understood by reference to the specific steps involved.

The spinning dope which I prefer to employ in the manufacture of wool type staple in accordance with my process is a triple filtered cellulose acetate dope containing a moderate amount of a crimping agent. A clear cellulose acetate dope may be prepared according to standard practice and the crimping agent added thereto, either directly or by preparing a concentrated solution of the crimping agent in the cellulose acetate dope and mixing the two solutions.

Although not confining myself to any particular type of cellulose derivative for making up the dope, I prefer to use a cellulose organic acid ester such as cellulose acetate having an acetyl content of 39 to 40 and a 4–1 viscosity of 90–100 seconds as measured by the standard dropping ball method. It is also desirable to employ a certain amount of a non-solvent such as water in the dope.

A typical dope formula well adapted for the manufacture of wool type staple fibers in accord-

ance with my invention is made up by dissolving 27.3 parts by weight of cellulose acetate (39.3 acetyl content) in a solvent mixture containing 65.7 parts by weight of acetone and 7 parts by weight of water. In accordance with the invention, to every 100 parts of this dope there is added .36 part of a crimping agent such as glycerol tributyrate. This dope is extruded in the form of filaments and these filaments are converted into staple length fibers of the wooly type in accordance with the procedure more fully set forth below.

Referring more specifically to the composition of the dope, in general accordance with my invention, it contains a crimping, crinkling or kinking agent which gives the extruded filaments the property of becoming crimped, kinky or wool-like in appearance when they are subsequently treated with a cellulose derivative non-solvent at a moderately elevated temperature. The crimping agent may be a high boiling solvent, semi-solvent, plasticizer or other addition agent for the particular cellulose derivative in question and must be a compound which, when present in the cellulose derivative filament material and acted upon by hot or boiling water or other cellulose derivative non-solvent, is capable of causing the individual fibers to assume a crimped, crinkled or kinky configuration similar to that of natural wool fibers. A wide range of substances may be employed for this purpose, among which may be mentioned glycerol tributyrate.

The general process of producing wool-like staple fibers by the use of crimping agents followed by treatment in a hot non-solvent bath is the subject of a co-pending application, Serial No. 114,078, filed of even date in which I am a co-inventor with Wallace T. Jackson and in which are set forth a considerable number of crimping agents, to which application reference is hereby made.

The spinning conditions will be controlled in accordance with the denier per filament in order to give the most satisfactory type of cellulose derivative crimped staple. The length of the staple may vary anywhere from about 2½ or 3 inches to 7 inches in length. The comparatively low denier yarn may be produced in accordance with standard spinning conditions such, for example, as those described in the Stone Patents 2,000,047 and 2,000,048. The higher denier material may be produced in general accordance with the processes outlined in the Stone patents although the speed of extrusion of the filaments should be relatively considerably lower than when producing the low denier material.

Of course, it will be understood that the particular spinning conditions will vary according to the denier of the material being produced and will range all the way from spinning speeds, inlet and outlet temperatures suitable for the production of three denier yarn to those suitable for the production of material of 30 denier or more.

The filaments as they emerge from the spinning cabinet may be lubricated and are, under the conditions of my process, in a substantially completely cured condition, that is, most of the solvent has been removed from the cellulose derivative material. For best results it is necessary to remove this residual solvent. Based on the correct spinning speeds and temperatures the filaments emerging from the cabinet will contain 5–10% of acetone. If this yarn is immediately cut and immersed in the hot crimping bath the filaments are tendered and delustered due to the presence of the solvent. If the filaments are passed through a secondary drier after leaving the cutter this residual acetone is removed (no crimp is attained in this secondary drier even though the stock is heated to at least 100° C. by air) then the hot water crimping bath does not deluster or tender the filaments. The filaments at this stage contain the majority of the crimping agent originally added to the dope.

The filaments from a number of spinning cabinets are brought together into the form of a roving and fed directly to a suitable rotary cutter or other type of staple cutting machine, such as the "guillotine" type of cutter, although for fast operation the rotary type is much to be preferred.

It is possible to feed the converged threads from a plurality of cabinets to a rotary with or without a lubricant having been applied to the filaments. If a lubricant is applied a lubricant will be selected that will not interfere with the subsequent processing such as the lubricants described in the Jackson and Faw application, Serial No. 114,077, and the Caldwell application, Serial No. 114,085, both filed of even date herewith.

We find that the condition of the cut staple as it leaves the rotary cutter is such that further processing is considerably facilitated if it is opened or fluffed followed by the drying steps above referred to.

The staples, previously picked and dried or not, depending upon the degree of crimp required, are immersed for a short time in a hot bath of a crimp-inducing agent. Hot or boiling water has been found to be one of the most satisfactory agents for this purpose, although other cellulose derivative non-solvents such as ethers and chlorinated hydrocarbons may also be used if desired. While I prefer to employ the agent in liquid form such as in a hot or boiling bath, I may under certain circumstances find it convenient to employ the crimp-inducing agent in vapor form.

The period of immersion in a boiling water bath, for example, may be about 15 minutes, although this period may vary rather widely, depending upon the particular material being dealt with, the crimping agent or agents employed, the nature of the non-solvent and other factors. The use of the non-solvent bath as a crimp-inducing agent in connection with the crimping agent per se is more fully set forth in a co-pending application, Serial No. 114,078, filed of even date, in which I am a co-inventor with Wallace T. Jackson. As stated in that application, the explanation of the production of the characteristic wool-like configuration of the fibers due to the combined action of the crimping agent and the hot non-solvent is not clear, but the fact remains that by the process herein described, I am enabled to produce a cellulose organic derivative wool type staple fiber which is in every way completely satisfactory for the manufacture of fabrics. In fact, the product produced in accordance with the procedure herein described may be employed for any of the purposes for which natural wool is now used.

As is well-known, cellulose derivative materials, particularly in filament, yarn or sheet form, are subject to the accumulation on their surfaces of charges of static electricity from frictional and other influences. This problem of static is especially serious when processing cellulose derivative cut staple fibers on the various systems for

making spun yarn. As is well-known to those skilled in the textile art, there are many complicated steps through which the staple fibers must pass in the manufacture of spun yarn on either the wool or worsted systems and in each of these steps the individual fibers tend to accumulate charges of static electricity which, unless reduced or eliminated, would make it absolutely impossible to successfully handle the material. It is therefore necessary to treat the crimped cut staple after leaving the crimp-inducing bath with a suitable antistatic agent. The crimped staple fibers may accordingly be passed into a bath containing an antistatic agent such, for example, as an amine salt of a sulphated alcohol containing at least 10 carbon atoms. Typical examples of such salts are the diethyl cyclohexylamine salts of sulphated decyl, lauryl, cetyl and myricyl alcohols. These antistatic agents and other similar compounds and the specific method of their use are not per se a part of the instant invention, but are the invention of and described in the applications of Wallace T. Jackson and Wendell G. Faw, Serial No. 114,077, and of John R. Caldwell, Serial No. 114,085, both filed of even date.

As in the case of the antistatic agents mentioned in the preceding paragraphs, the antistatic agent is conveniently applied to the yarn in the form of an aqueous emulsion in connection with sulfonated or unsulfonated animal, vegetable or mineral oils adapted for use as textile lubricants. A specific example of a satisfactory antistatic formula is as follows:

	g.
Blown neat's-foot oil	50
Sulfonated olive oil	4
Triethanolamine benzenesulfonate	4
Water	352

The treated staple fiber after passing from the antistatic lubricating bath is treated to remove the excess of lubricant by passing between squeeze rolls, by centrifuging, draining or otherwise. The material is then fed into a drier where it comes in contact with an atmosphere of warm air which serves to remove most of the remaining moisture. The dry material is then opened by a picker or equivalent device and is found to be a fluffy, wool-like material of extremely attractive appearance and so closely simulating natural wool as to be entirely capable of being employed in the manufacture of spun yarns and numerous types of textile fabrics in the same manner as natural wool is so employed.

My process will be more fully understood by reference to the single figure of the drawing which is a diagrammatic illustration of the various steps involved and typical apparatus suitable for carrying out these steps. Referring to the drawing, the numeral 11 designates a dope main 11, through which the spinning dope containing a crimping agent is supplied to a plurality of spinning cabinets 12 and 13 (usually arranged in banks and here shown in vertical section). The dope after passing through a candle filter of usual construction is extruded through spinnerettes 14 and 15 having suitable orifices to give the desired filament denier. As the filaments pass downwardly in a substantially vertical direction through the spinning cabinet they are subjected to the action of a current of heated air which enters the cabinets via manifold 16 and inlet ports 17 and 18 and leaves the cabinets at a point approximately one-third from the top thereof via outlet conduits 19 and 20, respectively, and manifold 21.

The filaments upon emerging from the cabinet pass around godet rolls 22 and 23 and thence to the filament cutter. The filaments may be lubricated between the cabinet and the godet roll, as is customary.

The filaments from a number of cabinets 12 and 13, for instance 100 to 300 cabinets, are brought together after leaving the godet rolls 22 and 23 and the roving thereby formed is drawn into the pinch of rubber-covered rotary cutting rolls 24 and 25, each of which is cylindrical in character and provided with cutting knives which protrude radially from the center of the cylinder in a known manner. The filament is cut in such manner that there is a continuous feed from the source of filament supply, the staples in the desired length simply falling by gravity from between the rolls, into the spout of picker 26, which fluffs the staple and discharges it into drier 27 through which the staple is conducted by a conveyor and discharged into the crimping bath.

The crimp-inducing liquid may be contained in an appropriate vessel 28 provided with a steam coil or other appropriate heating means as shown. The bath as previously indicated, may be hot or boiling water or other non-solvent for the cellulose organic derivative filament material. For convenience of reference and to avoid encumbering the disclosure with a conveying and handling apparatus of more or less conventional design and operation, the passage of the staple material through the various steps of the process after leaving the cutting operation are indicated by a continuous line. The vessel 28 is of such length that with the speed of travel of the filaments from the cabinet and the size of the roving, the period of immersion in the crimp-inducing bath is adequate, such as 15 to 30 minutes.

After the crimping bath has been permitted to act upon the cellulose derivative filaments to induce the characteristic wool-like crimp therein, the staples are conducted through squeeze rolls such as rolls 29 to remove excess non-solvent after which the staple material is conducted into the antistatic lubricating bath which is contained in an appropriate vessel 30. The anti-static bath is, as set forth above, conveniently an aqueous emulsion of the antistatic agent per se and a textile lubricant. After remaining in this bath for a sufficient length of time, say for 15 min., to take up the desired amount of the antistatic agent and lubricant, the material is then treated to remove the excess of the antistatic lubricant as by passing between squeeze rolls 31 or equivalent means so as to leave approximately ½ to 5% of the antistatic agent on the staple. Rakes 32 mounted upon reciprocating arm 33 propel the staple fiber through the crimping bath tank and the antistatic bath tank.

The crimped lubricated staple material is then passed directly (by the rolls 31) to a conventional type of drying apparatus such as that designated by the numeral 34. This drying device is appropriately provided with a belt conveyor 35, operated by driven rolls 36 and 37, like the drier 27. The device is also provided with a source of heated air, such as an inlet conduit 38, through which the air passes into the interior of the device and out through the feed opening 39 or other convenient outlet.

The moist staple in passing through the device in the indicated direction is dried, finally passing out of the drier via conduit 40 to a conventional form of picker 41, where the material is opened and the individual staple fibers largely separated

one from another. If desired, the material may then pass in the form of a web between rolls 42 and 43 to a condenser 44 also of conventional design, thence to the baler 45.

It will, of course, be evident that many changes in the individual steps of my process may be made within the scope of my invention. For example, many types and compositions of spinning dopes may be employed and many different types of crimping agents and crimp-inducing agents (non-solvents) may be employed. Likewise, the filament-forming conditions may vary widely, depending upon the particular type of staple being produced. Similarly, the composition of the anti-static bath may vary, the temperatures of all the different baths and time of immersion may also be varied to suit specific requirements.

It may be pointed out that the invention herein described has required far more than the mere assembly of miscellaneous equipment. It will be apparent that staple fiber of this character is very difficult to handle because of its propensity to accumulate static and because of its light fluffy character. Various safeguards to loss of material, matting of the material, etc. had to be provided by proper design or selection of the equipment in order to obtain uniform movement of the fiber through the process and uniform treatment of the fiber. Thus my continuous process lends itself to uniform economical production of wool staple which would not be possible by a batch process.

Another distinct and unusual advantage of my continuous process is the intimacy of the blending of filaments which may be accomplished. It is my intention to use staple mixtures such as the following, containing 15% 15 denier, 25% 8 denier and 60% 5 denier. To accomplish this I may equip a certain percentage of the cabinets with jets capable of producing 15 denier, also on the same machine equip a certain per cent of cabinets with jets capable of producing 8 denier and also on the same machine equip a certain per cent of the cabinets with jets capable of producing 5 denier. The continuous threads from all of these are then drawn to the rotary cutter. Thus each cutting of the roving is composed of the proper blend of fibers desired in the finished product. This blend proceeds through the entire process into the finished product in a perfectly uniform fashion. Thus when the product is later carded and processed on textile equipment to produce yarns the usual blending operation of the fibers before carding (which at best does not give a uniform product) is unnecessary.

It will thus be seen that I have provided a practical and highly efficient process of producing wool-like cellulose organic derivative cut staple fibers, which fibers are capable of use in practically all of the relationships in which natural wool is now employed. In other words, I have provided a process in which one may start with the cellulose derivative spinning solution and progress continuously, consistently, directly and uniformly to the final wool-type staple product.

The broad scope of my invention includes the use as the filament material of any cellulose organic derivative material normally adapted for the manufacture of synthetic yarn. However, I prefer particularly to employ the single or mixed organic derivatives of cellulose, particularly the cellulose organic acid esters such as cellulose acetate, cellulose acetate propionate, cellulose acetate butyrate and the like, I may also employ certain of the cellulose ethers such as ethyl and methyl celluloses.

I claim:

The continuous process of producing a uniform blend of cellulose organic derivative cut staple fibers containing a plurality of deniers of fibers all having crimped, kinky and woolly appearance and a resiliency and other physical characteristics closely simulating natural wool, which comprises extruding in the form of filaments a cellulose organic derivative dope containing a crimping agent selected from the group consisting of high boiling solvents, semi-solvents and plasticizers, through a plurality of spinnerettes, a given one of which is adapted to produce filaments of different denier from the others, removing solvent from the filaments, cutting them into staple lengths, drying the staple fibers to remove traces of residual solvent, treating the fibers first in a crimp-inducing bath composed of a cellulose derivative non-solvent selected from the group consisting of water, ethers and chlorinated hydrocarbons, while the fibers are in an open, heterogeneously disposed condition and then in an anti-static bath containing an anti-static agent selected from the group consisting of the amine salts of sulphated aliphatic alcohols containing at least 10 carbon atoms and the salts formed by the interaction of an organic base selected from the group consisting of the alkylamines, the substituted alkylamines, the alicyclic amines, the alkylolamines, and the amines containing an ether linkage, with a compound selected from the group consisting of the aromatic sulfonic acids, the organic acids containing a cyclic ether residue and the organic acids containing an open chain ether residue, and thereafter drying the crimped staple product.

HENRY R. CHILDS.