(19) Europäisches Patentamt
European Patent Office
Office européen des brevets

(11) Publication number: **0 330 014 A1**

(12) EUROPEAN PATENT APPLICATION

(21) Application number: **89102193.3**

(51) Int. Cl.4: **A47K 3/22**

(22) Date of filing: **09.02.89**

(30) Priority: **26.02.88 IT 334988**

(43) Date of publication of application:
30.08.89 Bulletin 89/35

(84) Designated Contracting States:
AT BE CH DE ES FR GB GR IT LI LU NL SE

(71) Applicant: **FALPER S.r.l.**
Via Veneto 7/9
I-40064 Ozzano Emilia (Bologna)(IT)

(72) Inventor: **Fallavena, Guido**
Via Piave 11
S. Lazzaro di Savena (Bologna)(IT)

(74) Representative: **Modiano, Guido et al**
MODIANO, JOSIF, PISANTY & STAUB
Modiano & Associati Via Meravigli, 16
I-20123 Milan(IT)

(54) Movable shower screen for bathtubs.

(57) The movable shower screen comprises a tubular bracket (17) curved in the shape of a U with its parallel arms (14, 15) associated with means (8a, 8b) for its articulation respectively to the wall (4) above the bathtub and along an edge of a low-weight rigid panel (6) which is downwardly provided with means (7c) for supporting and engaging on the outer rim of the bathtub.

FIG. 2

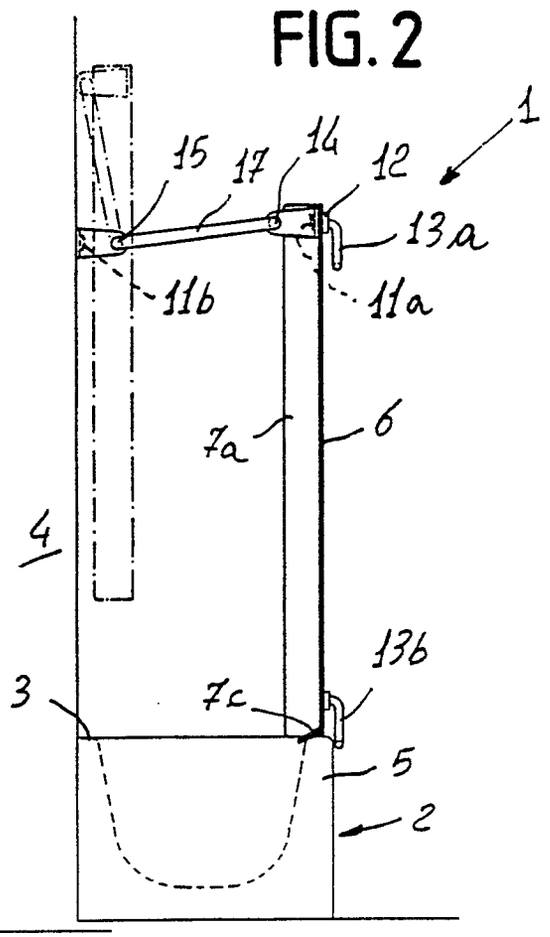

EP 0 330 014 A1

MOVABLE SHOWER SCREEN FOR BATHTUBS

The present invention relates to a movable shower screen, mountable on a bathtub.

The particular field requires structures which, besides being practical and quick to operate, have small dimensions and modest costs, are rapid to assemble and have a reliable, sturdy and compact structure.

The structures currently commercially available do not feature the abovesaid characteristics simultaneously, since either they have fixed rigid panels which are extremely impractical and prevent access to a part of the bathtub, or they are slidable along the outer rim of said bathtub, with hardly negligible installation costs and with guiding profiled elements sealingly fixed to the rim of the bath tub; other kinds of screens are made of one or more parts pivoted to the wall and to one another along vertical axes and have hinges which wear out and break down in a short time so that said panels tend to inappropriately lean outwards.

The technical aim of the present invention is to obviate the above described disadvantages, i.e. to provide a bathtub mountable movable shower screen which does not affect the space of said bathtub when not in use, is extremely practical and reliable in operation and has a relatively modest cost.

Within the scope of this technical aim, an object of the present invention is to achieve the above described aim with a simple structure which is relatively easy to produce, is reliable and effective in use and has a relatively modest cost.

This aim and this object are achieved by a movable shower screen for bathtubs characterized in that it comprises a bracket having substantially a U shape and having its parallel arms associated with means for articulating respectively to the wall above the bathtub and along an edge of a panel which is downwardly provided with means for supporting and engaging on the outer rim of the bathtub, the panel being manually movable from a use position in which it is spaced from the wall, with the support means engaged on the bathtub, to a rest position in which it is adjacent to the wall.

Further characteristics and advantages of the invention will become apparent from the detailed description of a preferred but not exclusive embodiment of a bathtub mountable movable shower screen according to the invention, illustrated only by way of non limitative example in the accompanying drawings, wherein:

figure 1 is an exploded isometric view of a bathtub mountable movable shower screen according to the invention;

figure 2 is a schematic lateral view of a movable screen mounted on a bathtub;

figure 3 is a plan view of figure 2;

figure 4 is a detail view of the articulation of the bracket to the wall.

figure 5 is a vertical sectional view of an embodiment of the movable screen according to the invention;

figure 6 is an isometric detail view of the articulation of the bracket to the panel, in resting position, according to the embodiment of figure 5;

figure 7 is an exploded isometric view of a detail of the supporting means of the panel according to the embodiment of figure 5.

With particular reference to the above described figures, the reference numeral 1 indicates the movable shower screen according to the invention, which can be mounted on a bathtub 2 which has a rim 3 adjacent to a wall 4 and an outer rim 5. The screen 1 comprises a rigid panel 6 which is advantageously made of a material such as plastics: the panel advantageously has stiffening ribs which make it self-supporting; along its sides and base the panel has respective inwardly directed 45 degree folds 7a, 7b and 7c which are adapted to convey water towards the inside of the bathtub; the lower one 7c also defines a support for the panel against the rim of the bathtub.

Two substantially U shaped fork-like brackets 8a are upwardly fixed to the panel and their parallel faces are affected by opposite mutually aligned holes 9: the other intermediate face of the fork-like brackets 8a is traversed by respective holes 10 for the passage of coupling screws 11a; the screws 11a screw into respective washers or in end portions 12 of a shaped tube 13a which is curved downwards to define a sort of handle.

Two fork-like brackets 8b, similar to the previously described ones, are fixed to the wall 4 by screws 11b so that the holes 9 are mutually coaxial: the parallel arms 14, 15 of a bracket 16 are rotatably inserted in the holes 9 of the fork-like brackets 8a, 8b; the bracket 16 is curved in the shape of a U, and its intermediate arm 17 moves in a vertical plane which is orthogonal to the middle axis of the bathtub.

The metal sheet of the fork-like brackets 8b has inward folds 18 against which screws 19 can abut; said screws are screwed into radial holes provided in the arm 15 and act as stroke limit for the downward rotation of the bracket.

A tube 13b, similar to the previously described tube 13a fixed at the top of the panel, can be fixed to the lower region of the panel by means of bolts

which traverse the panel and related washers; the downward fold 7c of the panel and the handle 13b are suitable to embrace the rim of the bathtub from above and to constitute supporting and coupling means.

The panel can have two positions of stable equilibrium, a rest position and a use position, and can be moved manually from one position to the other; in its rest position the panel is raised and rests against the wall, as illustrated in broken lines in figure 2, while in its use position it rests with its lower portion on the rim 5 of the bathtub.

The fork-like brackets 8 have a certain length so that between the axis of the holes 9 and the intermediate face which rests against the wall or against the panel there is such a distance as to ensure that the panel is in stable equilibrium in its raised position.

The stroke limit defined by the fold 18 and by the screw 19 prevents the panel from causing damage or being damaged by falling if it slips from the user's grasp.

In order to reduce the lifting effort it is possible to apply springs (metallic ones, gas operated ones or the like) adapted to counterbias the weight of the structure.

Because of the elevated position of the bracket 16 there is no interference in gaining access to the bathtub, and similarly there is no interference with any taps protruding from the wall because the lower edge of the panel rises and moves away upwards, in its rest position.

The uppermost handle 13 can be used, when the panel is in its use condition, to place towels or the like so that they are sheltered from water sprays.

In the embodiment illustrated in figures 5, 6 and 7, the bracket 16 is articulated to the wall 4 and to the panel 6 by means of respective pairs of hinges 20a, 20b functionally corresponding to the previously described U-shaped brackets 8a, 8b.

The hinges 20a, 20b, preferably made of plastics by molding, are substantially constituted by a sleeve 21 defined at the end of a U-shaped body; the arms 14, 15 of the bracket engage in the sleeves of the hinges 20a, 20b.

The parallel faces of the hinge body are respectively defined by pairs of walls 22a perpendicular to the axis of the sleeve 21 and joined by a related bottom 22b. The bottom face 22c of said body is crossed by holes 23 for screwing coupling screws 24. The panel 6 conveniently has a shaping 6a at the fixing region of the hinges 20a.

A longitudinal expansion 26 is defined on the outside of the sleeve 21 and forms a sort of beak along its upper edge. The beak 26a is adapted to engage a tooth 27 defined by a mounting 28 provided with a pair of holes 29 for appropriate mounting screws. The mounting 28 can be fixed to the wall above the hinges 20b so as to lock the panel 6 in resting position, raised and resting against said wall.

The tooth 27 is adapted to insert in an upper slot 30a of the sleeve 21 which is provided in an intermediate position between the two pairs of walls 22a of the hinge body; the profile of the tooth 27 is rounded so as to engage with the profile of the arm 14 of the bracket 16 which can be accessed through said slot. The sleeve 21 has a further slot 30b at a position diametrically opposite to the slot 30a; in the case of the hinges 20b, the slot 30b defines the stroke limit for the rotation of the bracket 16 between said working and resting positions by engaging with the screw 19 screwed in the arm 15.

The fact is stressed that a single type of hinge allows to articulate the bracket 16 both to the wall 4 and to the panel 6.

A pair of handles 31 can be fixed to the lower region of the panel; said handles are intended to also act as means for supporting and engaging on the edge of the bath tub. The handles 31 are substantially U-shaped and are arranged vertically in assembly position.

The handles 31 downwardly define divaricated portions 31a and 31b adapted to embrace the edge of the bathtub. The portion 31a is shaped complementarily to a lower fold of the panel, indicated by 7d for the sake of clarity, which substantially follows the inner profile of the bathtub rim; the portion 31a engages with a hook 32 in a recess 33 of said fold.

The upper portion 31c of the handles is frontally provided with a pair of holes 34 in which related fixing screws 35 are screwed. The screws 35 traverse corresponding holes 36 provided on the panel at a shaping 6b.

A preferred mounting condition has been illustrated, with the arms of the bracket arranged horizontally; in any case the arms may also be vertical and the panel may therefore be horizontally movable from a configuration in which it is adjacent to the wall to a configuration in which its lower edge rests on the rim of the bathtub: in this condition there must be no taps interfering with the panel in its rest configuration.

It has thus been observed that the screen achieves the intended aim and object.

The invention thus conceived is susceptible to numerous modifications and variations, all of which are within the scope of the inventive concept.

Furthermore all the details may be replaced with other technically equivalent elements.

In practice, the materials employed, as well as the shapes and dimensions, may be any according to the requirements without thereby abandoning the

scope of the protection of the following claims.

Where technical features mentioned in any claim are followed by reference signs, those reference signs have been included for the sole purpose of increasing the intelligibiblity of the claims and accordingly such reference signs do not have any limiting effect on the scope of each element identified by way of example by such reference signs.

Claims

1. Movable shower screen for bathtubs, characterized in that it comprises a bracket (17) having substantially a U shape and having its parallel arms associated with means (8a, 8b, 20a, 20b) for articulating respectively to the wall (4) above the bathtub and along an edge of a panel (6) which is downwardly provided with means (7c) for supporting and engaging on the outer rim (5) of the bathtub, the panel being manually movable from a use position in which it is spaced from the wall, with the support means engaged on the bathtub, to a rest position in which it is adjacent to the wall.

2. Screen according to claim 1, characterized in that said parallel arms (14, 15) are horizontal and are articulated along the upper edge of the panel, the rest position being raised relatively to the use position.

3. Screen according to claim 1, characterized in that said articulation means (8a, 8b, 20a, 20b) have their articulation axes spaced respectively from the plane of the wall and from the plane of the movable screen to determine a stable rest condition.

4. Screen according to claim 1, characterized in that said articulation means are constituted by U-shaped fork-like brackets (8a, 8b) having their parallel faces traversed by holes (9) for articulating to the arms (14, 15) of the U-shaped elements and their other face traversed by a hole (10) to fix them to the wall or to the panel.

5. Screen according to claim 3, characterized in that on the outside of the panel (6) said articulation means are mutually associated by a handle (13), a handle (13b) being also mounted at the base of the panel to act as support element against the bathtub.

6. Screen according to claim 1, characterized in that said articulation means are constituted by hinges (20a, 20b) defining a sleeve (21) in which the arms of said tubular bracket respectively engage, said sleeve externally defining a longitudinal expansion (26) for coupling to a mounting (28) which can be fixed to the wall.

7. Screen according to claim 6, characterized in that said expansion (26) forms a sort of beak (26a) along its upper edge, said beak being adapted to engage a tooth (27) defined by said mounting (28) and intended to insert in an upper slot (30a) of said sleeve.

8. Screen according to claim 1, characterized in that said supporting and engagement means are constituted by U-shaped handles (31) applied vertically to said panel, said handles downwardly defining divaricated portions (31a, 31b) adapted to embrace the rim of the bathtub.

9. Screen according to claim 8, characterized in that one (31a) of said divaricated portions of the handle (31) is shaped complementarily to a lower fold (7a) of the panel which substantially follows the inner profile of the bathtub rim and defines, at one end, a hook (32) adapted to engage with said fold.

FIG. 4

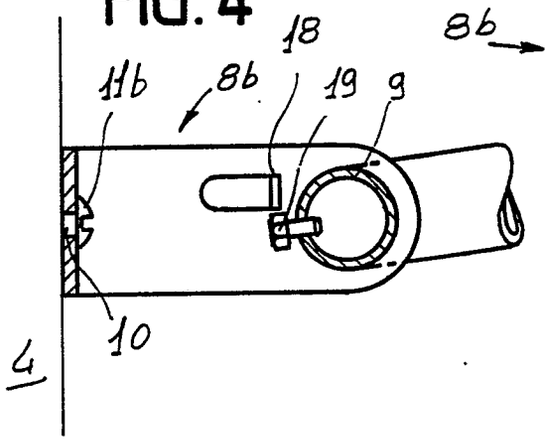

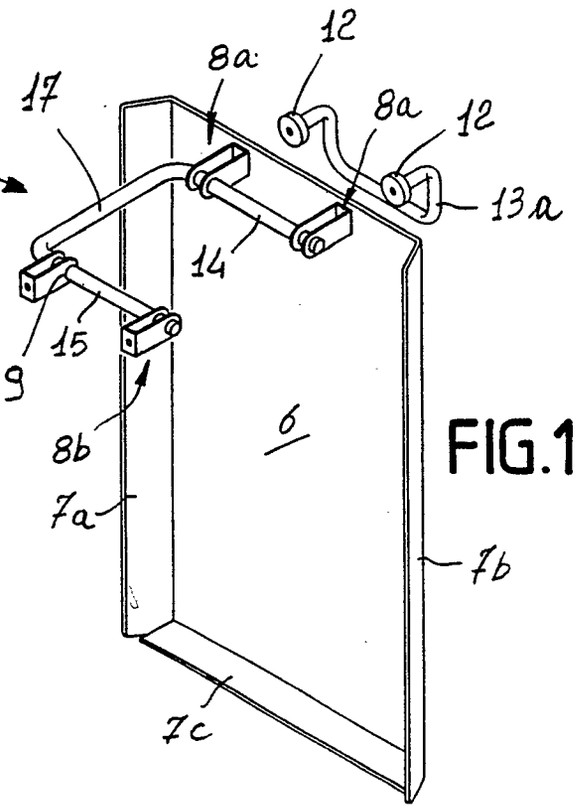

FIG. 1

FIG. 2

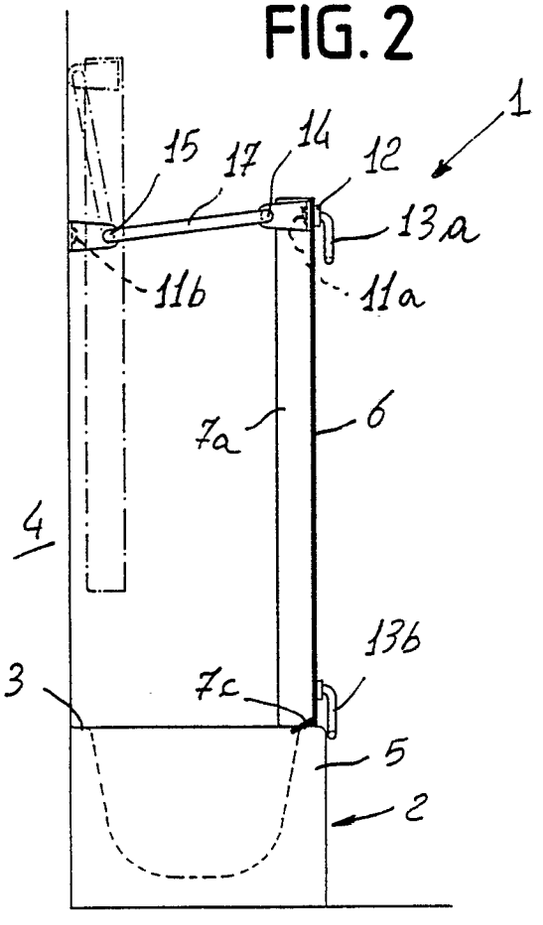

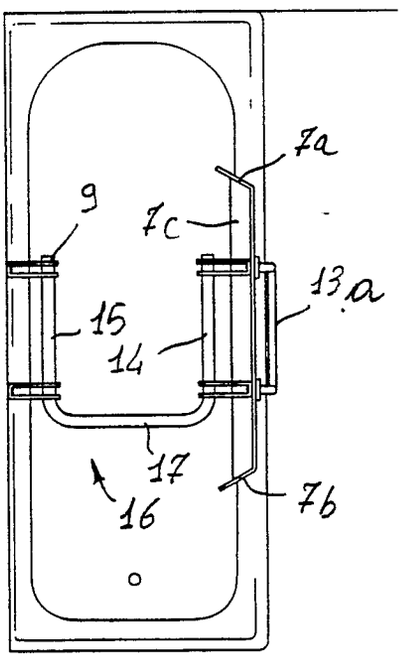

FIG. 3

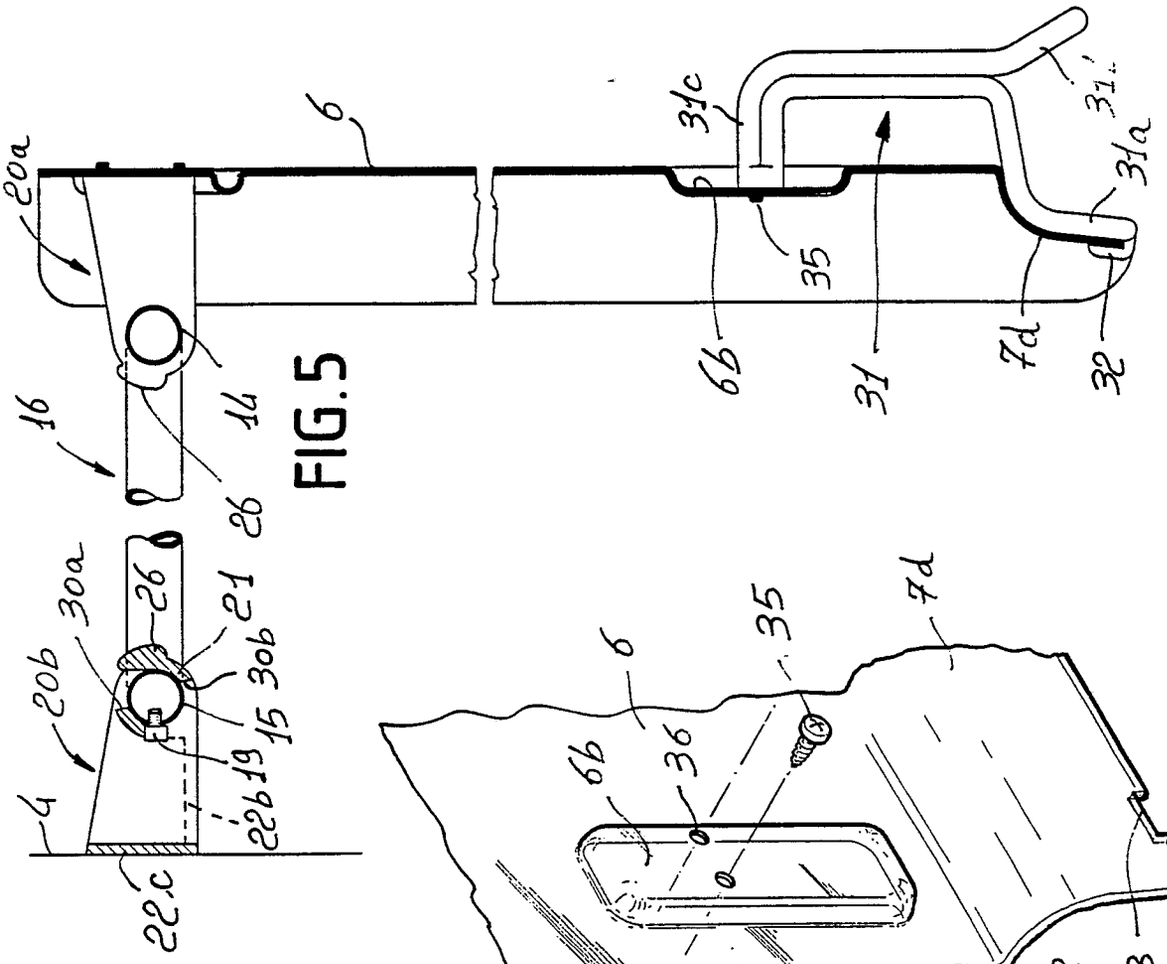
20a
6
31c
31'
31a
16
14
26
35
66
31
7d
32
FIG.5
20b
30a
26
21
30b
15
19
22b
4
22c

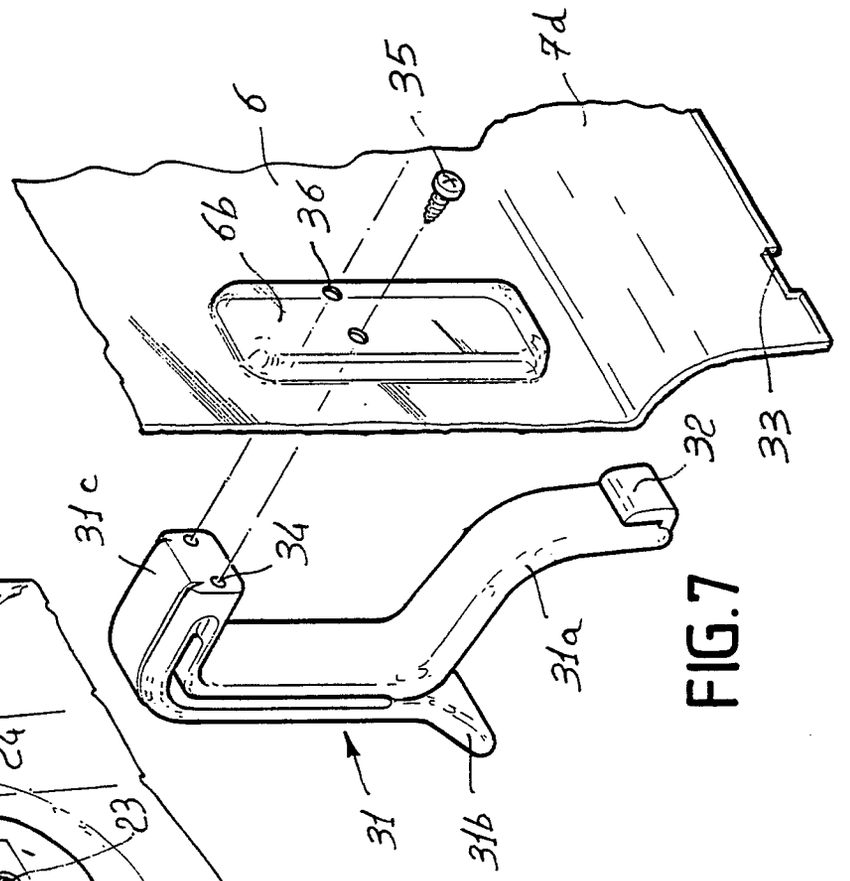
6
35
7d
66
36
33
32
31c
34
31a
31
31b

FIG.7

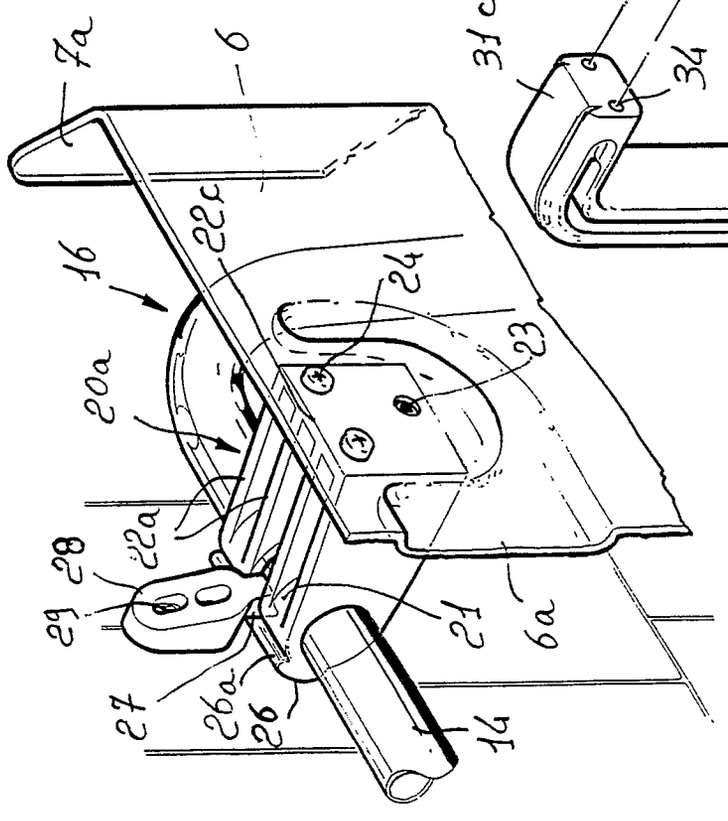
7a
6
22c
16
24
20a
23
22a
28
29
21
6a
27
26a
26
14

FIG.6

European Patent Office

EUROPEAN SEARCH REPORT

Application Number

EP 89 10 2193

DOCUMENTS CONSIDERED TO BE RELEVANT

Category	Citation of document with indication, where appropriate, of relevant passages	Relevant to claim	CLASSIFICATION OF THE APPLICATION (Int. Cl.4)
X	GB-A-2 079 595 (STEVENS) * Page 1, lines 59-130; page 2, lines 1-31; figures 1-8 *	1	A 47 K 3/22
A		2,3,4	
A	GB-A- 889 004 (McCREADIES) * Page 1, lines 49-58; figure *	8	
A	US-A-3 869 734 (BOLT)		
A	DE-A-2 019 097 (BOLT)		

TECHNICAL FIELDS SEARCHED (Int. Cl.4)

A 47 K
A 47 K

The present search report has been drawn up for all claims

Place of search	Date of completion of the search	Examiner
THE HAGUE	12-04-1989	SCHOLS W.L.H.

CATEGORY OF CITED DOCUMENTS

X : particularly relevant if taken alone
Y : particularly relevant if combined with another document of the same category
A : technological background
O : non-written disclosure
P : intermediate document

T : theory or principle underlying the invention
E : earlier patent document, but published on, or after the filing date
D : document cited in the application
L : document cited for other reasons

& : member of the same patent family, corresponding document

EPO FORM 1503 03.82 (P0401)