March 22, 1938. F. G. KIRBY 2,112,028

PHOTOGRAPHIC APPARATUS

Filed July 31, 1934

FIG.1.

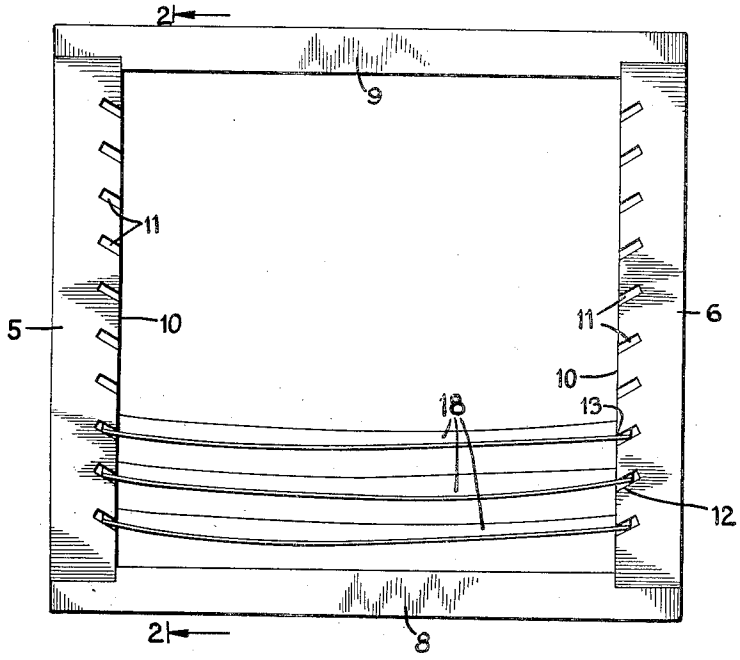

FIG.2.

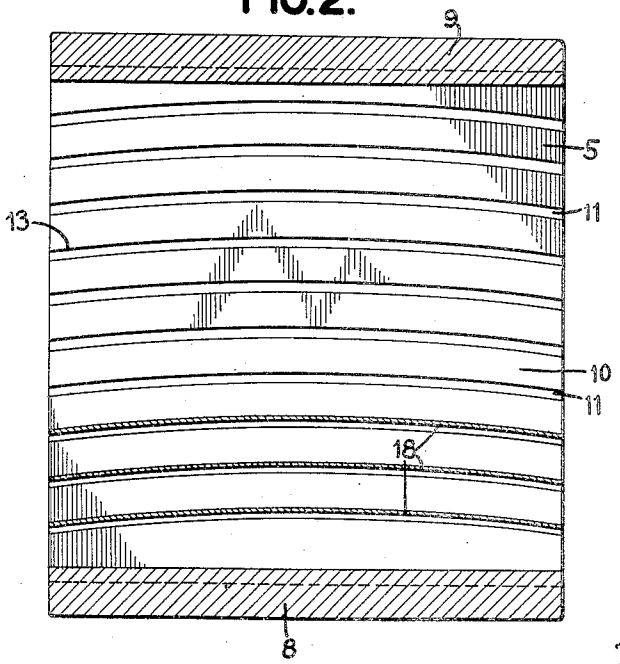

FIG.3.

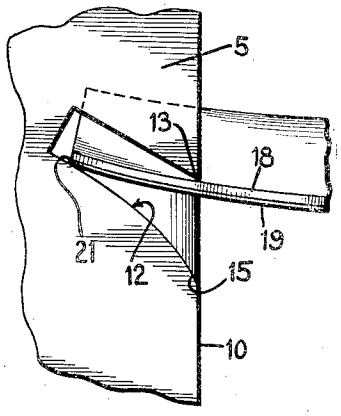

INVENTOR
FRANK G. KIRBY

BY Frederick Griswold Jr.
ATTORNEY

Patented Mar. 22, 1938 2,112,028

UNITED STATES PATENT OFFICE

2,112,028

PHOTOGRAPHIC APPARATUS

Frank G. Kirby, Long Island City, N. Y.

Application July 31, 1934, Serial No. 737,693

6 Claims. (Cl. 34—26)

This invention relates to photographic apparatus and more particularly to a holder for flexible, sensitized, photographic material, such, for example, as flexible, photographic prints and/or films and the method of treating such material.

Such prints and films bear an emulsion upon one side and should lie flat when dried and show the background of the picture to the very edge, that is, be without an undeveloped margin. At the present time, photographic prints and particularly those on so-called "mat paper" require drying between blotters, canvas or on other drying apparatus requiring individual handling of the prints in a wet stage. They must then be passed through a "straightening machine" before the print is too dry. Without these steps, the prints will not be flat. Moreover, if the print is passed through the straightening machine after it has become too dry, the emulsion face is likely to crack in straightening the sheet. Commercially, prints of this character are made in large quantities, at central establishments, for other photographers and the margin of profit is small. When it is considered that the developing, fixing, washing and drying of these prints can now only be done successfully by hand operations, one print at a time, it will be readily appreciated that a simple device by which individual handling of the prints can be avoided, fills a long felt want.

One object of the present invention is a sheet holding device which will support the photographic material at its edges only and from which it need not be removed until all the steps of developing, fixing, washing and drying are performed. Preferably, a plurality of such sheets of material are carried in a single holding device.

Another object of the invention is a device of the character described which shall permit the emulsion to be developed to the very edge of the sheet.

Still another object of the invention is a rack which will hold the print or film in such fashion that when dry, it will have a tendency to remain flat.

In carrying the invention into effect, a frame of suitable construction is provided, in opposed wall surfaces of which grooves are formed whereby the sheets of photographic material are carried parallel to one another, in spaced relation. The prints or films are engaged at their edges in such fashion that the developing, fixing, washing and drying fluids may contact with every portion of the surface of the emulsion, while at the same time the sheet is so curved, both transversely and longitudinally, that the emulsion side of the sheet tends, upon drying, to assume a convex form and, therefore, the sheet tends to lie flat and not curl into a concave form.

These and other objects of the invention and the means for their attainment will be more apparent from the following detailed description, taken in connection with the accompanying drawing illustrating one embodiment by which the invention may be realized, and in which:

Figure 1 is a view showing the device of this invention with several sheets of photographic material in place;

Figure 2 is a transverse sectional view taken in the plane indicated by the line 2—2 in Figure 1, looking in the direction of the arrows; and

Figure 3 is a detail view, on an enlarged scale showing a modified groove by which the sheet of photographic material is supported at its edge.

In the illustrated embodiment, the device of this invention takes the form of a rack or frame of such length and breadth as to suitably receive photographic sheet material of a predetermined size and shape. It is shown as rectangular in cross section.

The rack or frame of this invention preferably comprises two opposed parallel walls **5** and **6**, suitably connected in spaced and parallel relation by a plurality of transverse connecting and/or spacing members **8** and **9**. Any convenient handles, not shown, may be attached to the rack to facilitate the handling thereof. The rack members are preferably made of some material not affected by the solutions used in developing the print, such as molded hard rubber. The inner or opposing faces of the walls **5** and **6** are formed with grooves **11**. These grooves extend inwardly and upwardly in the walls and are so disposed that each slot in one wall has a companion groove in the other wall and corresponding points on each pair of grooves lie in the same one of a plurality of parallel planes. In the preferred embodiment, these grooves are curved in the direction of length, as shown in Figure 2, so that a sheet of material extending between a pair of slots will be convex upwardly and the upper edge **13** of each slot is sharp as viewed in Figure 3, so that a plane surface, such as the sheet of material, in contact therewith will have only a line contact. The tendency of the sheet to bow upwardly, by reason of the curvature of the groove, causes its central portion to press upwardly against the central portion of the upper

edge 13 and thus displacement of the sheet longitudinally of the grooves 11 is prevented.

It is practically impossible to obtain a sheet of photographic material which is absolutely flat after drying, without the use of straightening rollers and even then it is very difficult. In accordance with one aspect of this invention, it is contemplated that the photographic print, when dry, shall have a slightly concave shape in the vertical direction (as the photograph is viewed) and, at the same time, will have a convex shape transversely thereof to counteract the normal tendency of the emulsion to assume a concave shape in drying.

Exposed photographic material is generally rectangular and in sheet-like form. The sheet of photographic material 18 is placed in a groove of the rack with its emulsion side 19 (Figure 3) on the convex side and with its vertical axis as viewed extending in the longitudinal direction of the groove 11. In order to cause the sheet to assume a convex shape transversely, (considering the emulsion side) the walls are so proportioned that the side edges 21 of the sheet when placed in the grooves in contact with the surface 12, lie above the edge 13 whereby the edge 13 being offset from the point of contact with the lower wall 12 thus causes the sheet to curve downwardly, as shown in Figures 1 and 3, it being slightly below the point of contact of the edge 21 with the lower surface 12. The lower surface 12 may be straight so long as this condition obtains, as seen in Figure 1, but, preferably, is curved. The lower corner of each groove formed by the line of intersection of the surface 10 of the walls 6 and 8 and the bottom 12 of the groove is rounded off or curved instead of sharp, as shown clearly in Figure 3 at 15. Thus only a line contact takes place with the edge 21 and the developing, fixing, washing and drying may come in contact with the entire emulsion surface and no undeveloped surface resulting in a white border is produced.

In view of the fact that the grooves extend inwardly and upwardly at an angle and of greater depth than width, so that the point of support of the edge 21 is above the point of contact of the groove edge 13, the emulsion surface of the photographic sheet is held in a convex shape and as the sheet is gripped at each end in a two point support, lateral displacement is prevented.

It will thus be seen that a rack for emulsion bearing sheets of photographic material has been provided in which the sheets may be supported without separate handling during the steps of developing, fixing, washing and drying and that the sheets so handled will be developed to the very edge, all around and will dry without curling and lie in a manner to be desired.

Various modifications will occur to those skilled in the art in the configuration, composition and disposition of the component elements going to make up the invention as a whole so long as the object of full exposure of the emulsion coated surface of the photographic sheet through necessary fluids, either liquid or gaseous, is provided as well as the use to which the invention may be put, and no limitation is intended by the phraseology of the foreging description or illustrations in the accompanying drawing, except as indicated in the appended claims.

What is claimed is:—

1. A holder for flexible photographic sheet-like material comprising a pair of parallel side members formed with opposed grooves, each extending upwardly and inwardly and of greater depth than width, the parallel walls of which are curved.

2. A holder for flexible photographic sheet-like material comprising a pair of parallel side members formed with opposed companion grooves extending upwardly and inwardly, one surface of each groove being curvilinear.

3. A holder for flexible photographic sheet-like material comprising a pair of parallel side members formed with opposed upwardly and inwardly extending grooves, one surface of said groove being curvilinear and said groove being curved in the direction of length.

4. In a device of the class described, the combination of a pair of upstanding spaced parallel walls, each provided on the inner side facing the other with a slot extending substantially in a horizontal direction, said slots being substantially at the same horizontal level and coacting to receive opposite edges of a sheet of material suspended thereby between the walls, each slot extending at an angle upwardly and inwardly from the associated inner side of its containing wall and curving slightly in an upwardly extending arc in the direction of its length.

5. In a device of the class described, the combination of a pair of parallel walls, each provided with an upwardly directed slot, the open ends of the slots facing each other coacting to support therein opposite edge of a sheet of slightly flexible material, each slot being arched slightly lengthwise, and each slot outlined on its underside by an upwardly inclined surface facing the open end of its associated slot and adapted to receive and bend upwardly the edge of the sheet as it is intruded into the same.

6. In a device of the class described, the combination of a pair of upstanding spaced parallel walls, each provided on the inner side facing the other with a slot extending substantially in a horizontal direction, said slots being substantially at the same horizontal level and coacting to receive opposite edges of a sheet of material suspended thereby between the walls, each slot extending at an angle upwardly and inwardly from the associated inner side of its containing wall for a distance such that the lower inner corner of said slot lies in a horizontal plane above the horizontal plane including the edge defined by the associated inner side of its said containing wall and the intersection of the upper surface of said slot to bend upwardly the edge portion of the sheet as it is intruded into the same.

FRANK G. KIRBY.