2 Sheets—Sheet 1.

A. TROWBRIDGE, Jr.

ORGAN STOP-ACTIONS.

No. 194,017. Patented Aug. 7, 1877.

Fig 1.

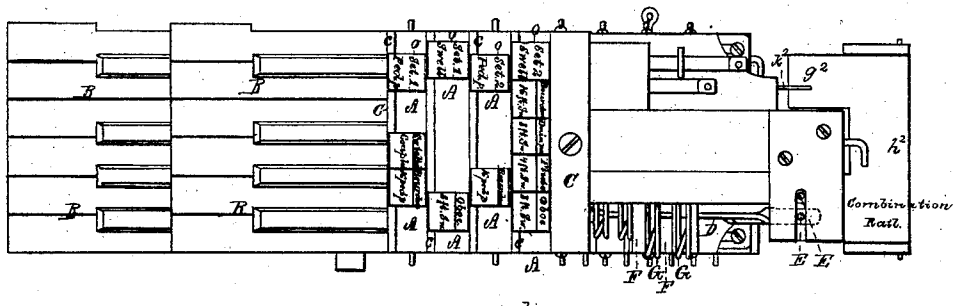

Fig. 2.

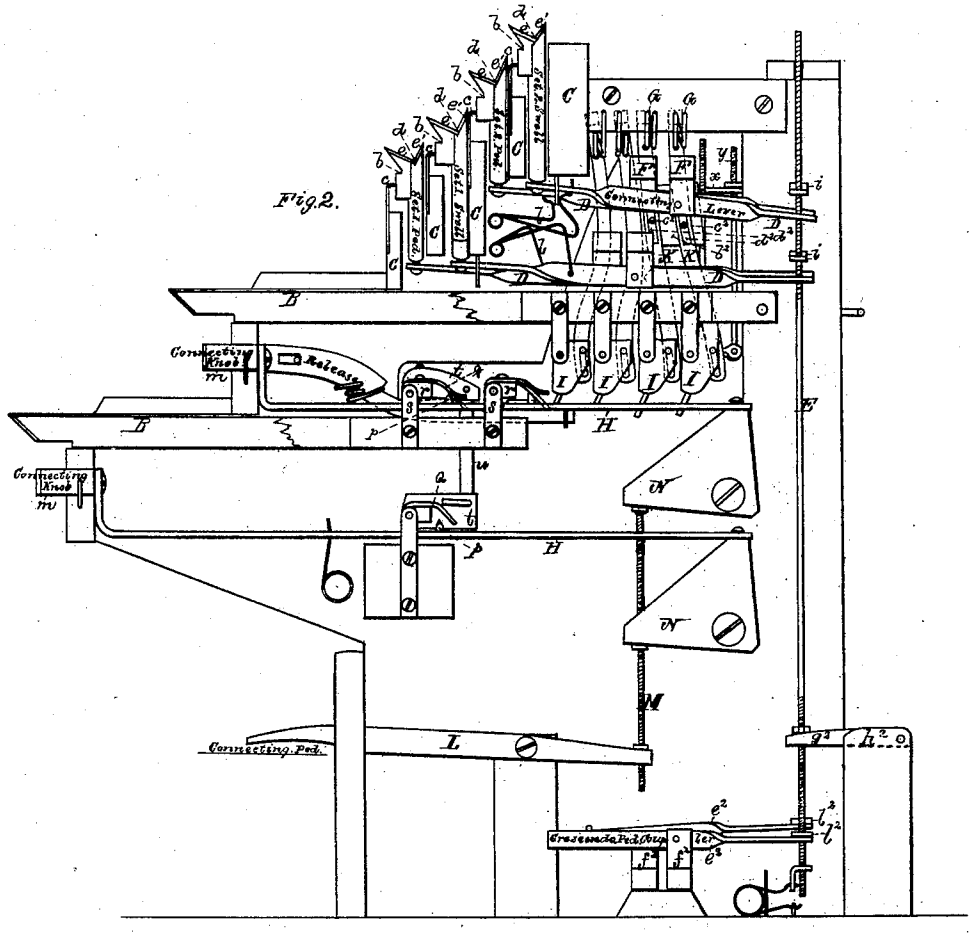

Witnesses.

S. N. Piper.

L. W. Müller.

Inventor

Almarin Trowbridge, jr.

by his attorney.

R. H. Eddy

N. PETERS, PHOTO-LITHOGRAPHER, WASHINGTON, D. C.

2 Sheets—Sheet 2.

A. TROWBRIDGE, Jr.

ORGAN STOP-ACTIONS.

No. 194,017. Patented Aug. 7, 1877.

Fig. 4.

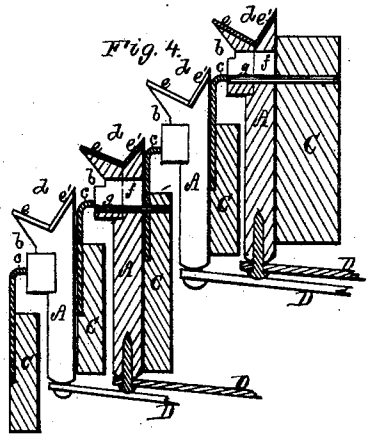

Fig. 5.

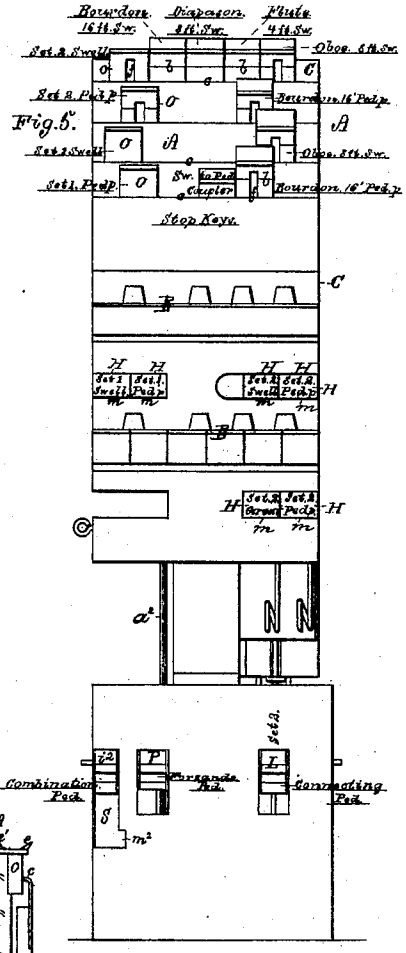

Fig 3.

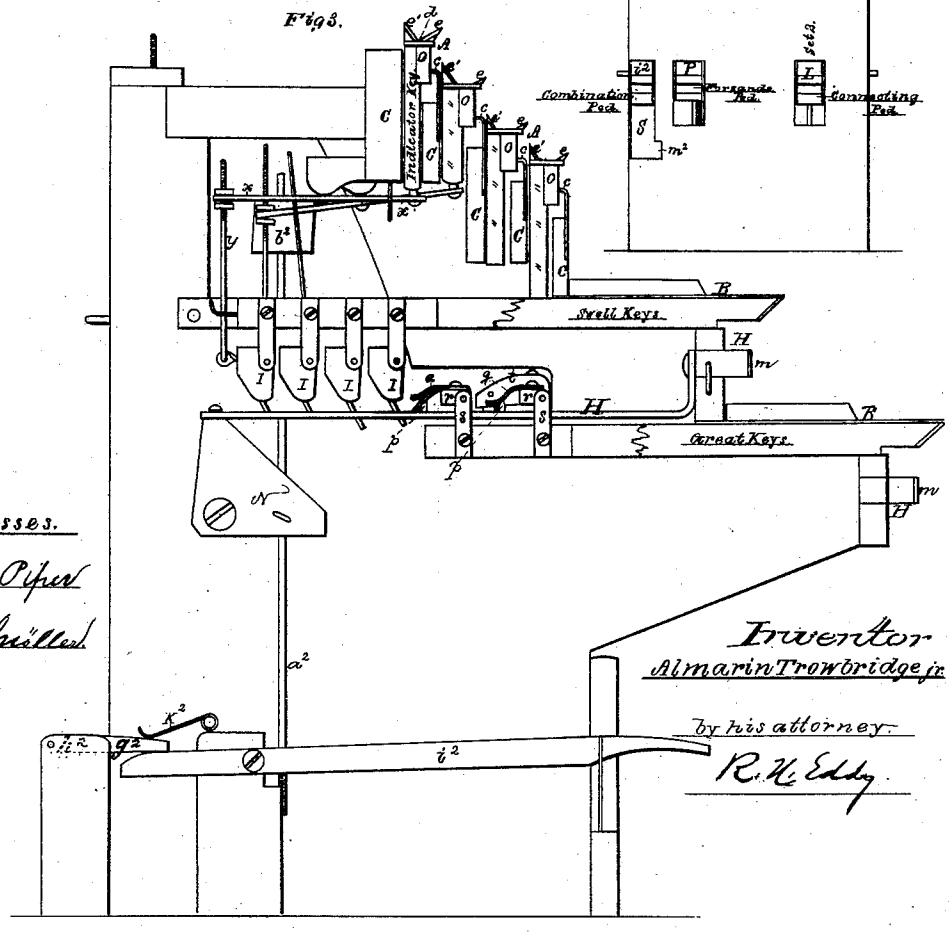

Witnesses.

S. N. Piper

D. H. Russell

Inventor.

Almarin Trowbridge jr.

by his attorney.

R. K. Eddy.

N. PETERS, PHOTO-LITHOGRAPHER, WASHINGTON, D. C.

UNITED STATES PATENT OFFICE.

ALMARIN TROWBRIDGE, JR., OF BOSTON, MASSACHUSETTS.

IMPROVEMENT IN ORGAN STOP-ACTIONS.

Specification forming part of Letters Patent No. **194,017**, dated August 7, 1877; application filed May 17, 1877.

To all whom it may concern:

Be it known that I, ALMARIN TROWBRIDGE, Jr., of Boston, of the county of Suffolk and State of Massachusetts, have made a new and useful invention having reference to Musical Instruments usually termed "Organs;" and do hereby declare the same to be described in the following specification and represented in the accompanying drawings, of which—

Figure 1 is a top view, and Figs. 2 and 3 side elevations, of parts of an organ provided with my invention.

One object of my invention is to enable a performer, while playing the keys with one of his hands, to use the other to great advantage in moving sundry of the stop-keys, so as to bring or cause to be brought into proper positions mechanism for operating the stops.

With the ordinary arrangements of draw-stop knobs in organs it is often exceedingly difficult for a performer to make sudden and extensive changes or movements of such knobs.

To obviate such difficulty various devices, such as "combination pedals," "buttons," "knobs," "crescendo-pedals," "ventils," &c., have been employed.

The invention hereinafter described is intended to serve the advantages of most, if not all, such devices, as well as others of importance.

Instead of the usual draw-knobs to control the stops, I make use of what I term "keys," one form of which is shown in Figs. 1 and 2 at A. These keys are distinct from the regular playing-keys B B, some of which are represented in the drawings, though under different conditions from what they are when in use in an organ—that is to say, they are shown as projecting from or making parts of what is used to sustain the stop operative mechanism, such keys, when in their normal conditions, being entirely separate from such supports.

The stop-keys A I arrange vertically between rails C C, all but the upper of which are provided with hooked catch-plates *c*, formed and disposed as shown. Each key A has on its front side a notch, *b*, to enable the key, on being depressed and drawn toward the performer, to engage with the catch-plate, so as to be held down thereby. The top of the said key has an angular notch, *d*, faced with plates *e* e^1 of ivory. On pressing the finger down upon the plate *e* with sufficient force, the key will be pushed downward, and forced forward into engagement with the catch-plate.

By pressing the finger against the plate e^1 the key can be easily forced back out of engagement with the catch-plate, and will be moved upward by its key-lever under the retractive force of its operative spring.

In each stop-key A there is a vertical slot, *f*, (see Fig. 4,) which is a section of the said key *a*, stud or pin *g* being projected from the next adjacent rail into the slot.

The slot and pin serve to guide the stop-key in its vertical movements, as well as to limit the extent thereof.

At its lower end each stop-key rests upon one arm of a lever, D, there being, as represented, two of such levers to each of the stop-trackers E. Each lever is forked at the end where next the tracker, and embraces such tracker. The lever has over it one of two nuts, *i i*, screwed upon a long screw formed on the tracker, such screw being to enable the nuts to be properly adjusted. Furthermore, there is to each lever a spring, *l*, for moving it, so as to cause it to force its stop-key upward when it may be necessary to effect such movement.

The tracker is to be supposed to be suitably applied to the valve of the pneumatic apparatus for operating the stop slider or valve. This apparatus, involving no novelty, and being well understood by organists and organ-builders, is not represented in the drawings.

Each of the aforesaid levers D is pivoted to a rail, F, arranged over it, as shown, which serves also to support all or any suitable number of the levers of one row of stop-keys. The rail F is movable vertically, it being provided with a spring, G, for depressing it. The nut *i*, which is directly over the lever D, is to be so adjusted that when the rail F is in its lower position the lever D shall not touch it, (the said nut,) even though the stop-key may be down. When the rail is at its higher position the stop-key, on being depressed, will cause its lever to so act against the nut

as to raise the tracker, and thereby open the valve of the pneumatic apparatus, which operates the stop-slider.

More than two sets of stop-keys may be employed, as each set occupies only about one-quarter the room that would be required for a corresponding set of draw-knobs.

The upward movement of the rail F is effected by mechanism which I will now describe.

A slide, H, provided with a knob, *m*, and arranged as shown, engages with an elbow-lever, I, connected with the rail F by a slotted bar, K. By pushing in the knob *m*, the rail F will be forced upward until a stud, *p*, extending up from the slide, may have passed by and beyond a pawl, *q*, attached to a rock-shaft, *r*, which is arranged as shown, and has its journals supported in stationary standards *s s*. There is such a rock-shaft to each department of the organ—that is, there is one to the "swell-organ," one to the "great organ," one to the "choir-organ," &c., the pedal-organ having two or more, as occasion may require.

The slides H I arrange in pairs, (see Fig. 5,) which is a front elevation of the rows of playing-keys, and the stop-keys, &c. In this figure the knobs of the slides are shown as paired, and with their designating marks.

As hereinbefore described, each slide H has a stud, *p*, and a stop-pawl, *q*, to retain it in position when pushed in. The rock-shaft carrying the stop-pawl is to have as many of such applied to it as there are slides H to the department of the organ to which the rock-shaft belongs. The drawings show three of such rock-shafts, one being for the swell-organ and the others being for the pedal-organ.

While one of the slides H may be in the act of being pushed in, its stud will pass under and raise the pawl. In consequence of such pawl being fixed to its rock-shaft, all the pawls of such shaft will be simultaneously raised, whereby all the slides held by the said pawls will be liberated, and will be forced back by the expansive power of the spring G of the rail F, connected with such slides. On continuing to push on the slide H its stud will pass the pawl, which will next drop down in rear of the stud, and serve with it to retain the slide in its rearmost position.

Hence, on pressing on one slide all others belonging to the same department of the organ will be released, and the group of stop-keys, controlled by the slide so pushed in, will be put in condition for operating their trackers, the other slides, so released, causing their stop-keys to be out of engagement with their trackers.

For the pedal-organ it is well to have at least two groups of stop-keys in each set thereof, one group being for operating the softer stops for use with the choir and swell organs, and the other being for actuating the louder or all the pedal-stops for use with the great organ. Of course the slide which connects a soft-pedal group for use with the swell-organ should at the same time disconnect any loud group which may be on. This I am enabled to effect by connecting the lowest of the rock-shafts with that directly over it by means of arms *t t*, and a link, *u*, arranged therewith, as shown.

To draw back simultaneously all the pairs of slides belonging to a given set of stop-keys, I employ a pedal, L, a connection-rod, M, and two elbow-levers, N N, arranged as shown; these latter, at their upper corners, being jointed to the slides directly over them, and the rod M being so applied to the pedal and the two levers as to move both levers simultaneously when the pedal is depressed.

To each group of stop-keys I apply an indicator-key, O, which I arrange as represented. It is to be free to slide vertically, but is not notched at its top. By a lever, *x*, and a rod, *y*, it is connected with the rock-shaft of its slide H. The object of the indicator is to show to the performer whether the slide is in or out. When the indicator is up, or at its highest position, the slide is out, but when the indicator is down the slide will be in. Besides serving such purpose, the indicator, with its attachments, as described, may be used to effect the drawing in of the slide.

It is sometimes desirable to produce a sforzando or explosive effect, lasting for a short time, without interfering with an existing combination. This I accomplish by means of a pedal, P, and mechanism applied to a pair of rails, F, the whole being to enable the rails to be forced upward when the pedal may be depressed. This mechanism consists of a pivot-rod, a^2, extending up from the pedal, and carrying an adjustable block, b^2, from which two pins, c^2 c^2, are projected into slots d^2 d^3 made in the bars K K. These slots admit of the rails F F being forced upward when their elbow-levers I I are moved for such purpose.

When an organ has a crescendo-pedal, it may be attached to the stop-actuating mechanism through the intervention of a system of connecting-levers, e^2, applied to the trackers or arranged therewith, as shown. These levers should be pivoted to rails f^2, which, for moving them, should have appliances like those hereinbefore described as applied to the rails F F. By such means the crescendo-pedal can be applied to operate the stops of any or all of the departments of the organ.

Should it be desirable to use but one set of stop-keys, combinations can be made by having each of the trackers pass through an arm, g^2, projecting from a rock-shaft, h^2, provided with a pedal, i^2, for moving it, the said rock-shaft, one way, and also with a spring, k^2, for moving it the opposite way. Each of the trackers should have a nut, l^2, screwed on it, for the arm to act against. By screwing down the nut sufficiently the arm, while being raised, will act on the nut; but by screwing the nut upward on the tracker sufficiently the arm, on being raised, will not raise the tracker.

In the pedal-guide S there should be a notch, m^2, for the pedal to be sprung into when depressed, such notch being to hold the pedal down.

I sometimes place the sets of playing-keys between four sets of stop-keys—that is, I have two sets of stop-keys at each end of the arrangement of playing-keys, and I dispose the stop-keys in ranges standing oblique to the playing-keys, in manner for easy access to be had to them by the performer.

I do not claim, as in the United States Patents Nos. 171,702, 141,469, a stop-register arranged in the name-board of an organ to indicate the position of a stop; but

Having thus described my invention, what I claim as such is as follows:

1. For actuating the stop-sliders of an organ, two or more sets of keys, A, separate from the playing-keys B, and provided with mechanism, substantially as described, or its equivalent, by which one or more of such sets may be thrown, as explained, either into or out of engagement with the trackers or stop-actuating devices, such mechanism consisting not only of the catch-plates *c c*, levers D D, and nuts *i i*, applied to said keys A and to each tracker, but of the lever-supporting rails F F, springs G G, slides H H, elbow-levers I I, and the connection-bars K K, the slides H being provided with studs and pawls, and all being arranged to operate essentially as explained.

2. Each key A, provided with the angular notch at its upper end, substantially as specified.

3. Each key A, provided with a guide-slot, and notched in front, and arranged between rails having a catch-plate and guide-pin to operate with the key, all as specified.

4. In combination with each key A and its lever D, for operating the stop-tracker, mechanism for raising or depressing the fulcrum of the lever, so as to bring such lever into or out of engagement with the tracker, as set forth, such mechanism, as described, for such purpose being a spring, a slide, its stud, and pawl, an elbow-lever, and a connecting-bar, all arranged as set forth.

5. The combination of the arms *t t* and link *u* with the two lowest rock-shafts, all being substantially as and for the purpose specified.

6. In an organ, and for drawing back simultaneously all the pairs of slides belonging to a given set of stop-keys thereof, the pedal L, connection-rod M, and two elbow-levers N N, arranged and applied essentially as specified and represented.

7. In combination with a group of stop-keys, A, and their operative slide H, as described, the indicator-key O, combined with such slide by a lever, *x*, and rod *y*, connected with the shaft of such slide, so as to operate substantially as set forth.

8. In combination with two of the rails F F, and for producing a sforzando or explosive effect, mechanism, substantially as described, such consisting of the pedal P, rod a^2, adjustable block b^2, and the pins c^2 c^2, arranged in slots d^2 d^2 of the bars K K, as explained.

9. The notched guide S, the pedal i^2, spring k^2, rock-shaft h^2, and the arm g^2, in combination with the trackers, provided with nuts arranged over such arm, as described.

ALMARIN TROWBRIDGE, JR.

Witnesses:
R. H. EDDY,
J. R. SNOW.