Feb. 2, 1965 W. H. STRAUSSER 3,168,310

CHILD'S AMUSEMENT DEVICE

Filed April 24, 1963

FIG.2.

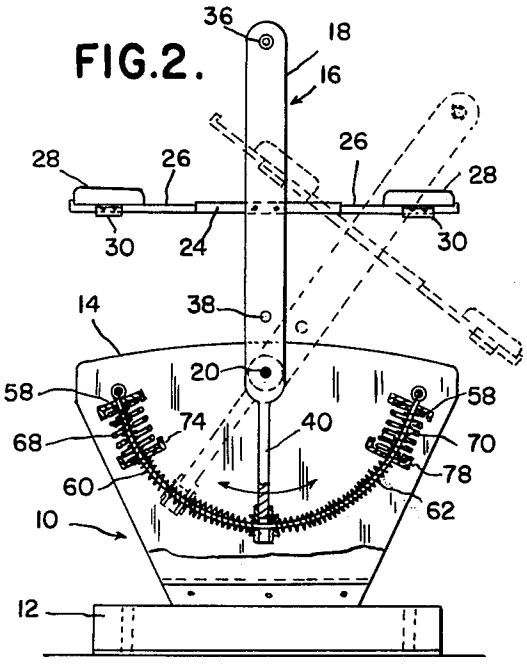

FIG.3.

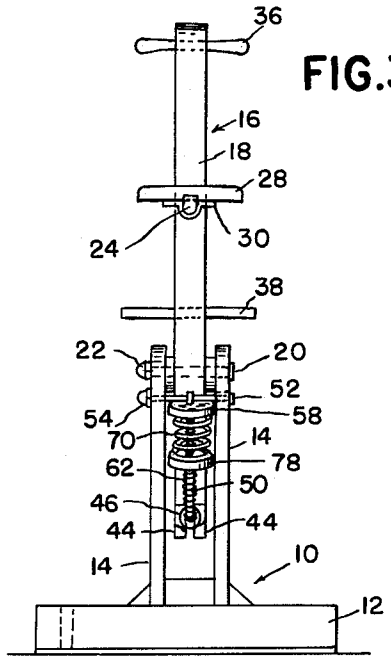

FIG.4.

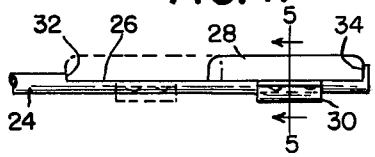

FIG.5.

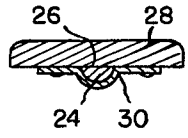

FIG.1.

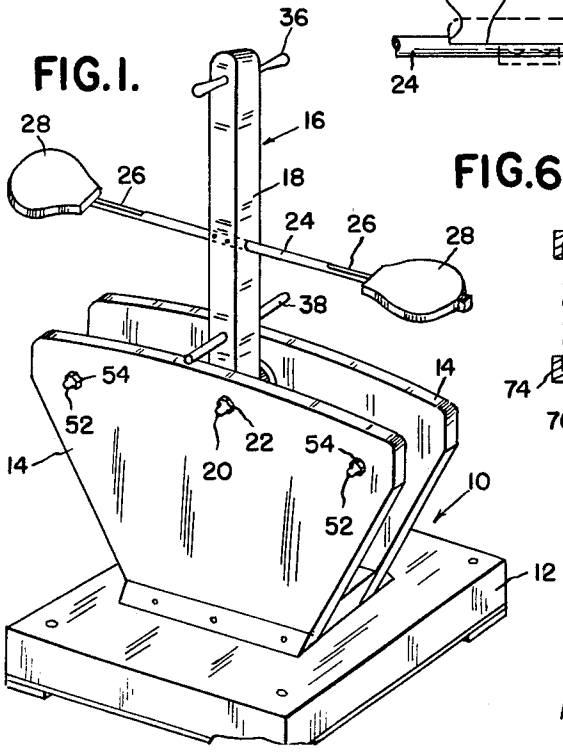

FIG.6.

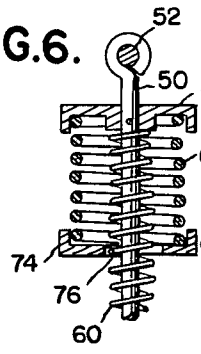

FIG.7.

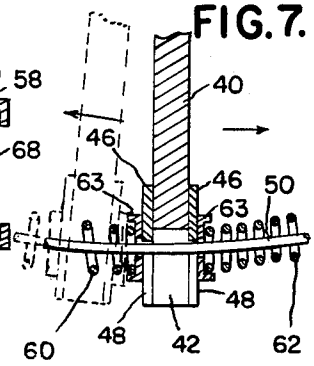

INVENTOR.
WILLIAM H. STRAUSSER
BY
Whittemore, Hulbert & Belknap
ATTORNEYS

United States Patent Office

3,168,310
Patented Feb. 2, 1965

3,168,310

CHILD'S AMUSEMENT DEVICE

William H. Strausser, 5082 Parker, Apt. 9, Detroit, Mich.

Filed Apr. 24, 1963, Ser. No. 275,273
4 Claims. (Cl. 272—54)

This invention relates generally to a child's amusement device and refers more particularly to a device of the rocking or swinging type.

One object of this invention is to provide a child's amusement device of the type having a swinging unit for supporting at least one child, provided with spring means for resisting the swinging of the unit with a relatively low resistance initially and with a sudden much higher resistance during the last part of oscillation to produce a substantial rebound action.

Another object of the invention is to provide a child's amusement device having a first spring acting on the swinging unit throughout a relatively large arc of oscillation from neutral position, and a second spring acting on the unit only during the final part of the oscillation thereof.

Another object is to provide a child's amusement device in which the second spring adds substantially to the total resistance, providing a substantial rebound effect.

Another object is to make the second spring considerably stronger than the first spring.

Another object is to provide a child's amusement device in which the swinging unit is designed to carry two children, one on either side of an upright supporting member in the plane of swinging movement.

Other objects and features of the invention will become apparent as the description proceeds, especially when taken in conjunction with the accompanying drawings, wherein:

FIGURE 1 is a perspective view of a child's amusement device embodying my invention.

FIGURE 2 is a side elevational view with parts broken away and in section of the device shown in FIGURE 1.

FIGURE 3 is an end view.

FIGURE 4 is an enlarged fragmentary detail of a portion of FIGURE 2.

FIGURE 5 is a section view taken on the line 5—5 of FIGURE 4.

FIGURE 6 is an enlarged fragmentary sectional view of a portion of FIGURE 2.

FIGURE 7 is an enlarged fragmentary sectional view of another portion of FIGURE 2.

Referring now more particularly to the drawings, the device includes a frame 10 having a heavy base 12 and vertical, laterally spaced, parallel side plates 14 rigidly secured to and projecting upwardly from the base.

A swinging unit generally indicated at 16 is pivoted to the frame. The swinging unit comprises an elongated generally upright member 18 which extends between the plates 14 and is pivoted thereto for swinging movement in a vertical plane parallel to the planes of the plates by a horizontal pivot pin 20 extending between and connecting the plates. The pin 20 has a head at one end and a nut 22 is threaded on the opposite end so that the pin can be easily removed. The upper swinging portion of the upright member 18 carries a crossbar 24 which extends through and is secured to the member. The crossbar 24 extends in the plane of swinging movement of the upright member 18 and near each end has an elongated cutout portion providing flat surfaces 26. Seats 28 are slidably supported on the flat surfaces 26 and are retained thereon by brackets 30. The brackets are secured to the undersides of the seats 28 and encircle the crossbar 24 to permit the seats to slide but prevent them from being separated from the crossbar. The flat surfaces 26 prevent the seats from rotating and the shoulders 32 and 34 at either end of each cutout provide limits determining the extent of

sliding movement of the seats longitudinally of the crossbar. Handles 36 and foot rests 38 are also provided on the upright member.

The upright member has a depending portion 40 between the side plates which is formed with a slot 42. The slot 42 is open at the lower end of the depending portion and extends upward a short distance between the sides of the upright member to provide a fork-shape in which the legs 44 of the fork are on either side of the slot. The plates 46 are secured to opposite sides of the depending portion at its lower end and are formed with slots 48 which likewise are open at their lower ends and generally match the slot 42 in the depending portion of the upright member which they overlie. Hence the plates 46, by reason of the slots 48, are generally U-shaped.

A curved rod 50 is located between the plates 14 of the frame and is provided with an eye at each end. Pins 52 extend through the eyes and through the plates 14, each having a head at one end and a nut 54 threaded on the other end so that the pins 52 can be easily removed. The rod extends between its ends in an arc whose center coincides with the pin 20. The rod extends in the plane of swinging of the upright member and it will be noted that it extends through the registering notches or slots 42 and 48 in the depending portion 40 of the upright member and end plates 46. Hence the slots 42 and 48 clear the rod so that the upright member can swing or oscillate without interference with the rod.

An abutment flange 58 is secured to the rod at each end thereof. A compression coil spring 60 winds about the rod and is compressed between one of the flanges 58 and a plate 46 carried by the depending portion of the upright member, and a compression coil spring 62 winds about the rod and is compressed between the other flange 58 and the other plate 46 carried by the depending portion of the upright member 18. When the upright member is vertical as shown in solid lines in FIGURE 2, it is held centered by the springs 60 and 62 which act on the depending portion of the upright member under a light pressure. Flanges 63 are fixed on the ends of springs 60 and 62 and slide on rod 50 so as to abut against plates 46.

Two additional compression coil springs 68 and 70 are also wound around the rod 50. Spring 68 is secured to one of the flanges 58 at one end, and is secured to another flange 74 at the other end. Flange 74 has a central hole 76 to clear the rod 50 and spring 60. The other spring 70 has one end secured to the other flange 58 and the other end secured to a flange 78, which flange likewise has a central hole to clear the rod 50 and spring 62. The springs 68 and 70 are considerably stronger, that is they offer greater resistance to compression than the springs 60 and 62.

In use, the upright member is rocked or tilted back and forth either by one child occupying one of the seats or by two children occupying both seats. As the upright member 18 rocks, the seats 28 can slide longitudinally of the crossbar 24. When the upright member rocks to the dotted line position of FIGURE 2, the spring 60 is compressed more and more to offer increasing resistance to the swinging movement. Further swinging causes the depending portion of the upright member to contact the flange 74, compressing spring 68. Spring 68 is considerably heavier than spring 60 and hence provides a sudden increase in the resistance to swinging of the upright member. The added resistance provided by spring 68 is enough to provide a substantial rebound, that is a sudden reversal of movement tending to return the unit to its neutral or upright position. The strength of spring 68 can of course vary depending upon the "jolt" or "rebound" desired. Even where it is desired that the rebound action be not too sudden or violet the spring 68 will provide a cushion and a rather brisk return swing

toward neutral position. It will be obvious that oscillation in the opposite direction from neutral will meet with the same spring resistance. First the weaker spring **62** will act to oppose movement from the neutral upright position, and then the heavier spring **70** will effect a rather sudden reversal. The springs **60** and **62** are not secured to the depending portion of the upright member so that the upright member when moving clockwise, for example, will move out of contact with the spring **62**. If desired, the upper ends of the springs **60** and **62** can be secured to flanges **58**.

It will be apparent that the springs **60** and **62** resist changing movement in one direction or the other throughout the full extent of the arc of oscillation. The springs **68** and **70** come into play only during the final portion of the oscillation.

Since the parallel pins **20** and **52** can be readily removed from the plates **14** by merely unthreading the nuts **22** and **54**, the upright member **18** and the assembly including the rod **50** and springs can be readily removed from the supporting frame. The upright member can be removed without removal of the rod **50** since the notches **42** and **48** at the lower end of the upright member permit the upright member to be separated from the rod by a simple upward movement.

What I claim as my invention is:

1. A child's amusement device comprising a supporting frame having two vertical, laterally spaced parallel plates, a swinging unit including a generally upright member extending between said plates and pivoted thereto on a horizontal pin connecting said plates, said upright member having a riding portion projecting above said pin and above said plates, seating structure carried by said riding portion and having means for supporting a child on both sides of said upright member in the plane of oscillation thereof, said upright member having a depending portion beneath said pin and between said plates, a rod mounted between said plates and extending in an arc centered at said pin, and means for resiliently centering said upright member in a neutral vertical position and for resisting oscillation thereof in either direction from said

neutral position including a first compression coil spring coaxial with and carried by said rod at one side of said depending portion and acting thereon when said upright member is in neutral position and throughout a relatively large arc of oscillation of said upright member in one direction from said neutral position to impose a yielding resistance thereto, a second compression coil spring coaxial with and carried by said rod at said one side of said depending portion acting thereon only during the final part of the oscillation of said upright member in said one direction to impose a yielding resistance thereto, a third compression coil spring coaxial with and carried by said rod at the opposite side of said depending portion and acting thereon when said upright member is in neutral position and throughout a relatively large part of oscillation of said upright member in the opposite direction from said neutral position to impose a yielding resistance thereto, and a fourth compression coil spring coaxial with and carried by said rod at said opposite side of said depending portion and acting thereon only during the final part of the oscillation of said upright member in said opposite direction to impose a yielding resistance thereto.

2. The device defined in claim 1, wherein said second and fourth springs are respectively stronger than said first and third springs.

3. The device defined in claim 2, wherein said depending portion of said upright member has a clearance opening through which said rod passes.

4. The device defined in claim 3, wherein said clearance opening is a slot extending longitudinally of said upright member and opening at the lower end thereof whereby, when said upright member is disconnected from said horizontal pin, said upright member can be separated from said rod by a movement at right angles thereto.

References Cited by the Examiner

UNITED STATES PATENTS

2,325,988	8/43	Thomas	46—147
2,398,122	4/46	Souza	272—55 X

RICHARD C. PINKHAM, *Primary Examiner.*