Sept. 20, 1938. R. H. LACHMUND 2,130,687

AUTOMATIC VALVE

Filed Oct. 22, 1934 2 Sheets-Sheet 1

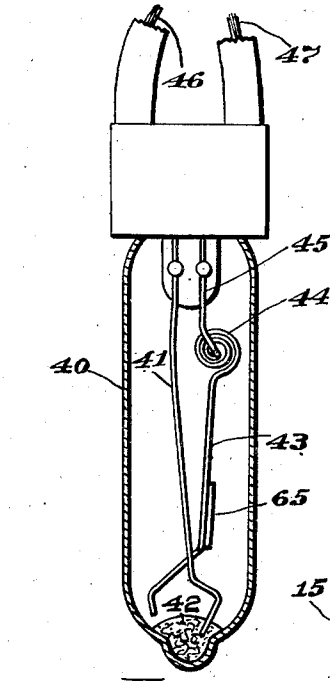

Fig. 7

Fig. 1

Fig. 8

INVENTOR:
Ralph H. Lachmund
BY Richard W. Hutting
ATTORNEY

Sept. 20, 1938. R. H. LACHMUND 2,130,687

AUTOMATIC VALVE

Filed Oct. 22, 1934 2 Sheets-Sheet 2

Fig. 2

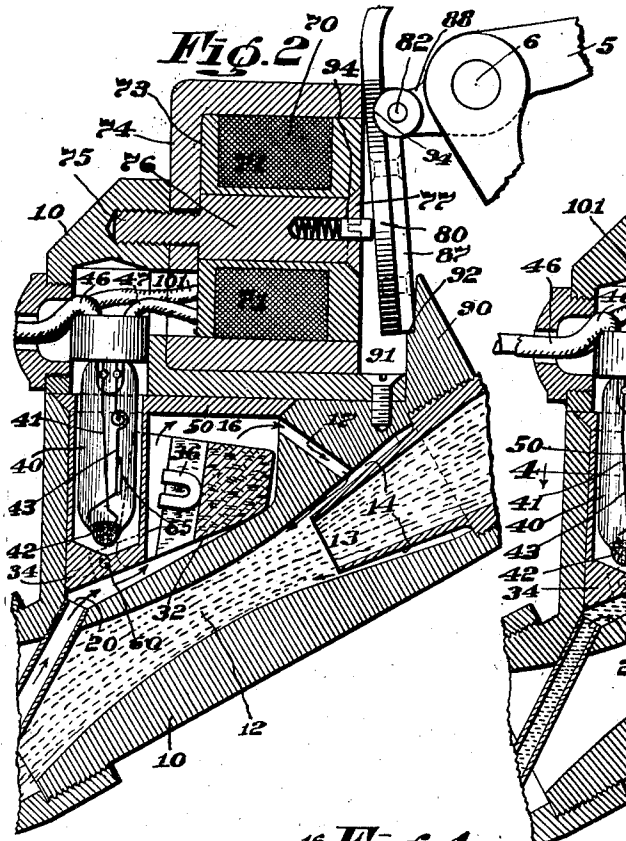

Fig. 3

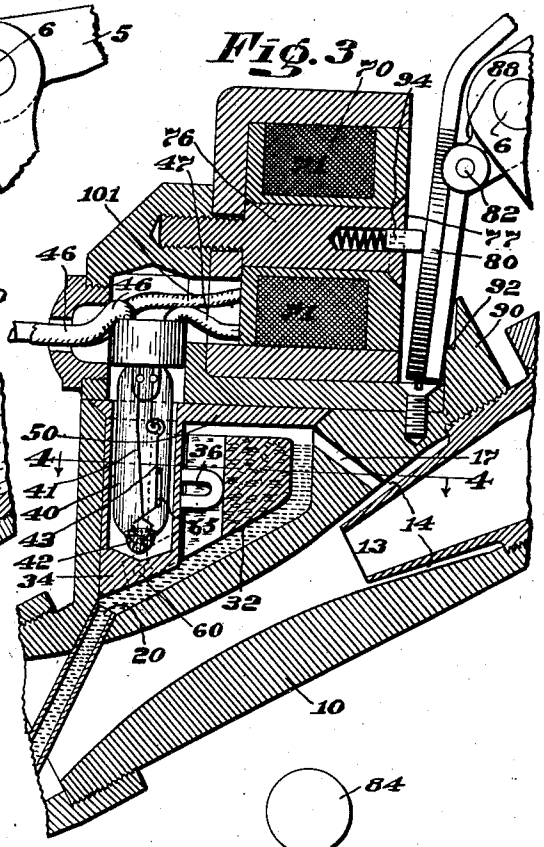

Fig. 4

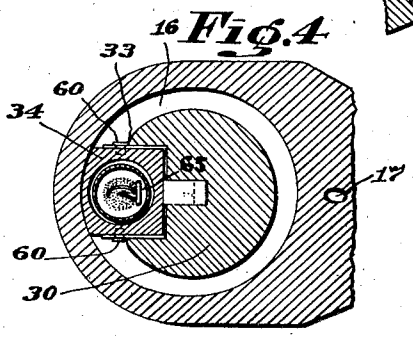

Fig. 5

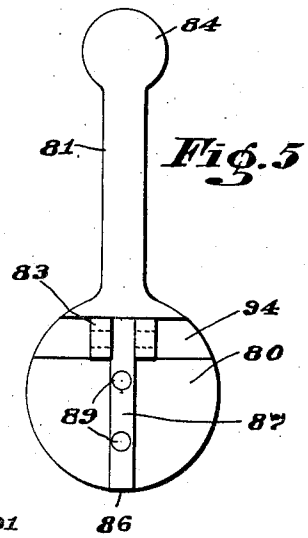

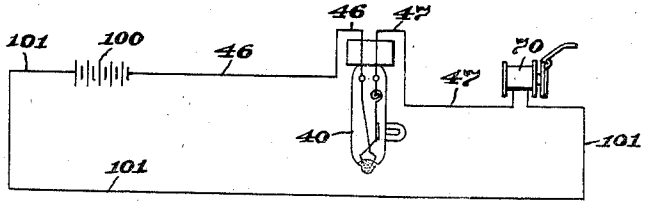

Fig. 6

INVENTOR:
Ralph H. Lachmund
BY Richard Whiting
ATTORNEY

Patented Sept. 20, 1938 2,130,687

UNITED STATES PATENT OFFICE

2,130,687

AUTOMATIC VALVE

Ralph H. Lachmund, San Francisco, Calif.

Application October 22, 1934, Serial No. 749,425

10 Claims. (Cl. 226—127)

This invention relates to automatic valves and particularly to a device of that character adapted for use with apparatus for dispensing gasoline to automobiles for stopping the flow of gasoline when the liquid level in the receiving container rises to a predetermined height.

It is my object to provide a device of that nature which is operated by float mechanism, as is desirable, in which the float is disposed remote from the discharge end of the liquid dispenser and in an auxiliary float chamber to which liquid is conducted from the receptacle being filled by suction which is induced by the passage of liquid into the receptacle.

The use of electrically operated mechanism for automatically operating the valve when the float is actuated is desirable due to the rapidity of action and the small degree of work required of the float, but its use in connection with apparatus for dispensing gasoline has heretofore been considered dangerous for obvious reasons. It is a further object of my invention to provide mechanism which is electrically operated to close the outlet valve and yet which, by its novel construction, is entirely safe in operation in connection with inflammable liquid.

These and further objects and advantages of my invention will appear from a detailed description thereof, taken in connection with the accompanying drawings, in which:

Fig. 1 is an elevation view, partly in section, of my device showing the nozzle inserted in the receiving tank with the parts shown in position prior to the opening of the outlet valve;

Fig. 2 is an enlarged vertical section, partly broken away, showing the position of the parts when the outlet valve has been manually opened and gasoline is flowing into the tank;

Fig. 3 is a view similar to Fig. 2, showing the parts in position after the float has been actuated and the valve automatically closed;

Fig. 4 is a horizontal section taken on the line 4—4 of Fig. 3;

Fig. 5 is a detail of the latch bar shown prior to being bent for assembly into the device;

Fig. 6 is a wiring diagram showing the electric circuit which operates the electromagnet;

Fig. 7 is an enlarged detail section of the mercury switch, and

Fig. 8 is a perspective view of the float showing the permanent magnet embedded therein.

Referring to the drawings and particularly Figs. 1, 2 and 3, my device is shown incorporated into gasoline dispensing apparatus of the usual type comprising a supply pipe 1 having secured thereto a valve chamber 2 enclosing the valve 3 which is spring pressed to the closed position illustrated by means of the compression spring 4 and which may be manually opened by the hand lever 5 pivoted at 6 and operating to depress the valve stem 7 in an obvious manner.

The mechanism comprising my invention and adapted for attachment to any valve of the general type above described, is carried by the housing 10 connected to the outlet side of the valve chamber 2 by the connecting tube 11, screw threaded as indicated into the valve chamber and housing. The housing 10 is bored axially at 19 to form a continuation of the supply conduit and the bore gradually converges and diverges to form a restricted throat area 12. The connecting tube 11 is formed at its outlet end into a tapering injector tube 13 whose conical inner and outer surfaces conform generally to the converging contour of the inlet side of the bore 19. The outer surface of the injector tube 13 is spaced from the adjacent surface of the converging bore to form an annular conical vacuum chamber 14 provided for a purpose to be described.

The housing 10 is formed with an enlarged boss indicated generally at 15 which is chambered on the inside to form a float chamber 16 which communicates with the annular vacuum chamber 14 by the duct 17. The float chamber 16 is also provided with a second opening 20.

Suitably secured on the outlet side of the housing 10 is the flexible hose 21 commonly provided in such apparatus and forming a continuation of the axial bore of the housing 10 and adapted for insertion in the gasoline receiving tank 22 of an automobile in the usual manner. The flexible hose 21 terminates in a tapered metal nozzle 23 which is provided with an orifice 24 near the extremity thereof. The aforesaid opening 20 in the float chamber 16 communicates with the opening 24 by means of the metal tubing 25 of small diameter, one end of which is secured in the opening 20 and the other end 26 of which fits snugly in a flexible tubing 27 extending inside the flexible hose 21 and terminating in the orifice 24 opening through the side wall of the nozzle 23 as indicated.

The float chamber 16 encloses a float 30 made of suitable material such as cork, which, as indicated in Figs. 8 and 4, is substantially cylindrical in shape to conform to the circular cross-sectional area of chamber 16 (Fig. 4), and is truncated at the bottom to form a bottom surface 32 having a slope which approximately parallels the bottom sloping surface of the float

chamber 16 (Fig. 3). The cork float 30 is provided with a large rectangular slot 33 of substantially the proportions indicated for a purpose to be described and it is also provided with a second smaller rectangular slot 35 in which a permanent magnet 36, preferably horseshoe in shape, is inserted and suitably secured in approximately the position indicated.

Enclosed in the housing 10 and disposed immediately adjacent the float chamber 16 is a mercury switch 40, of common design (Fig. 7) and having a fixed terminal 41 which maintains contact with a small globule of mercury 42 and a movable contact 43, the lower extremity of which can be moved into and out of the globule 42 of mercury and the upper end of which is formed in the shape of a volute spring 44 suitably secured to the rigid lead 45 and adapted to urge the lower extremity of the terminal 43 into the normal position indicated in Fig. 7, out of contact with the mercury. The leads 46 and 47 connect the mercury switch in an electric circuit to be described.

The mercury switch 40 is suitably mounted in the housing 10 and is completely enclosed by a hard rubber casing having an upper portion 50 (Fig. 2) which closes the top of the float chamber 16 and a depending oblong box-like portion 34 which fits snugly within the float chamber 16. The casing 34 completely encloses the glass bulb of the mercury switch and guards against any access of gasoline thereto.

The cork float 30 is pivoted to the bottom of the depending casing 34 by the pivots 60 extending into the casing and rotatably securing the lugs 61 (Fig. 8) extending from the bottom of the cork float 30 and rigidly secured thereto.

By this construction the cork float is adapted to assume a normally depressed position, as indicated in Fig. 2, wherein the bottom surface 32 of the cork float rests against the bottom of the float chamber and the permanent magnet 36 is relatively remote from the casing 34 enclosing the mercury tube or, alternatively, a raised floated position as indicated in Fig. 3 wherein the cork float has been swung upwardly about the pivots 60 and the permanent magnet 36 abuts the outside of the casing 34, the enlarged rectangular slot 33 at this time surrounding the rectangular casing 34 as indicated in Fig. 4.

The movable electrode 43 of the mercury switch preferably has its body portion disposed on the side toward the float chamber 16 and this electrode is provided with a small mass of iron 65 of a length and width to completely span the legs of the horseshoe magnet (see also Fig. 4) and disposed opposite the horseshoe magnet when the latter is in elevated position as indicated in Fig. 3, in which position it will be noted that the mass of iron 65 is attracted by the horseshoe magnet and the lower extremity of the movable terminal 33 is drawn into the globule of mercury 42.

An electromagnet indicated generally at 70 is mounted on the top of the housing 10 in a suitable casing, the windings 71 of the magnet being mounted on the annular fibre spool 73. The assembled electromagnet is secured to the casing by the screw threaded extension 75 of the core 76 which, at its opposite end, is provided with an enlarged face 77 to secure the parts in the position illustrated.

Disposed in front of the enlarged face 77 of the core 76 and adapted to be attracted by the electromagnet when it is energized, is the depending enlarged circular face 80 of a latch lever 81 (see also Figs. 5 and 1), which is pivoted at 82, by means of the ears 83, to the small arm 88 integral with the hand lever 5 and projecting forwardly of the pivot 6. The lever 81 is constructed of iron and after being cut out in the shape indicated in Fig. 5 to form the enlarged face 80, the lever is bent to the shape indicated in Fig. 1 to present a broadened thumb rest 84 adjacent the grip of the lever 5. Prior to bending the lever 81 to the shape indicated, the ears 83 are attached,—the ears being integral with a thin iron bar 87, riveted at 89 to the under surface of the face 80, which as indicated, is grooved at 94 to partially receive the ears 83. The bar 87 terminates, adjacent the periphery of the face 80, in an abrupt squared nose 86.

As illustrated best in Figs. 2 and 3, the exposed face of the magnet is spaced from an upstanding boss 90 formed on the housing 10, to provide an aperture 91 of a width somewhat greater than the width of the lever 81 with the bar 87 secured thereto. The boss 90 is recessed to provide a squared shoulder 92 and the front face of the core 76 is drilled axially to receive a sliding spring-pressed plunger 94. It will be apparent from this construction that when the hand lever 5 is manually depressed to open the valve 3, the pivot 82 will swing upwardly about the pivot 6, gradually elevating the latch face 80 until it reaches the position shown in Fig. 2 when the spring plunger 94 will force the nose 86 over the shoulder 92 of the boss 90 thereby effectively maintaining the valve in open position upon release of the hand lever 5.

As indicated in the wiring diagram of Fig. 6 and by the wires indicated in Figs. 2 and 3, the mercury switch 40 is connected in series with the windings 71 of the electromagnet and with a suitable source of power, such as a battery 100. The lead 46 connects the battery 100 with one terminal of the mercury switch 40 and the lead 47 connects the other terminal of the mercury switch with the winding of the electromagnet 70 which is connected in series with the battery 100 by the lead 101.

With the device constructed as above described its operation is as follows:

The flexible hose 21 is inserted in the gasoline tank of the automobile as illustrated in Fig. 1 and the valve 3 opened by depression of the hand lever 5 in the usual manner to cause a flow of gasoline into the tank. The valve 3 is maintained in its open position by the latch lever 81 which, upon depression of the hand lever 5, is elevated from its position indicated in Figs. 1 and 3 to the position indicated in Fig. 2 wherein the nose 86 rests on the shoulder 92. The operative can now release the hand lever 5 and as the valve 3 is maintained in its open position the operative is free to leave the gasoline dispenser and attend to other duties, such as checking the oil or water supply, etc.

The gasoline in flowing into the car passes through the restricted opening 13 of the injector tube and thence through the restricted throat area 12 of the bore 19, as indicated in Fig. 2, thereby increasing the velocity of the gasoline and causing a suction or partial vacuum in the narrow annular chamber 14 surrounding the injector tube 13. This suction is communicated, as indicated by arrows in Fig. 2, to the float chamber 16 by the duct 17 and from the float chamber 16 through the opening 20, tube 25 and flexible tube 27 to the orifice 24 which is posi-

tioned at approximately the desired elevation of the liquid level. As a result of this suction, air will be drawn through the opening 24 into the float chamber, through the duct 17 and will mix with the gasoline flowing into the tank.

As soon as the level of the gasoline in the tank reaches a height to cover the opening 24, gasoline will be sucked into the tube 27 and thence into the float chamber 16, thereby floating the cork float 30 and raising the permanent magnet 36 into the position illustrated in Fig. 3. As a result of the proximate position of the magnet 36, the mass of iron 65 on the movable electrode 43 will be attracted, drawing the lower extremity of the terminal 43 into the globule of mercury and completing the circuit from the source of power 100 through the electromagnet 70.

The electromagnet thus energized will attract the face 80 of the lever 81 moving the nose 86 off the shoulder 92, the spring pressed plunger 94 yielding inwardly during this operation, and permitting the spring 4 of the valve 3 to return the valve to its seat and thereby automatically shut off the flow of gasoline. Upon drainage of the gasoline from the float chamber 16, the float 30 is retracted by its own weight, coming to rest in the position indicated in Fig. 2, whereupon the movable electrode 43 of the switch 40 returns to its initial position, out of contact with the mercury 42, as a result of the retrieving action of the volute spring 44, thereby breaking the circuit to the electromagnet 70.

Obviously the valve 3 can be manually closed at any time by depression of the thumb piece 84 of the latch lever 81.

From the foregoing description it will be apparent that I have provided a device which is both safe and effective for automatically stopping the flow of gasoline to an automobile tank. The preferred embodiment of my invention which is herein described is subject to various modifications within the spirit of my invention and I do not wish to limit myself either as to structural details or as to any particular liquids with which my automatic valve is employed, except as indicated in the appended claims.

I claim:

1. In an automatic valve, the combination of a conduit for conducting liquid to a receptacle, a valve for stopping the flow of liquid therethrough, electrically operated means for closing the said valve, an auxiliary liquid receiving chamber, means for introducing liquid to said chamber when the said receptacle has received approximately the desired quantity of liquid and magnetic means disposed in said chamber and actuated by the flow of liquid thereto to energize said electrically operated means and close the said valve.

2. In an automatic valve, the combination of a conduit for conducting liquid to a receptacle, a valve for stopping the flow of liquid therethrough, electrically operated means for closing the said valve, switch means connecting said electrically operated means in circuit with a source of electric current, means for holding said switch means in normally open position to interrupt said circuit, an auxiliary liquid receiving chamber, means for introducing liquid to said chamber when the said receptacle has received approximately the desired quantity of liquid and magnetic means enclosed in said chamber and actuated by the flow of liquid thereto to attract and close said switch means.

3. In an automatic valve, the combination of a conduit for conducting liquid to a receptacle, a valve for stopping the flow of liquid therethrough, a float remote from the discharge end of said conduit, means actuated by said float and associated with said valve for closing the latter, and means for withdrawing liquid from the receptacle and conducting it to the said float to elevate the same when the desired liquid level therein has been reached including suction means communicating with the interior of the receptacle and actuated by the passage of liquid through said conduit.

4. In an automatic valve, the combination of a conduit for conducting liquid to a receptacle, a valve for stopping the flow of liquid therethrough, means associated with said valve for closing the same, said means having a magnetically actuated element, movable magnetic means adapted to be moved into actuating position in proximity to the said magnetically actuated element to attract and actuate the same whereby to close the said valve, and means for moving the said magnetic means into its said actuating position upon the rising of the liquid in the receptacle to the desired level.

5. In an automatic valve, the combination of a conduit for conducting liquid to a receptacle, a valve for stopping the flow of liquid therethrough, means associated with said valve for closing the same, said means having a magnetically actuated element, floatable magnetic means adapted to be floated into actuating position in proximity to the said magnetically actuated element to attract and actuate the same whereby to close the said valve, and means for conducting liquid to the said floatable magnetic means to float the same into its said actuating position upon the rising of the liquid in the receptacle to the desired level.

6. In an automatic valve, the combination of a conduit for conducting liquid to a receptacle, a valve for stopping the flow of liquid therethrough, means associated with said valve for closing the same, said means having a magnetically actuated element, floatable magnetic means adapted to be floated into actuating position in proximity to the said magnetically actuated element to attract and actuate the same whereby to close the said valve, and means for withdrawing liquid from the said receptacle and conducting it to the said floatable magnetic means to float the same into its said actuating position upon the rising of the liquid in the receptacle to the desired level.

7. In an automatic valve, the combination of a conduit for conducting liquid to a receptacle, a valve for stopping the flow of liquid therethrough, means associated with said valve for closing the same, said means having a magnetically actuated element, movable magnetic means adapted to be moved into actuating position in proximity to the said magnetically actuated element to attract and actuate the same whereby to close the said valve, and a float for moving the said magnetic means into its said actuating position.

8. In an automatic valve, the combination of a conduit for conducting liquid to a receptacle, a valve for stopping the flow of liquid therethrough, means associated with said valve for closing the same, said means having a magnetically actuated element, movable magnetic means adapted to be moved into actuating position in proximity to the said magnetically actuated ele-

ment to attract and actuate the same whereby to close the said valve, a float remote from the discharge end of said conduit for moving the said magnetic means into its said actuating position, and suction means, actuated by the passage of liquid through said conduit, for withdrawing liquid from the receptacle and conducting it to the float to elevate the same and move the magnetic means into actuating position to close the said valve.

9. In an automatic valve, the combination of a conduit for conducting liquid to a receptacle, a valve for stopping the flow of liquid therethrough, electrically operated means associated with the said valve for closing the same, an electric circuit leading to the said electrically operated means for operating the same, a switch in said circuit adapted to be closed magnetically, movable magnetic means adapted to be moved into actuating position in proximity to the said switch to attract and close the same, and means for moving the said magnetic means into its said actuating position upon the rising of the liquid in the receptacle to the desired level.

10. In an automatic valve, the combination of a conduit for conducting liquid to a receptacle, a valve for stopping the flow of liquid therethrough, electrically operated means associated with the said valve for closing the same, an electric circuit leading to the said electrically operated means for operating the same, a switch in said circuit adapted to be closed magnetically, movable magnetic means adapted to be moved into actuating position in proximity to the said switch to attract and close the same, a float remote from the discharge end of said conduit for moving the said magnetic means into its said actuating position, and suction means, actuated by the passage of liquids through said conduit, for withdrawing liquid from the receptacle and conducting it to the float to elevate the same and move the magnetic means into actuating position to close the said valve.

RALPH H. LACHMUND.