PCT WORLD INTELLECTUAL PROPERTY ORGANIZATION
International Bureau

INTERNATIONAL APPLICATION PUBLISHED UNDER THE PATENT COOPERATION TREATY (PCT)

(51) **International Patent Classification** 5 : **H04Q 7/30, H04L 1/00** — **A1**

(11) **International Publication Number:** **WO 95/01072**

(43) **International Publication Date:** 5 January 1995 (05.01.95)

(21) **International Application Number:** PCT/FI94/00280

(22) **International Filing Date:** 22 June 1994 (22.06.94)

(30) **Priority Data:**
932964 24 June 1993 (24.06.93) FI

(71) **Applicant** *(for all designated States except US)*: NOKIA TELECOMMUNICATIONS OY [FI/FI]; Mäkkylän puistotie 1, FIN-02600 Espoo (FI).

(72) **Inventor; and**
(75) **Inventor/Applicant** *(for US only)*: KOIVU, Vesa [FI/FI]; Haavikkotie 5 A 4, FIN-90630 Oulu (FI).

(74) **Agent:** OY KOLSTER AB; Iso Roobertinkatu 23, P.O. Box 148, FIN-00121 Helsinki (FI).

(81) **Designated States:** AU, CN, DE, GB, JP, NO, US, European patent (AT, BE, CH, DE, DK, ES, FR, GB, GR, IE, IT, LU, MC, NL, PT, SE).

Published
With international search report.
In English translation (filed in Finnish).

(54) **Title:** METHOD FOR MONITORING A CONNECTION BETWEEN A BASE STATION AND A TRANSCODER IN A CELLULAR RADIO NETWORK

(57) **Abstract**

The invention relates to a method for monitoring a connection between a base station (BTS) and a transcoder (TRCU) in a cellular radio network. Digital speech and/or data is transmitted in TRAU (Transcoder/Rate Adaptor Unit) frames according to GSM Recommendation 8.60, said frames being 320-bit speech and data frames containing synchronization bits, synchronization check bits, control bits and traffic bits. At the transmission end, a check value is calculated on the basis of at least the most significant traffic bits in the frame to be transmitted, using a given calculation algorithm. The calculated check value is inserted in such control bit locations for which no other use has been defined. At the reception end, transmission errors caused by the connection between the base station and the transcoder are monitored by means of said check value.

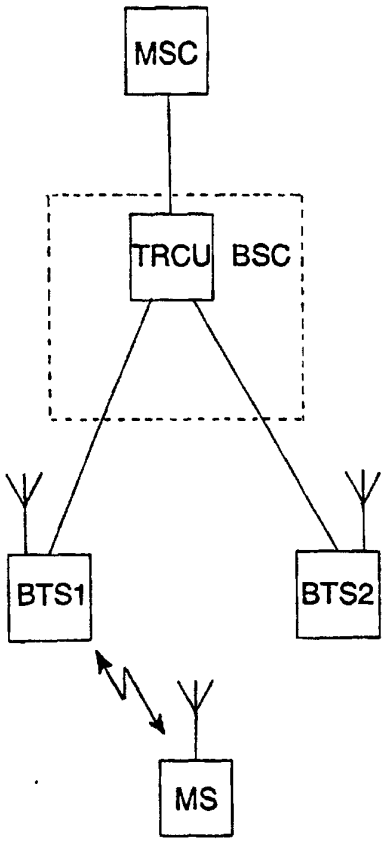

FOR THE PURPOSES OF INFORMATION ONLY

Codes used to identify States party to the PCT on the front pages of pamphlets publishing international applications under the PCT.

AT	Austria	**GB**	United Kingdom	**MR**	Mauritania
AU	Australia	**GE**	Georgia	**MW**	Malawi
BB	Barbados	**GN**	Guinea	**NE**	Niger
BE	Belgium	**GR**	Greece	**NL**	Netherlands
BF	Burkina Faso	**HU**	Hungary	**NO**	Norway
BG	Bulgaria	**IE**	Ireland	**NZ**	New Zealand
BJ	Benin	**IT**	Italy	**PL**	Poland
BR	Brazil	**JP**	Japan	**PT**	Portugal
BY	Belarus	**KE**	Kenya	**RO**	Romania
CA	Canada	**KG**	Kyrgystan	**RU**	Russian Federation
CF	Central African Republic	**KP**	Democratic People's Republic of Korea	**SD**	Sudan
CG	Congo			**SE**	Sweden
CH	Switzerland	**KR**	Republic of Korea	**SI**	Slovenia
CI	Côte d'Ivoire	**KZ**	Kazakhstan	**SK**	Slovakia
CM	Cameroon	**LI**	Liechtenstein	**SN**	Senegal
CN	China	**LK**	Sri Lanka	**TD**	Chad
CS	Czechoslovakia	**LU**	Luxembourg	**TG**	Togo
CZ	Czech Republic	**LV**	Latvia	**TJ**	Tajikistan
DE	Germany	**MC**	Monaco	**TT**	Trinidad and Tobago
DK	Denmark	**MD**	Republic of Moldova	**UA**	Ukraine
ES	Spain	**MG**	Madagascar	**US**	United States of America
FI	Finland	**ML**	Mali	**UZ**	Uzbekistan
FR	France	**MN**	Mongolia	**VN**	Viet Nam
GA	Gabon				

Method for monitoring a connection between a base station and a transcoder in a cellular radio network

The invention relates to a method for monitoring a connection between a base station and a transcoder in a cellular radio network, said method comprising transmitting digital speech and/or data in TRAU (Transcoder/Rate Adaptor Unit) frames according to GSM Recommendation 8.60, said frames being 320-bit speech and data frames containing synchronization bits, synchronization check bits, control bits and traffic bits.

The GSM (Global System for Mobile Communications) is a pan-European mobile telephone system which is evolving into a world-wide standard. Figure 1 shows the basic structural elements of the GSM system in a simplified manner without a detailed description of their properties or the other parts of the system. A mobile exchange MSC switches incoming and outgoing calls. Its functions are similar to those of an exchange in a public switched telephone network. In addition, the mobile exchange has functions typical of only mobile communications, such as subscriber location management. Mobile stations MS are connected to the exchange MSC by means of base station systems. A base station system comprises a base station controller BSC and base stations BTS. A base station controller BSC is used for controlling a plurality of base stations BTS.

The GSM system is entirely digital; even speech and data transmission are carried out entirely digitally. On account of capacity limitations on the radio path used, speech encoding is needed for speech transmission. In the network, various speech encoding and rate adaption functions are concentrated in one transcoder unit TRCU (Transcoder/Rate Adaptor Unit). The TRCU may

have several alternative locations in the system, depending on the choices made by the manufacturer. When the transcoder TRCU is positioned apart from the base station BTS, information is transmitted between the BTS and the transcoder in so-called TRAU frames of 320 bits. There are four different types of frames, classified by the information they contain: speech frames, operation and maintenance frames, data frames, and so-called idle speech frames.

Although the GSM recommendations define the structure of TRAU frames very accurately, the transmission link - often a fairly long one - between a base station BTS and a transcoder TRCU is hardly secured at all against bit errors. The control and synchronization bits of the TRAU frames are checked in some way at the reception end, but the actual "traffic bits" (speech/data) are not protected. The transmission link usually goes through a conventional public switched telephone network, in which a certain small number of bit errors is allowed, and thus even traffic bits are inevitably distorted. As a result of this, the quality of speech decreases (e.g. clinking sounds or other sidetones), and in the case of data transmission, at least the number of retransmissions increases.

The object of the present invention is to obviate the drawback described above.

This and other objects and advantages of the invention are achieved with a method of the type described in the introduction for monitoring a connection between a base station and a transcoder. The method according to the invention is characterized by

calculating a check value at the transmission end on the basis of at least the most significant traffic bits in the frame to be transmitted, using a given calculation algorithm,

inserting the calculated check value in such control bit locations of the frame for which no other use has been defined,

monitoring transmission errors caused by the connection between the base station and the transcoder by means of said check value at the reception end.

In GSM Recommendation 8.60, defining the format of TRAU frames, the use of given bits in the frame is left undefined. In the present invention, these undefined bits in the TRAU frames are used for monitoring the traffic between a base station and a transcoder unit. When assembling a TRAU frame, the base station and the transcoder calculate, in a suitable manner, a check value, which is inserted in these undefined bits. At the reception end, a corresponding check value is calculated and compared with the one calculated at the transmission end. If the reception end, on the basis of the check value, detects that a bit error has occurred, it can perform the procedures necessary for minimizing the effect of the error on the quality of the connection. The check value may be generated either on the basis of all bits of a TRAU frame, i.e. the control and the traffic bits, or on the basis of the traffic bits only. If desired, it is also possible to check only those traffic bits that are the most significant and the most essential for the quality of speech. The way in which the check value is generated is not essential to the invention. For this purpose, it is possible to use any suitable error correction or error indication algorithm.

In the following, the invention will be described in more detail by means of embodiments and with reference to the accompanying drawings, in which

Figure 1 illustrates the basic elements of the GSM radio system,

Figure 2 illustrates a TRAU speech frame according to GSM Recommendation 8.60,

Figure 3 illustrates a TRAU data frame according to GSM Recommendation 8.60, and

Figure 4 illustrates a TRAU operation and maintenance frame according to GSM Recommendation 8.60.

The basic structural elements of the GSM system and the TRAU frame are described in the GSM recommendations. As for a more accurate description of the GSM system, reference is made to the GSM recommendations and "The GSM System for Mobile Communications" by M. Mouly and M-B. Pautet, Palaiseau, France, 1992, ISBN: 2-9507190-0-7.

As stated above, when the transcoder TRCU is positioned apart from the base station BTS (e.g. in connection with the base station controller BSC or the exchange MSC, as in Figure 1), information is transmitted between the BTS and the transcoder in so-called TRAU frames of 320 bits. There are four different types of TRAU frames, classified by the information they contain: speech frames (Figure 2), data frames (Figure 3), operation and maintenance frames (Figure 4), and so-called idle speech frames. To enable synchronization, the first two octets in each frame contain 16 synchronization bits. In addition, the first bit of the 16-bit words (two octets) that form a frame is a synchronization check bit. In addition to traffic bits containing actual speech, data or operation and maintenance information, all frames comprise control bits, which transmit information on the type of the frame and a varying amount of other frame-type-specific information.

Figure 2 illustrates a speech frame which comprises 21 control bits C1-C21 and in which the last four bits T1-T4 are reserved for timing alignment. The bits carrying actual speech information are located in

octets 4 to 38. In practice, the speech information that is transmitted consists of LAR, RPE and LTP parameters of the RPE-LTP (Regular Pulse Excitation - Long Term Prediction) speech encoding method.

An idle speech frame is identical with the speech frame of Figure 2, except that all traffic bits of the frame are in logical state "1".

GSM Recommendation 8.60 defines control bits C17, C18, C19, C20 and C21 as spare bits. According to the invention, these control bits C17-C21 or some of them are used for monitoring the traffic between a base station BTS and a transcoder unit TRCU during speech transmission. In other respects, the frame and its processing are fully compatible with the GSM.

According to the invention, a check value is calculated at the transmission end (BTS or TRCU) on the basis of the bits in the frame, using a suitable calculation algorithm. It is not essential to the invention which calculation algorithm is used. Those skilled in the art know several error correction or error detection algorithms suitable for this purpose, for example the Reed-Solomon algorithms. Neither is it essential whether the check value is generated on the basis of all bits of the TRAU frame, i.e. the control and the traffic bits, or merely on the basis of the traffic bits. If desired, it is also possible to check only those traffic bits that are the most significant and the most essential for the quality of speech. The check value calculated at the transmission end is inserted in all or some of the control bit locations C17-C21 of the speech frame shown in Figure 2. At the reception end (BTS or TRCU), the check value is calculated on the basis of the same bits in the received frame, using the same algorithm as at the transmission end. The calculated check value is compared with the one calculated

at the transmission end, and if the comparison indicates a bit error, the error is corrected or its effect on the quality of the connection is minimized.

Figure 3 shows a TRAU data frame according to GSM Recommendation 8.60, comprising 15 control bits C1-C15. The recommendation defines bits C7, C8, C9, C10, C11, C12, C13, C14 and C15 as spare bits, for which no use has been assigned. The check bit according to the invention can be inserted in all or some of these control bit locations C7-C15.

Figure 4 shows an operation and maintenance frame according to GSM Recommendation 8.60, comprising 15 control bits C1-C15, which are all defined as spare bits, for which no use has been assigned. In addition, the six last bits S1-S6 in the frame are also defined as spare bits. The check value according to the invention can also be inserted in all or some of the control bit locations C5-C15, or alternatively, in all or some of the spare bit locations S1-S6.

The figures and the associated description are intended merely to illustrate the present invention. In its details, the method of the invention can be modified within the scope of the appended claims.

Claims

1. A method for monitoring a connection between a base station and a transcoder in a cellular radio network, said method comprising transmitting digital speech and/or data in TRAU (Transcoder/Rate Adaptor Unit) frames according to GSM Recommendation 8.60, said frames being 320-bit speech and data frames containing synchronization bits, synchronization check bits, control bits and traffic bits, c h a r a c t e r i z e d by

calculating a check value at the transmission end on the basis of at least the most significant traffic bits in the frame to be transmitted, using a given calculation algorithm,

inserting the calculated check value in such control bit locations of the frame for which no other use has been defined,

monitoring transmission errors caused by the connection between the base station and the transcoder by means of said check value at the reception end.

2. A method according to claim 1, c h a r a c - t e r i z e d in that the check value is inserted in all or some of the control bits C17, C18, C19, C20 and C21 of a speech frame according to GSM Recommendation 8.60.

3. A method according to claim 1, c h a r a c - t e r i z e d in that the check value is inserted in all or some of the control bits C7 to C15 of a data frame according to the GSM Recommendation.

4. A method according to claim 1, c h a r a c - t e r i z e d in that the check value is inserted in all or some of the control bits C5 to C15 of a use and maintenance frame according to the GSM Recommendation.

5. A method according to claim 1, c h a r a c t e r i z e d in that the check value is inserted in all or some of the spare bit locations S1 to S6 of a use and maintenance frame according to the GSM Recommendation.

6. A method according to any one of the preceding claims, c h a r a c t e r i z e d in that the check value is calculated on the basis of all traffic bits in the frame.

7. A method according to any one of claims 1 to 5, c h a r a c t e r i z e d in that the check value is calculated on the basis of all bits in the frame.

8. A method according to any one of the preceding claims, c h a r a c t e r i z e d by

calculating a check value at the reception end on the basis of the same bits in the received frame, using the same calculation algorithm as at the transmission end,

comparing the calculated check value with the check value calculated at the transmission end,

when the comparison indicates a bit error, correcting the error or minimizing its effect on the quality of the connection.

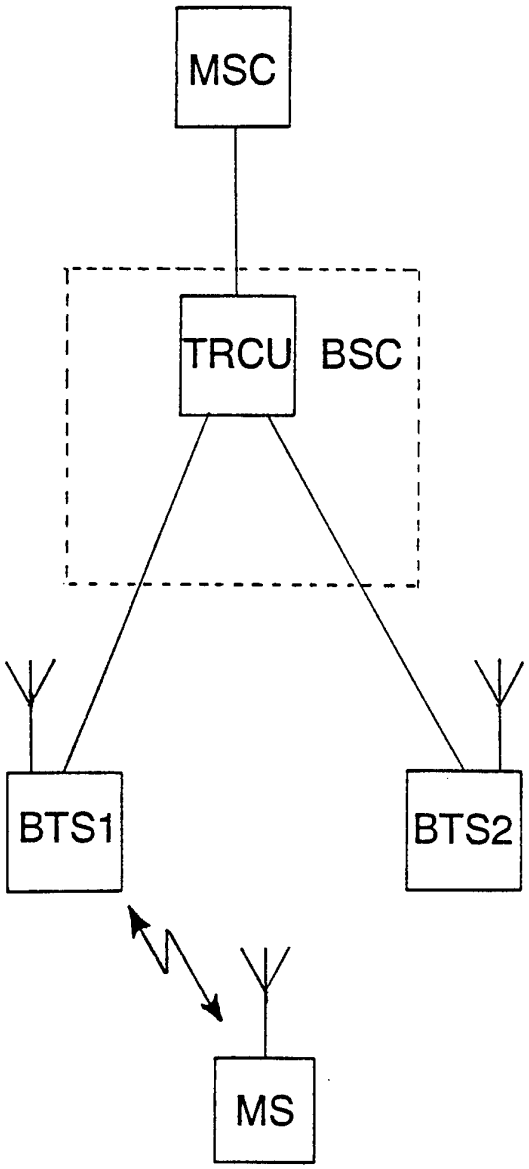

FIG. 1

Octet No.	Bit number							
	1	2	3	4	5	6	7	8
0	0	0	0	0	0	0	0	0
1	0	0	0	0	0	0	0	0
2	1	C1	C2	C3	C4	C5	C6	C7
3	C8	C9	C10	C11	C12	C13	C14	C15
4	1							
5								
6	1							
7								
8	1							
9								
10	1							
11								
12	1							
13								
14	1							
15								
16	1							
17								
18	1							
19								
20	1							
21								
22	1							
23								
24	1							
25								
26	1							
27								
28	1							
29								
30	1							
31								
32	1							
33								
34	1							
35								
36	1							
37								
38	1						C16	C17
39	C18	C19	C20	C21	T1	T2	T3	T4

FIG. 2

Octet No.	Bit number							
	1	2	3	4	5	6	7	8
0	0	0	0	0	0	0	0	0
1	0	0	0	0	0	0	0	0
2	1	C1	C2	C3	C4	C5	C6	C7
3	C8	C9	C10	C11	C12	C13	C14	C15
4	1							
5								
6	1							
7								
8	1							
9								
10	1							
11								
12	1							
13								
14	1							
15								
16	1							
17								
18	1							
19								
20	1							
21								
22	1							
23								
24	1							
25								
26	1							
27								
28	1							
29								
30	1							
31								
32	1							
33								
34	1							
35								
36	1							
37								
38	1							
39								

FIG. 3

Octet No.	Bit number							
	1	2	3	4	5	6	7	8
0	0	0	0	0	0	0	0	0
1	0	0	0	0	0	0	0	0
2	1	C1	C2	C3	C4	C5	C6	C7
3	C8	C9	C10	C11	C12	C13	C14	C15
4	1							
5								
6	1							
7								
8	1							
9								
10	1							
11								
12	1							
13								
14	1							
15								
16	1							
17								
18	1							
19								
20	1							
21								
22	1							
23								
24	1							
25								
26	1							
27								
28	1							
29								
30	1							
31								
32	1							
33								
34	1							
35								
36	1							
37								
38	1							
39			S1	S2	S3	S4	S5	S6

FIG. 4

INTERNATIONAL SEARCH REPORT

International application No.
PCT/FI 94/00280

A. CLASSIFICATION OF SUBJECT MATTER

IPC : H04Q 7/30T, H04L 1/00
According to International Patent Classification (IPC) or to both national classification and IPC

B. FIELDS SEARCHED

Minimum documentation searched (classification system followed by classification symbols)

IPC : H04Q, H04B, H04L

Documentation searched other than minimum documentation to the extent that such documents are included in the fields searched

SE,DK,FI,NO classes as above

Electronic data base consulted during the international search (name of data base and, where practicable, search terms used)

C. DOCUMENTS CONSIDERED TO BE RELEVANT

Category*	Citation of document, with indication, where appropriate, of the relevant passages	Relevant to claim No.
Y	GSM Recommendation 08.60 ETSI/PT 12 Cited in the application --	1-8
Y	Patent Abstracts of Japan, Vol 17,No 386, E-1401, abstract of JP, A, 5-68014 (NIPPON TELEGR & TELEPH CORP), 19 March 1993 (19.03.93) --	1-8
Y	EP, A3, 0471246 (MOTOROLA INC.), 19 February 1992 (19.02.92), column 4, line 53 - column 5, line 5, abstract --	1-8

[X] Further documents are listed in the continuation of Box C. [X] See patent family annex.

* Special categories of cited documents:
"A" document defining the general state of the art which is not considered to be of particular relevance
"E" erlier document but published on or after the international filing date
"L" document which may throw doubts on priority claim(s) or which is cited to establish the publication date of another citation or other special reason (as specified)
"O" document referring to an oral disclosure, use, exhibition or other means
"P" document published prior to the international filing date but later than the priority date claimed
"T" later document published after the international filing date or priority date and not in conflict with the application but cited to understand the principle or theory underlying the invention
"X" document of particular relevance: the claimed invention cannot be considered novel or cannot be considered to involve an inventive step when the document is taken alone
"Y" document of particular relevance: the claimed invention cannot be considered to involve an inventive step when the document is combined with one or more other such documents, such combination being obvious to a person skilled in the art
"&" document member of the same patent family

Date of the actual completion of the international search	Date of mailing of the international search report
21 October 1994	21 -10- 1994
Name and mailing address of the ISA/ Swedish Patent Office Box 5055, S-102 42 STOCKHOLM Facsimile No. +46 8 666 02 86	Authorized officer Bengt Jonsson Telephone No. +46 8 782 25 00

INTERNATIONAL SEARCH REPORT

International application No.
PCT/FI 94/00280

C (Continuation). DOCUMENTS CONSIDERED TO BE RELEVANT

Category*	Citation of document, with indication, where appropriate, of the relevant passages	Relevant to claim No.
Y	Patent Abstracts of Japan, Vol 10,No 20, E-376, abstract of JP, A, 60-182230 (NIPPON DENSHIN DENWA KOSHA), 17 Sept 1985 (17.09.85)	1-8
Y	EP, A3, 0117595 (PHILIPS ELECTRONIC AND ASSOCIATED INDUSTRIES LIMITED), 5 Sept 1984 (05.09.84), page 4, line 12 - line 14; page 5, line 37 - page 6, line 2; page 9, line 35 - page 10, line 9	1-8
A	EP, A3, 0535812 (NOKIA MOBILE PHONES LIMITED), 7 April 1993 (07.04.93), column 2, line 49 - column 3, line 7; column 2, line 13 - line 21	1-8

INTERNATIONAL SEARCH REPORT

Information on patent family members

01/10/94

International application No.
PCT/FI 94/00280

Patent document cited in search report	Publication date	Patent family member(s)	Publication date
EP-A3- 0471246	19/02/92	AU-B- 641521	23/09/93
		AU-A- 8034991	20/02/92
		US-A- 5111454	05/05/92
EP-A3- 0117595	05/09/84	SE-T3- 0117595	
		AU-B- 567464	19/11/87
		AU-A- 2488484	30/08/84
		CA-A- 1225713	18/08/87
		GB-A- 2136248	12/09/84
		JP-A- 59193647	02/11/84
		US-A- 4618955	21/10/86
EP-A3- 0535812	07/04/93	GB-A- 2260244	07/04/93
		JP-A- 5219025	27/08/93