US 20150276357A1

(19) United States

(12) Patent Application Publication

(10) Pub. No.: US 2015/0276357 A1

(43) Pub. Date: Oct. 1, 2015

Peterson et al.

(54) **ARCHERY TARGET WITH MODULAR CONSTRUCTION**

(71) Applicant: **Matrix Targets LLC**, Worden, MT (US)

(72) Inventors: **Kevin D. Peterson**, Worden, MT (US); **Kevin G. Peterson**, Manhattan Beach, CA (US)

(73) Assignee: **Matrix Targets LLC**, Worden, MT (US)

(21) Appl. No.: **14/225,256**

(22) Filed: **Mar. 25, 2014**

Publication Classification

(51) **Int. Cl.**
F41J 3/00 (2006.01)

(52) **U.S. Cl.**
CPC ***F41J 3/0004*** (2013.01)

(57) **ABSTRACT**

A modular archery target comprising a plurality of hexagonal prismatic foam segments and a plurality of rhomboidal prismatic foam segments configured to form an archery target in the shape of a single hexagonal prism. Each of the hexagonal prismatic foam segments and each of the rhomboidal prismatic foam segments is replaceable, interchangeable and reversible, and each of the hexagonal prismatic foam segments is also rotatable. Each of the hexagonal prismatic foam segments and each of the rhomboidal prismatic foam segments is preferably comprised of flexible, self-healing polyurethane foam.

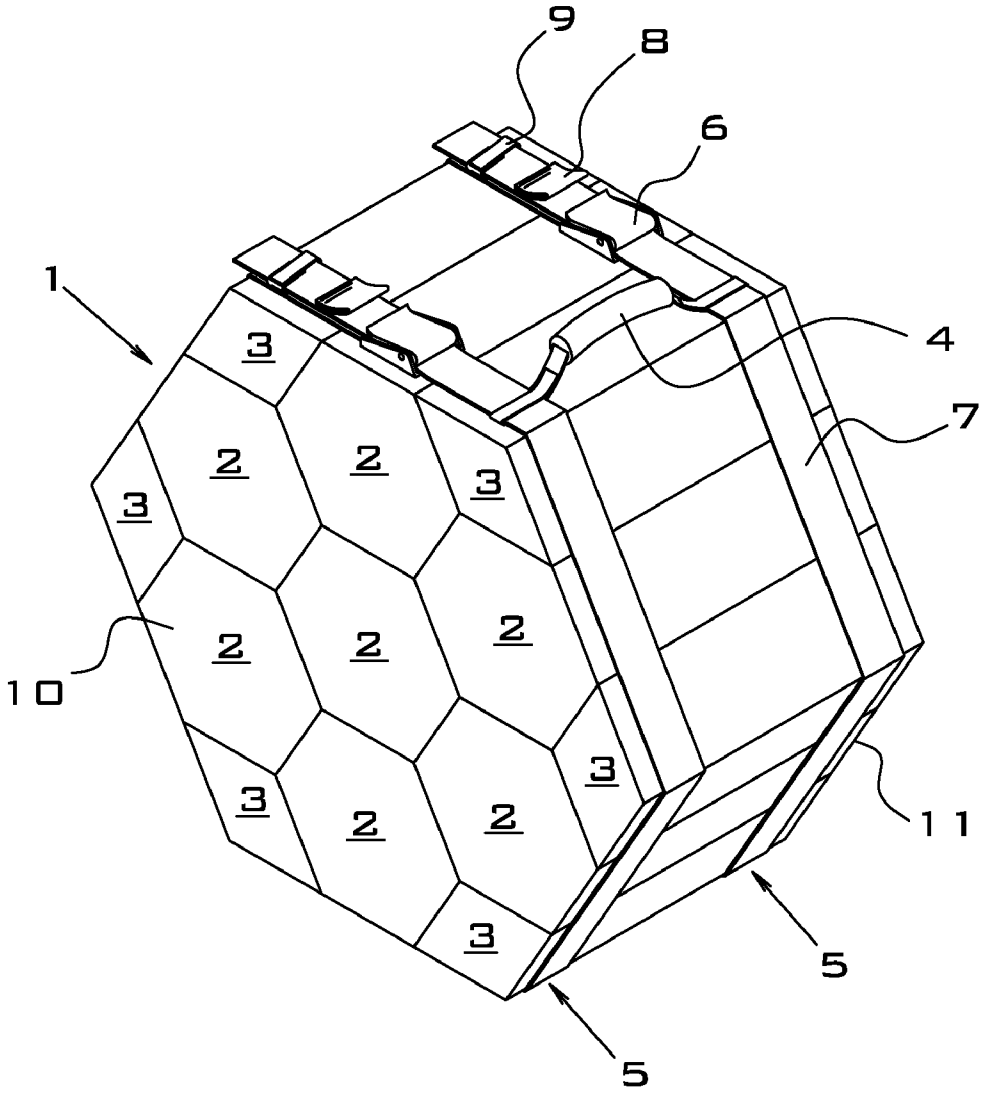

FIGURE 2

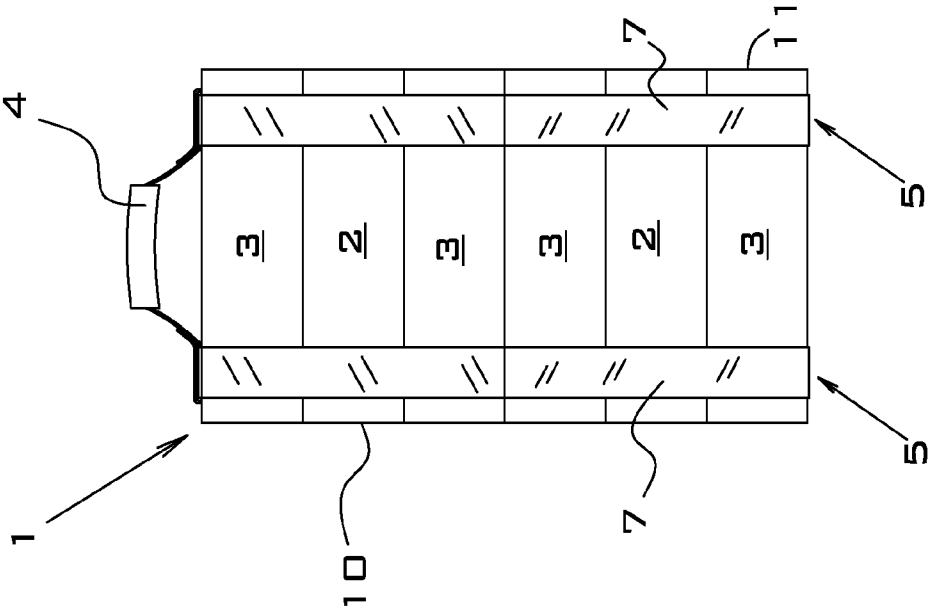

FIGURE 1

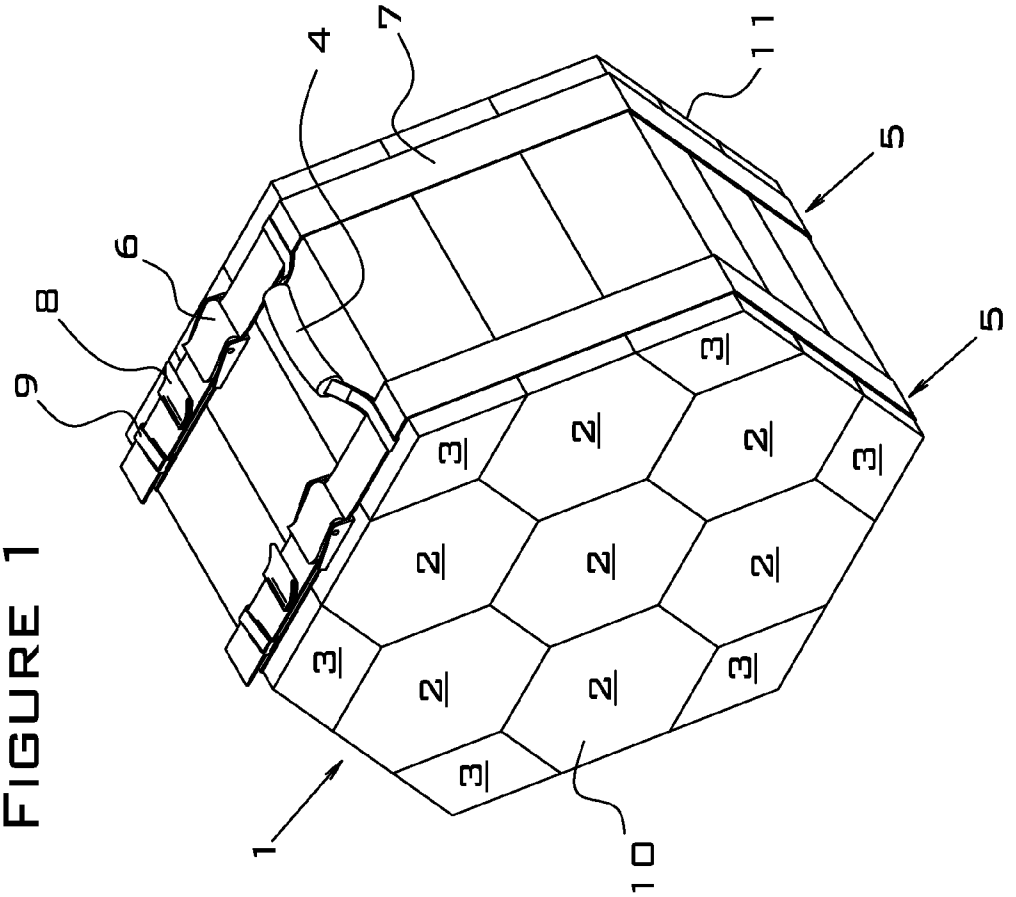

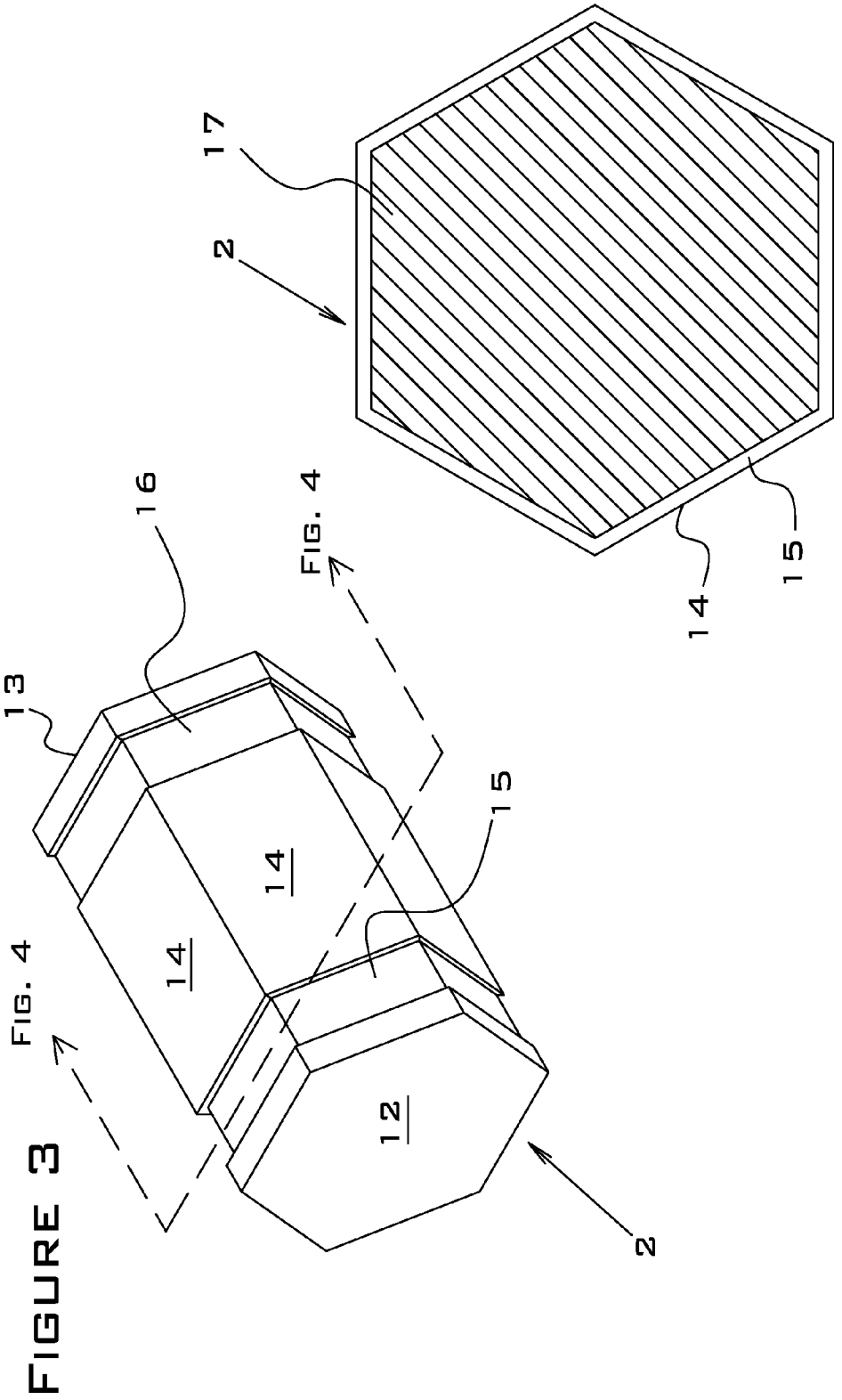

FIGURE 3

FIGURE 4

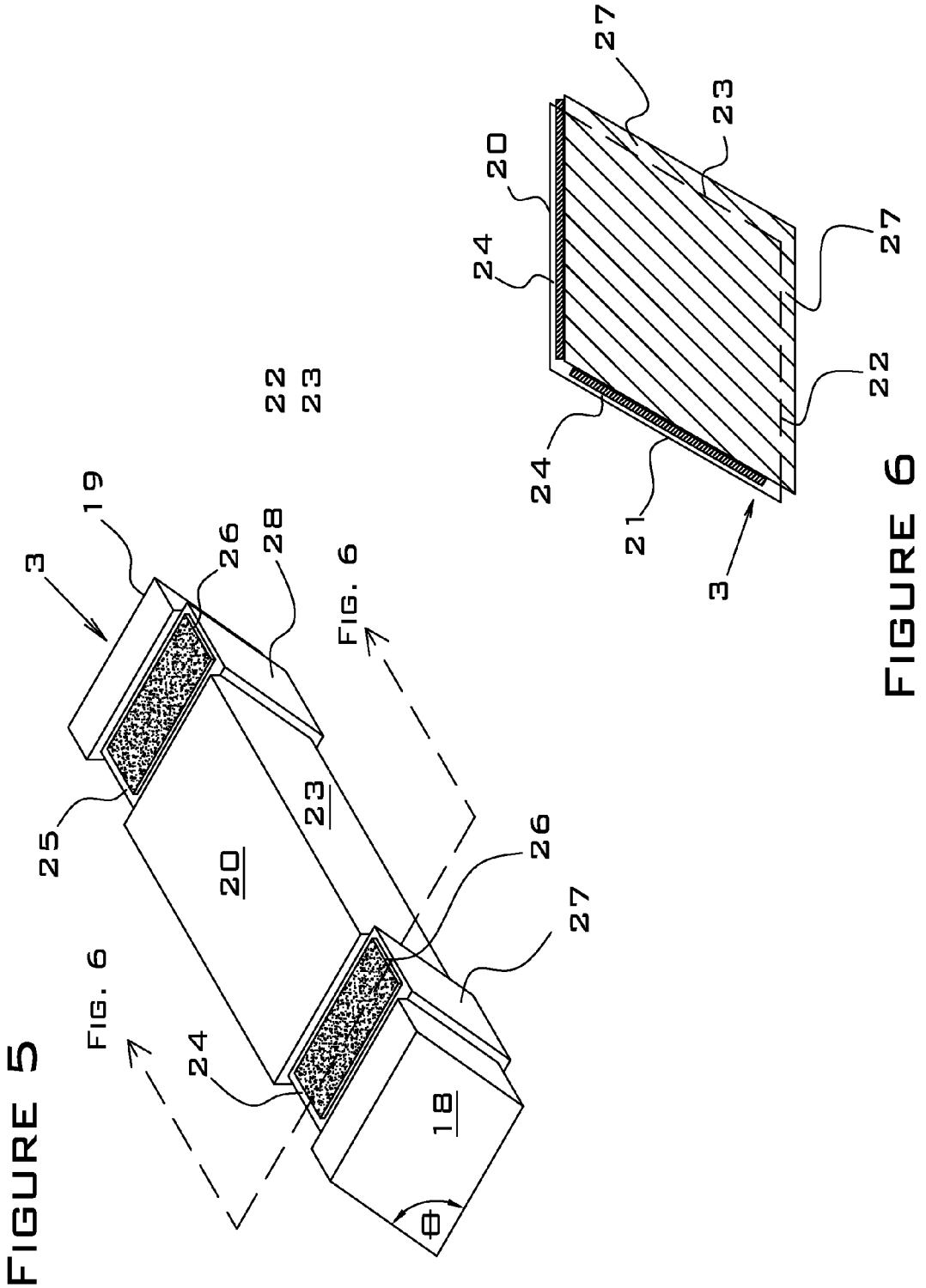

FIGURE 5

FIGURE 6

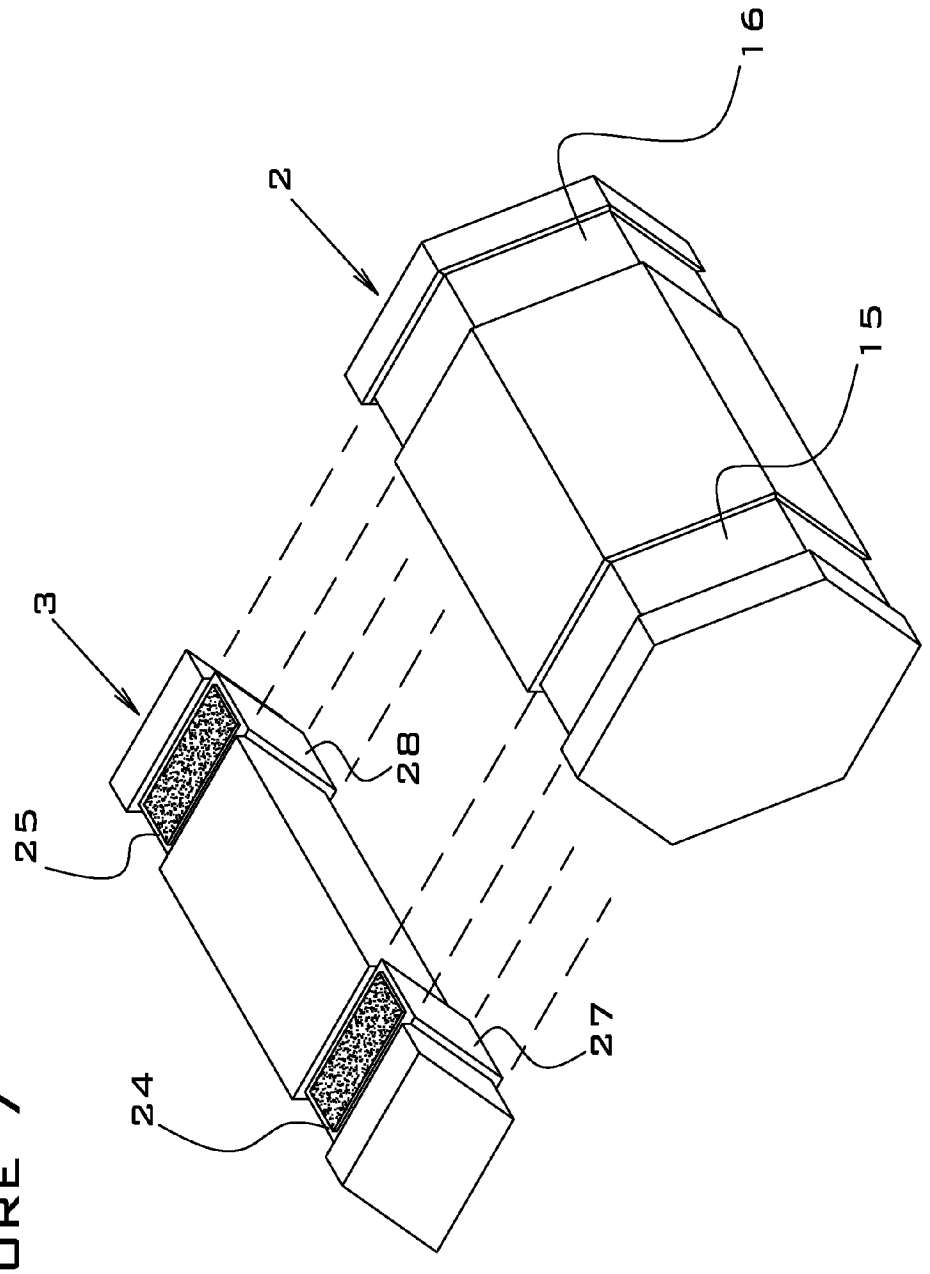

FIGURE 7

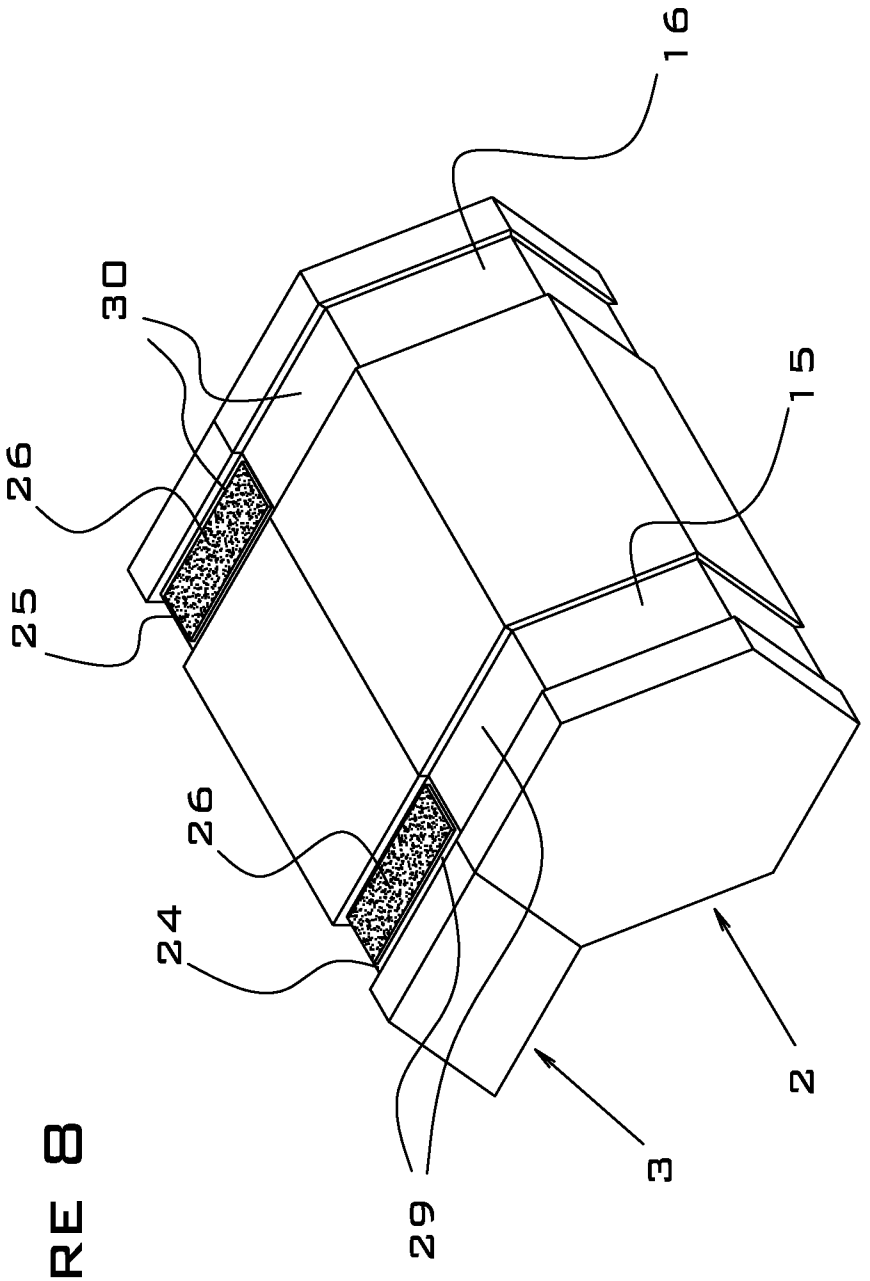

FIGURE 8

FIGURE 9

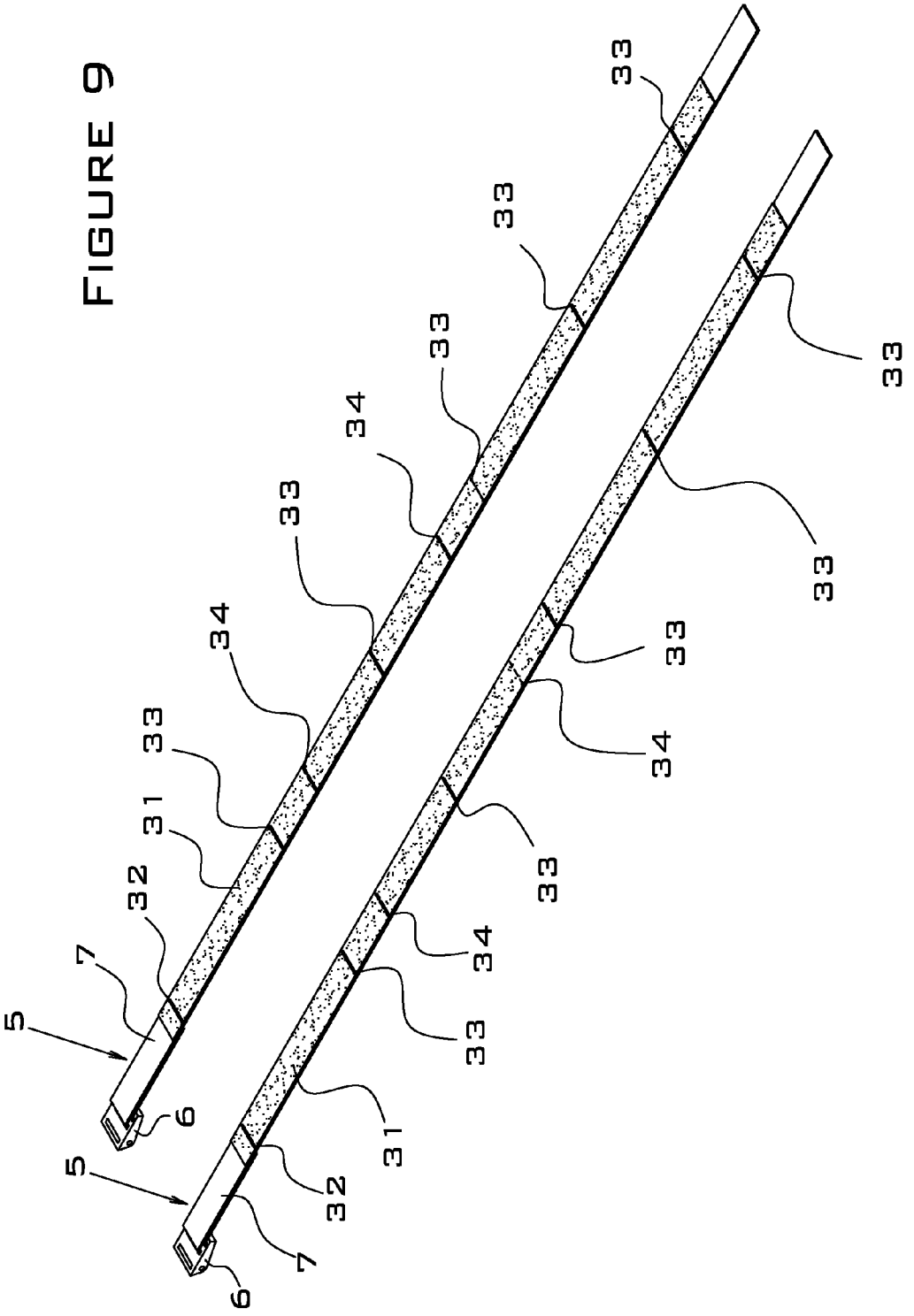

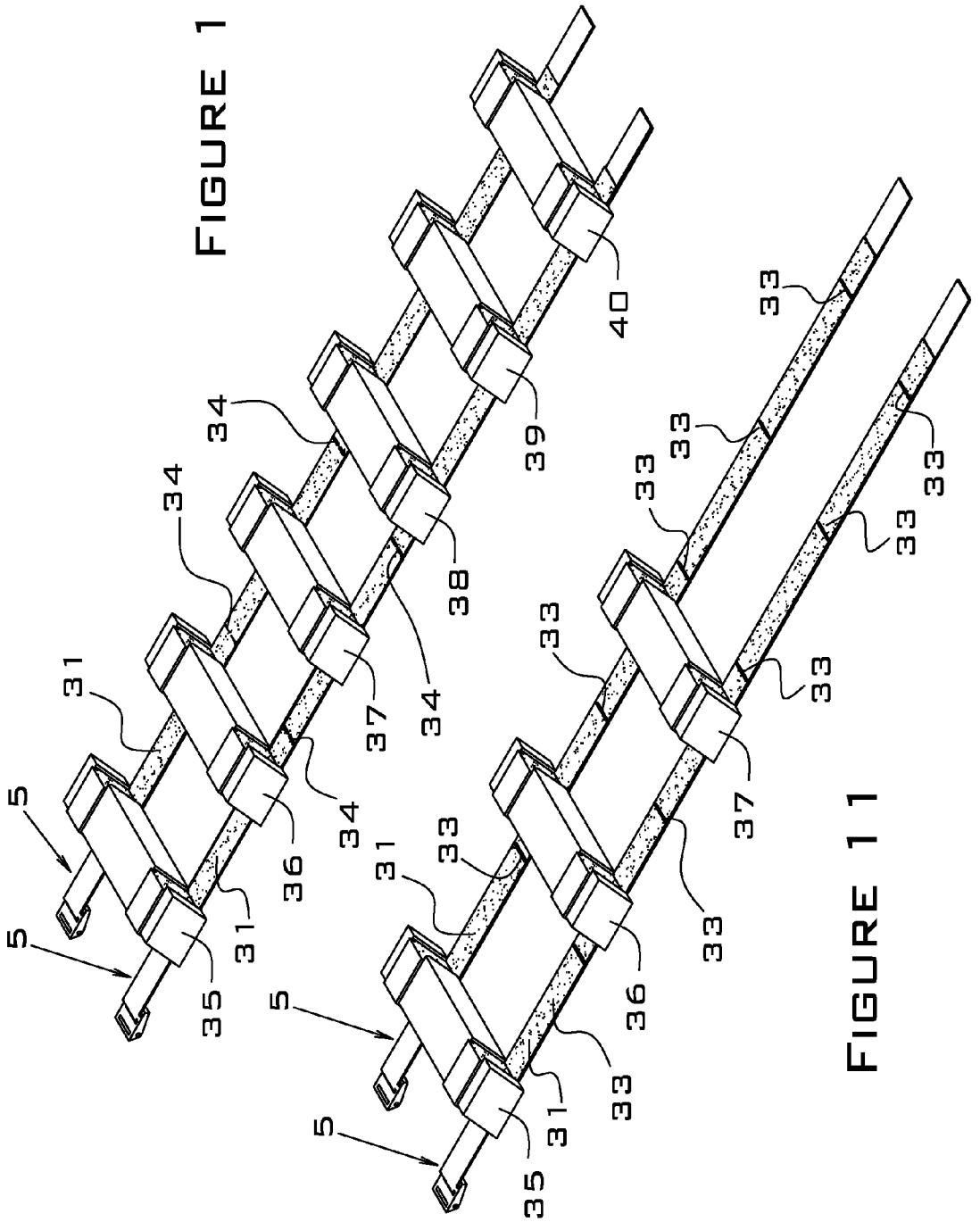

FIGURE 10

FIGURE 11

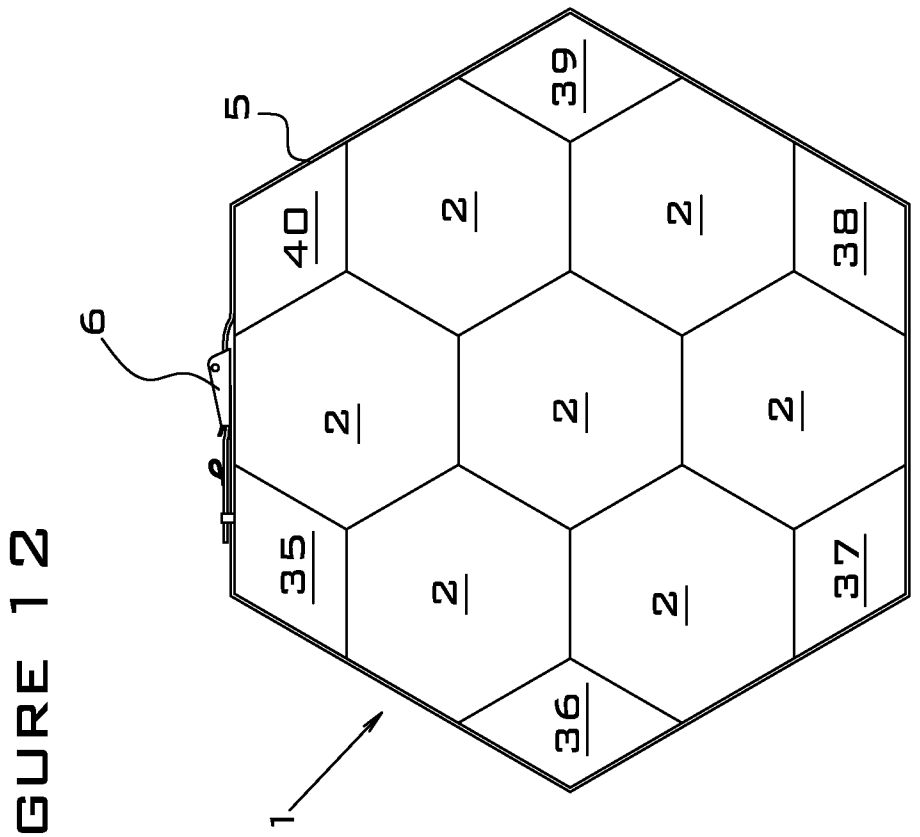

FIGURE 12

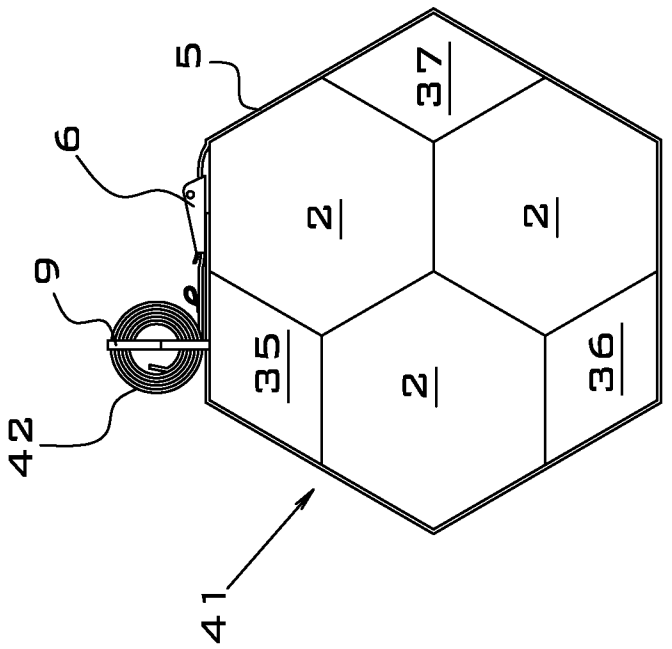

FIGURE 13

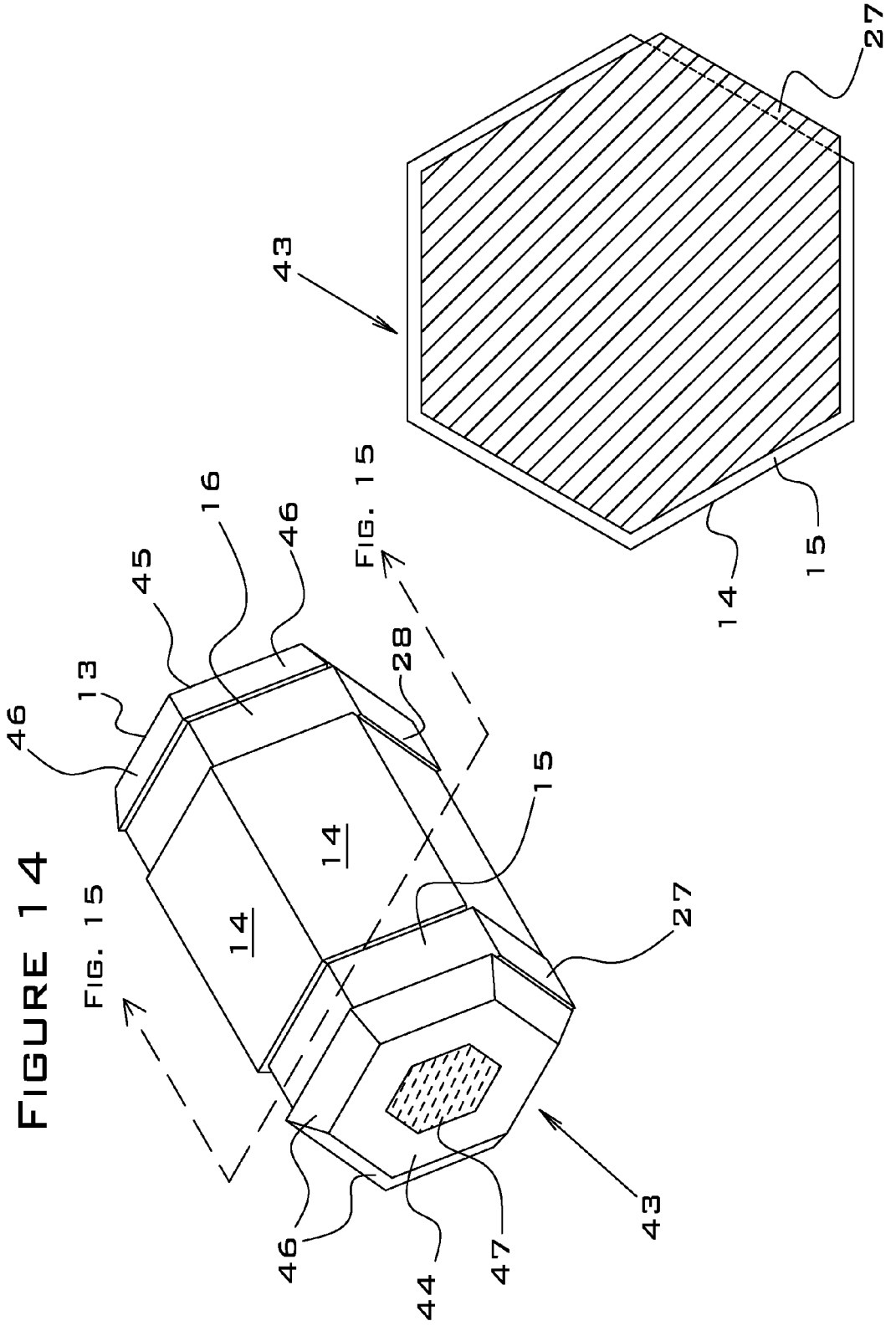

FIGURE 14

FIGURE 15

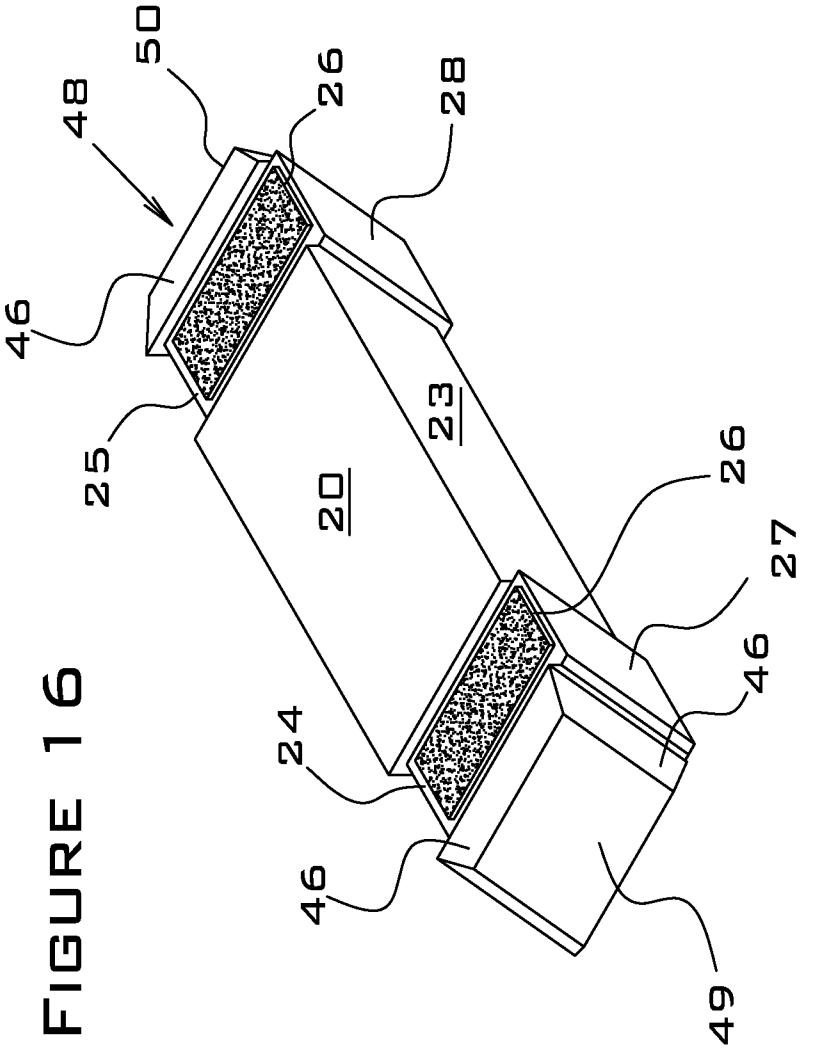

FIGURE 16

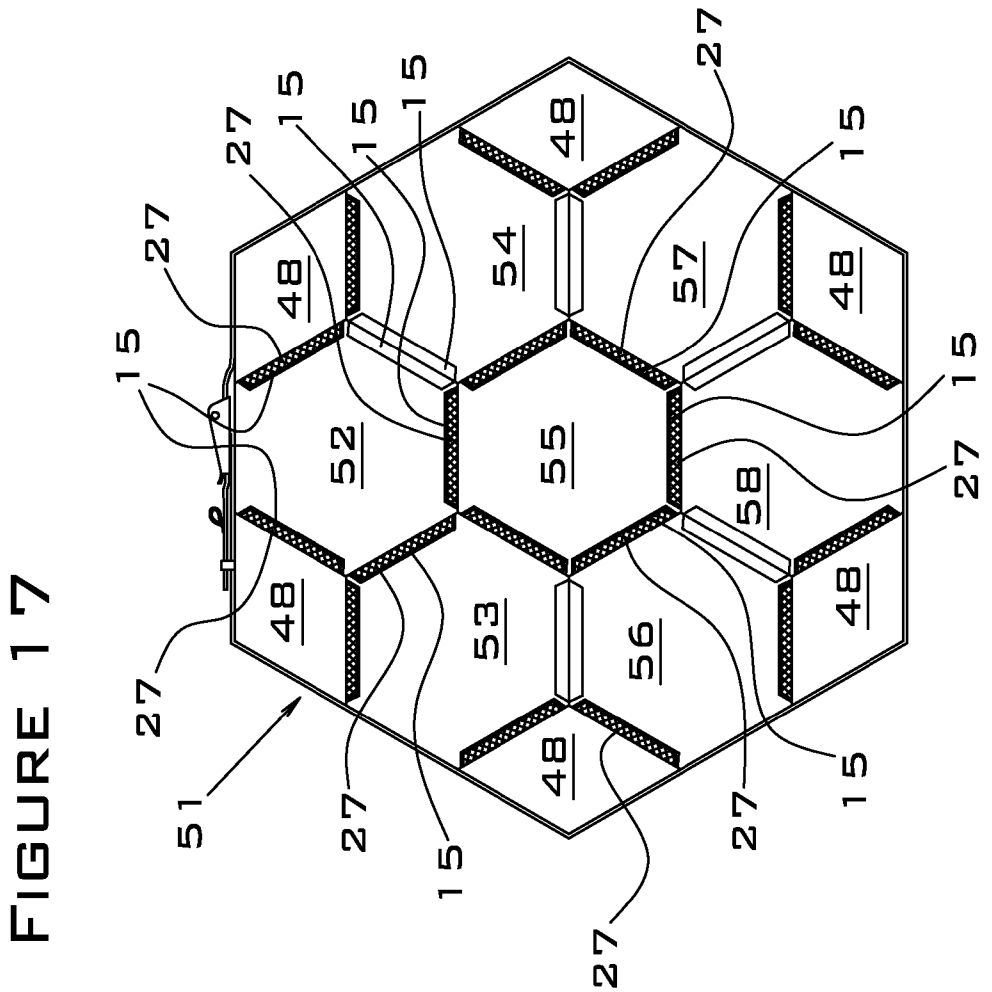

FIGURE 17

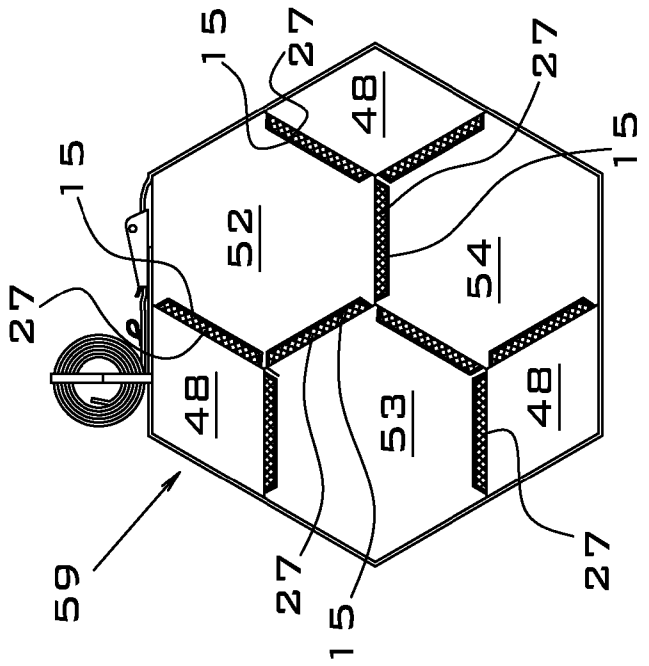

FIGURE 18

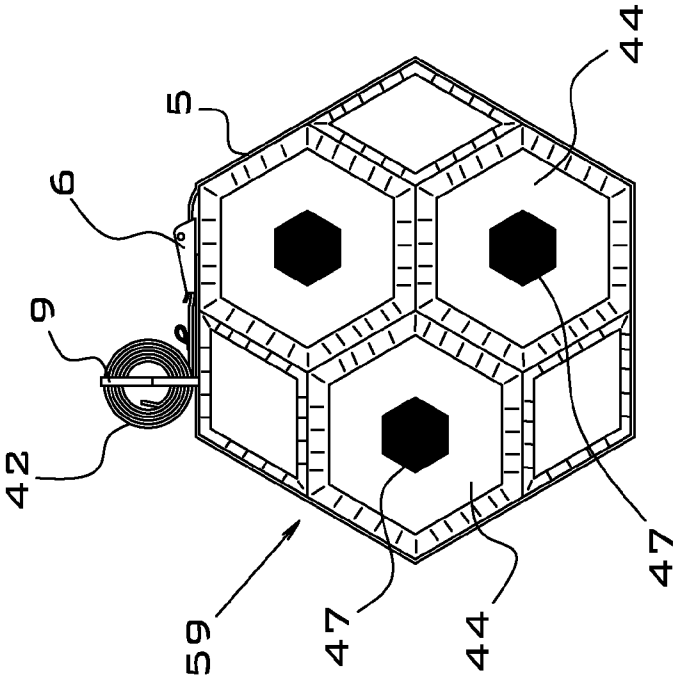

FIGURE 20

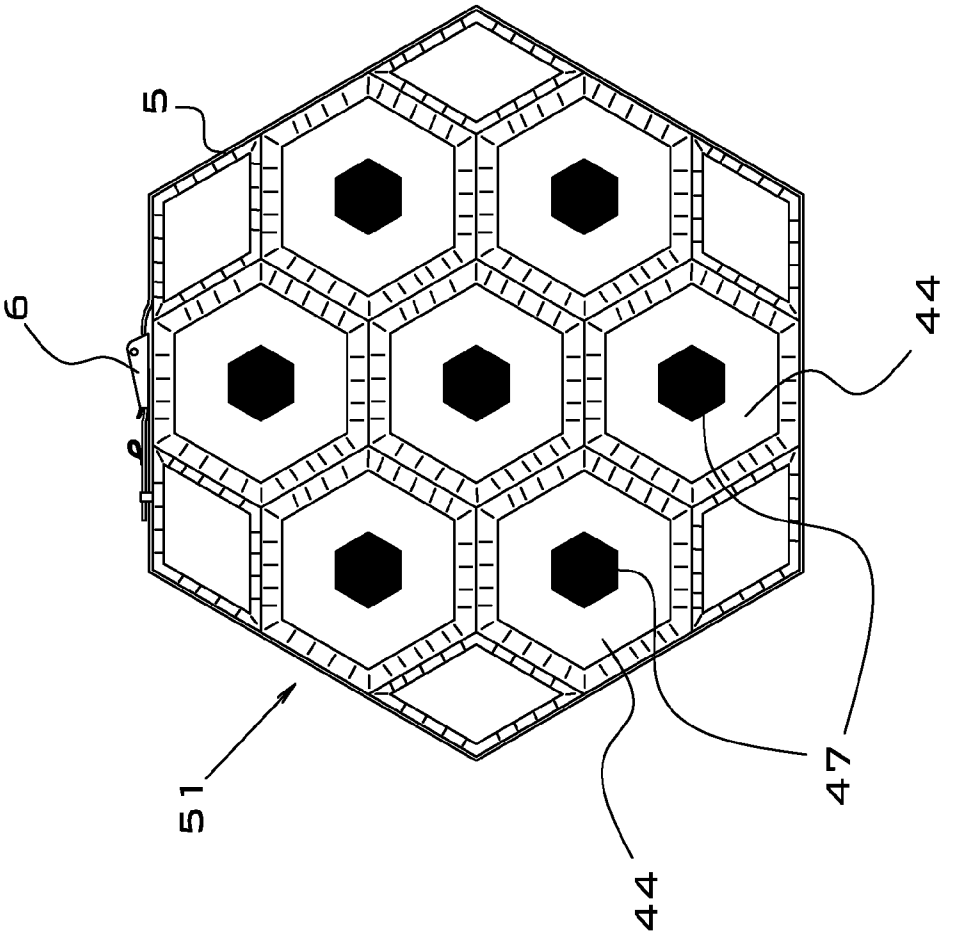

FIGURE 19

ARCHERY TARGET WITH MODULAR CONSTRUCTION

BACKGROUND OF THE INVENTION

[0001] 1. Field of the Invention

[0002] The invention relates to the field of archery targets, and more particularly, archery targets with replaceable and interchangeable modular target segments.

[0003] 2. Description of the Related Art

[0004] There are a number of archery targets that are the subject of issued patents or pending applications, and also multiple examples of commercially available archery targets, but none of these inventions or products includes the novel features of the present invention. The present invention incorporates an array of target segments that are comprised of multiple identical rhomboidal prismatic pieces and identical hexagonal prismatic pieces that are held together by a pair of encircling compression straps, and further interlocked by tongue-and-groove connections. (As used herein, the term "prismatic" means a solid having bases or ends that are parallel, congruent polygons and sides that are parallelograms.) The target segments, which are manufactured from polymer foam, are replaceable and interchangeable, and the target face is reversible. A standard-size target may be quickly converted to a compact-size target by removing some of the target segments and readjusting the compression straps. The present invention is suitable for use with target points, broadhead points, and other types of arrow points.

[0005] U.S. Pat. No. 3,329,431 (Roesner, 1967) discloses a target made of multiple packets, wherein each packet is comprised of excelsior (wood shavings) wrapped in paper. Multiple packets of the excelsior/paper material are bound together to form three replaceable and interchangeable segments that are vertically stacked and held together by binding cords. The invention comprises a non-detachable carrying strap that passes through the target horizontally between the upper and the center segments. The stacked segments are enclosed within a cover bag. Unlike the present invention, the segments of the Roesner invention cannot be easily and quickly replaced because removal of the cover bag and the untying and retying of the binding cords are required to replace a target segment. In addition, the binding cords and carrying strap of the Roesner invention, because of their locations across the front of the target face, are subject to damage from arrow strikes. Finally, the excelsior material, unlike the polymer foam of the present invention, is not suitable for use with broadhead arrows, nor would it be durable in wet outdoor conditions.

[0006] U.S. Pat. No. 4,066,261 (Stewart, 1978) discloses a target of sandwich-type construction, with the front and rear faces comprised of self-closing expanded polyethylene and the center layer comprised of expanded polystyrene. The invention comprises a replaceable center section also comprised of three layers. Unlike the present invention, the center section of the Stewart invention is not interchangeable with other segments of the target.

[0007] U.S. Pat. No. 4,239,236 (Parham et al., 1980) discloses a pillow-like pad that may be installed as an accessory on the rear face of a target having a replaceable center segment. This invention is designed to stop arrows from passing through the center section of a target when the replaceable center plug has become weakened due to repeated arrow strikes, thereby extending the useful life of the target. The pad is preferably comprised of loosely woven polyester batting material enclosed within a fabric bag. The structure of the Parham invention is highly dissimilar to that of the present invention.

[0008] U.S. Pat. No. 8,376,365 (Walker, 2013) discloses a target comprising a rotatable and replaceable center member. Like the present invention, the center member may be comprised of polymer foam, but unlike the present invention, the center member is not interchangeable with other members of the device. The Walker invention optionally comprises tongue-and-groove connections around the outer perimeter of the rectangular targets to locate and position the targets within a larger multiple-target frame. In contrast, the tongue-and-groove connections of the present invention are used to lock internal target segments together, in order to help resist the shear forces produced by arrow strikes.

[0009] U.S. Pat. No. 8,382,116 (Harris, 2013) discloses a modular target suitable for use with multiple arrow types. This invention comprises a polymer outer shell and a replaceable inner core. The inner core may be comprised of an outer bag filled with polymer strips for use with target arrows; alternately, the inner core may be comprised of a solid block or laminated pieces of polymer foam for use with broadhead arrows. The Harris invention does not comprise multiple identical target segments or an encircling compression strap that are components of the present invention.

[0010] U.S. Pat. No. 3,382,117 (Harris, 2013) discloses modular archery targets similar to those disclosed in U.S. Pat. No. 8,382,116 and also discloses another type of target that comprises concentric replaceable target elements on the front face of the target. The concentric elements are replaceable, but, unlike the present invention, the Harris invention does not comprise multiple, identical target segments.

[0011] U.S. Pat. No. 4,195,839 (Rodrigue, 1980) discloses an archery target that comprises bundled rod elements enclosed within a peripheral compression ring that is apparently non-removable. The rod elements are replaceable, but, unlike the present invention, damaged elements are discarded rather than relocated to another spot within the target. The rod elements are designed so that arrows pass between adjacent rods rather than penetrating the rods. Also, unlike the present invention, the rear faces of the rods are secured to an enclosed backplate so that the target is not reversible.

[0012] U.S. Pat. No. 4,235,444 (Meyer, 1980) discloses a target comprised of multiple layers of material in series so that arrows penetrate a variety of materials having different coefficients of friction. The present invention, in contrast, is comprised of homogeneous target segments.

[0013] U.S. Pat. No. 4,813,684 (Bruno, 1989) discloses an archery target comprising multiple replaceable cardboard strip elements that are compressed within a rigid rectangular frame. Unlike the present invention, the Bruno invention is neither weatherproof nor compatible with broadhead arrows.

[0014] U.S. Pat. No. 4,940,244 (Batts, III, 1990) discloses an archery target comprising multiple replaceable corrugated cardboard elements that are compressed within a rigid side frame supports. Unlike the present invention, the Bruno invention is neither weatherproof nor compatible with broadhead arrows.

[0015] U.S. Pat. No. 5,465,977 (Mann, 1995) discloses an archery target comprising multiple stacked sheets of carpet that are held together with a perimeter compression band. One embodiment of the invention comprises a top-mounted

carrying handle. The compression bands are not removable, nor are the carpet layers replaceable or interchangeable by a user.

[0016] U.S. Pat. No. 5,865,440 (Pulkrabek, 1999) discloses an archery target comprising stacked layers of polymer foam sheets, in which the layers are held in compression by bands that are attached while the foam layers are compressed by a hydraulic press. Unlike the present invention, the Pulkrabek invention requires a baling assembly, a 20-ton hydraulic press, and rigid top and bottom platens for compression during assembly, which makes replacement of damaged layers very difficult compared to the present invention, which requires no external compression equipment.

[0017] U.S. Pat. No. 6,799,764 (Ingold, 2004) discloses an archery target comprised of stacked layers of polymer foam or other materials with rigid end plates. The compression bands are replaceable, but, unlike the present invention, the foam elements are not replaceable.

[0018] U.S. Pat. No. 7,222,860 (Box et al., 2007) discloses an archery target comprised of stacked layers of compressed foam in combination with rigid end plates that are longer than the foam sheets. Unlike the present invention, the foam layers are not described as being replaceable.

[0019] U.S. Pat. No. 7,464,938 (Anderson, Jr., 2008) discloses an archery target comprised of stacked layers of polymer foam, wherein the foam layers are bonded together by melting the outer surfaces of the layers prior to stacking and by pushing a heated rod through the layers after stacking in order to cause fusing of the layers. In this invention, the foam layers are not replaceable or interchangeable.

[0020] U.S. Pat. D525,312 (Rinehart, 2006) is a design patent for a polyhedral-shaped target with multiple faces, having targets on a plurality of the multiple faces. U.S. Pat. D532,050 (Juarez, 2006) is a design patent for a polyhedral-shaped mobile archery target.

[0021] In addition to the U.S. patents and patent applications described above, there are several commercial products that have some superficial similarity to the present invention but are highly dissimilar in structure. A first example of a commercial product is the Delta McKenzie SHOT-BLOCKER® (Easton Technical Products, Dike, Iowa), which is comprised of three replaceable and rotatable rectangular foam blocks. This product advertises WELDED CORE™ construction that "eliminates the need for platens, plates, cables, wires, straps, or bands." The Crossbow model advertises "an easy strap-and-snap buckle system (that) allows shooters to quickly replace or rotate target sections in just minutes." Unlike the present invention, these products require an outer fabric cover and are not adjustable for size. In addition, unlike the present invention, the target sections of these products are not connected with tongue-and-groove fittings.

[0022] A second example of a commercial product is the BRICK WALL™ target and arrow backstop sold by Rinehart Targets (Janesville, Wis.). These products consist of multiple stacked rectangular blocks of self-healing foam material. The blocks may be rotated or interchanged. There is no mention of tongue-and-groove connections or an encircling compression strap being incorporated into this product in the manufacturer's specifications or advertisements.

BRIEF SUMMARY OF THE INVENTION

[0023] The present invention is a modular archery target comprising a plurality of hexagonal prismatic foam segments and a plurality of rhomboidal prismatic foam segments configured to form an archery target in the shape of a single hexagonal prism, wherein each of the hexagonal prismatic foam segments and each of the rhomboidal prismatic foam segments is replaceable, interchangeable and reversible, and wherein each of the hexagonal prismatic foam segments is also rotatable. In a preferred embodiment, each of the hexagonal prismatic foam segments and each of the rhomboidal prismatic foam segments is comprised of flexible, self-healing polyurethane foam.

[0024] In a preferred embodiment, each of the hexagonal prismatic foam segments comprises a first channel and a second channel positioned around a perimeter of the hexagonal prismatic foam segment, wherein the first channel and the second channel are parallel to each other; wherein each of the rhomboidal prismatic foam segments comprises a first side face, a second side face, a third side face, and a fourth side face; wherein each of the rhomboidal prismatic foam segments comprises a first channel in the first side face of the rhomboidal prismatic foam, segment and a second channel in the second side face of the rhomboidal prismatic foam segment, and wherein the first side face and the second side face are adjacent side faces; wherein each of the rhomboidal prismatic foam segments further comprises a first protrusion located on the third side face of the rhomboidal prismatic foam segment and a second protrusion located on the fourth side face of the rhomboidal prismatic foam segment, wherein the third side face and the fourth side face are adjacent side faces; and wherein the protrusions on the rhomboidal prismatic foam segments, together with the channels on the hexagonal prismatic foam segments, form a tongue-and-groove connection between the rhomboidal prismatic foam segments and the hexagonal prismatic foam segments.

[0025] In a preferred embodiment, the invention further comprises a pair of compression straps, wherein the channels on the hexagonal prismatic foam segments and the channels on the rhomboidal prismatic foam segments form continuous channels that extend around a perimeter of the single hexagonal prism and wherein the compression straps fit within the continuous channels. Preferably, a first portion of a hook-and-loop fastener is attached to a bottom of the first channel on each of the rhomboidal prismatic foam segments and a bottom of the second channel on each of the rhomboidal prismatic foam segments, and each of the compression straps has an underside, wherein the underside of the compression strap comprises a second portion of a hook-and-loop fastener, and wherein the second portion of the hook-and-loop fastener on the underside of the compression strap adheres to the first portion of the hook-and-loop fastener on the rhomboidal prismatic foam segments.

[0026] In a preferred embodiment, each of the hexagonal prismatic foam segments and each of the rhomboidal prismatic foam segments comprises a front face having beveled edges and a rear face having beveled edges, wherein the beveled edges on the front face form a raised surface on the front face of each hexagonal prismatic foam segment and each rhomboidal prismatic foam segment, and wherein the beveled edges on the rear face form a raised surface on the rear face of each hexagonal prismatic foam segment and each rhomboidal prismatic foam segment. Optionally, each of the hexagonal prismatic foam segments comprises a high-contrast, hexagonal focal point on a front face of the hexagonal prismatic foam segment. Optionally, each of the hexagonal

prismatic foam segments comprises a high-contrast, hexagonal focal point on a rear face of the hexagonal prismatic foam segment.

[0027] In an alternate embodiment, each of the hexagonal prismatic foam segments comprises a first side face, a second side face, a third side face, a fourth side face, a fifth side face, and a sixth side face; wherein each of the hexagonal prismatic foam segments comprises a first channel and a second channel that extend around the first side face, the second side face, the third side face, the fourth side face, and the fifth side face of the hexagonal prismatic foam segment, and wherein the first channel and the second channel are parallel to each other; wherein each of the hexagonal prismatic foam segments comprises a protrusion located on a sixth side face of the hexagonal prismatic foam segment; and wherein the protrusions and channels on the hexagonal prismatic foam segments form a tongue-and-groove connection between adjacent hexagonal prismatic foam segments.

BRIEF DESCRIPTION OF THE DRAWINGS

[0028] FIG. **1** is an isometric view of the present invention, shown fully assembled in standard size.

[0029] FIG. **2** is a right side view of the present invention.

[0030] FIG. **3** is an isometric view of a single hexagonal target segment.

[0031] FIG. **4** is a transverse cross-section view of the hexagonal segment shown in FIG. **3**.

[0032] FIG. **5** is an isometric view of a single diamond-shaped target segment.

[0033] FIG. **6** is a transverse cross-section view of the segment shown in FIG. **5**.

[0034] FIG. **7** is an isometric view of a diamond-shaped segment and an adjacent hexagonal segment, shown separated.

[0035] FIG. **8** is an isometric view of a diamond-shaped segment and an adjacent hexagonal segment, shown connected.

[0036] FIG. **9** is an isometric view of a pair of identical compression straps laid out with their outer sides face down.

[0037] FIG. **10** is an isometric view of the compression straps shown in FIG. **9**, with six diamond-shaped segments attached over the appropriate locating marks shown in FIG. **9** to assemble a standard-size target.

[0038] FIG. **11** is an isometric view of the compression straps shown in FIG. **9**, with three diamond-shaped segments attached over the appropriate locating marks shown in FIG. **9** to assemble a compact-size target.

[0039] FIG. **12** is a from view of the present invention in standard size.

[0040] FIG. **13** is a front view of the present invention in compact size.

[0041] FIG. **14** is an isometric view of a single hexagonal segment of the alternate embodiment.

[0042] FIG. **15** is a transverse cross-section view of a hexagonal segment of the alternate embodiment.

[0043] FIG. **16** is an isometric view of a single diamond-shaped segment of the alternate embodiment.

[0044] FIG. **17** is a cut-away front view of the alternate embodiment shown in standard size.

[0045] FIG. **18** is a cut-away front view of the alternate embodiment shown in compact size.

[0046] FIG. **19** is a front view of the alternate embodiment shown in standard size.

[0047] FIG. **20** is a front view of the alternate embodiment shown incompact size.

REFERENCE NUMBERS

[0048] **1** Modular archery target, standard size

[0049] **2** Hexagonal prismatic foam segment, hexagonal segment

[0050] **3** Rhomboidal prismatic foam segment, diamond-shaped segment

[0051] **4** Removable carrying handle

[0052] **5** Compression strap assembly

[0053] **6** Cam-type buckle

[0054] **7** Webbing

[0055] **8** Stop loop

[0056] **9** Keeper

[0057] **10** Front face of target

[0058] **11** Rear face of target

[0059] **12** Front face of hexagonal segment

[0060] **13** Rear face of hexagonal segment

[0061] **14** Side face of hexagonal segment

[0062] **15** First channel of hexagonal segment

[0063] **16** Second channel of hexagonal segment

[0064] **17** Interior of hexagonal segment

[0065] **18** Front face of diamond-shaped segment

[0066] **19** Rear face of diamond-shaped segment

[0067] **20** First side face of diamond-shaped segment

[0068] **21** Second side face of diamond-shaped segment

[0069] **22** Third side face of diamond-shaped segment

[0070] **23** Fourth side face of diamond-shaped segment

[0071] **24** First channel of diamond-shaped segment

[0072] **25** Second channel of diamond-shaped segment

[0073] **26** Hook and loop fastener, loop portion

[0074] **27** First protrusion

[0075] **28** Second protrusion

[0076] **29** First continuous channel

[0077] **30** Second continuous channel

[0078] **31** Hook-and-loop fastener, hook portion

[0079] **32** First locating mark

[0080] **33** Second locating mark

[0081] **34** Third locating mark

[0082] **35** First diamond-shaped segment

[0083] **36** Second diamond-shaped segment

[0084] **37** Third diamond-shaped segment

[0085] **38** Fourth diamond-shaped segment

[0086] **39** Fifth diamond-shaped segment

[0087] **40** Sixth diamond-shaped segment

[0088] **41** Modular archery target, compact size

[0089] **42** Roll of excess compression strap

[0090] **43** Hexagonal segment, alternate embodiment

[0091] **44** Front face of hexagonal segment, alternate embodiment

[0092] **45** Rear face of hexagonal segment, alternate embodiment

[0093] **46** Beveled edge

[0094] **47** High-contrast aiming point

[0095] **48** Diamond-shaped segment, alternate embodiment

[0096] **49** Front face of diamond-shaped segment, alternate embodiment

[0097] **50** Rear face of diamond-shaped segment, alternate embodiment

[0098] **51** Modular archery target, alternate embodiment, standard size

[0099] **52** First hexagonal segment, alternate embodiment

[0100] **53** Second hexagonal segment, alternate embodiment

[0101] **54** Third hexagonal segment, alternate embodiment

[0102] **55** Fourth hexagonal segment, alternate embodiment

[0103] **56** Fifth hexagonal segment, alternate embodiment

[0104] **57** Sixth hexagonal segment, alternate embodiment

[0105] **58** Seventh hexagonal segment, alternate embodiment

[0106] **59** Modular archery target, alternate embodiment, compact size

DETAILED DESCRIPTION OF INVENTION

[0107] The present invention is a novel archery target in the shape of a regular hexagonal prism, having two hexagonal faces designed to serve as shooting surfaces. The present invention comprises an array of target segments that are comprised of multiple identical rhomboidal prismatic pieces and multiple identical hexagonal prismatic pieces. Protrusions along the perimeter of the rhomboidal segments mate with indentations along the perimeter of the hexagonal segments to form tongue-and-groove connections between adjacent rhomboidal and hexagonal segments. In addition, friction between all adjacent segments is enhanced by two compression straps with cam-type buckles that encircle the assembled target segments. The combination of tongue-and-groove connections plus friction connections provides superior resistance to slippage of the target segments when the target is struck by an arrow, compared to the simple friction-fit connections of the prior art.

[0108] Each compression strap comprises a strip of the hook portion of a hook-and-loop fastener along the inner surface of the strap that adheres to strips of loop portions of hook-and-loop fasteners that are manufactured into the outer surfaces of the rhomboidal segments, thereby providing a removable bonding mechanism between the compression straps and the rhomboidal segments. The present invention may also comprise an optional carrying handle that may be removably attached to the compression straps. Stop loops sewn onto the webbing of the straps prevent the ends of the straps from slipping out of the buckles when the straps are loosened. A strip of hook-and-loop fastener is sewn onto the webbing of each strap to neatly retrain excess lengths of webbing. The size of a target can be optionally reduced by removing some of the target segments and reassembling the remaining segments into a smaller hexagonal configuration. The target segments may be manufactured in a single uniform color; optionally, the segments may be made in a variety of colors, thereby allowing a shooter to more readily identify a particular segment as a desired target.

[0109] The target segments, which are manufactured from polymer foam, are replaceable and interchangeable, the hexagonal segments are rotatable, and the target face is reversible (i.e., either the front or rear face of the invention may be used as the target face). In a preferred method of manufacture, the segments are injection molded, and the loop portion of the hook-and-loop fasteners is bonded onto the surface of the rhomboidal segments during the injection molding process. The segments are preferably comprised of flexible, self-healing polyurethane foam. The foam is specifically designed to withstand heavy use with broadhead as well as target-point arrows, while at the same time allowing relatively easy withdrawal of arrows from the target.

[0110] The details of the present invention are described more fully below in reference to FIGS. **1** through **13**.

[0111] FIG. **1** is an isometric view and FIG. **2** is a right side view of the modular archery target **1** in standard size. Major components of the modular archery target **1** shown in FIGS. **1** and **2** include a plurality of right regular hexagonal prismatic foam segments (also referred to as hexagonal segments) **2**, a plurality of right rhomboidal prismatic foam segments (also referred to as diamond-shaped segments) **3**, an optional removable carrying handle **4**, and two compression strap assemblies **5**. Each compression strap assembly **5** is comprised of a cam-type buckle **6**, a strip of webbing **7**, a stop loop **8**, and a keeper **9**. When assembled as shown, the hexagonal segments **2** and the diamond-shaped segments **3** are stacked together horizontally so that the modular target **1** has a hexagonal-shaped from face **10** and an identical rear face **11**. Arrows may be shot into either the front face **10** or the rear face **11** of the modular target **1**.

[0112] The removable carrying handle **4** attaches to the modular target **1** by hook-and-loop fastener strips at each end of the handle **4** that pass around the two strips of webbing **7**. The removable handle **4** is superior to the prior art because the handle **4** can be installed to transport the target and then can be removed to shoot at the target, thereby preventing accidental damage to the handle **4** from arrow strikes. The grip of the removable handle **4** may be comprised of polymer or any other conventional handle material. The buckles **6** are preferably made from polymer and are preferably attached to the webbing by sewing. One example of a suitable commercially available cam-type buckle is part number 29705T31 available from McMaster-Carr Supply Company, Los Angeles, Calif. The webbing **7** is preferably comprised of woven polymer fiber, such as polypropylene. In a preferred embodiment, the webbing is two inches wide and 1/16-inch thick. The stop loops **8** are loops of webbing material sewn to the webbing **7** that prevent the webbing **7** from slipping completely through the cam buckles **6** when the buckles **6** are opened. The keeper **9** is a strip of hook-and-loop fastener material that is used to neatly store excess rolled-up length of webbing **7**, as shown more clearly in FIG. **13**. The keeper **9** is preferably sewn to the webbing **7**.

[0113] FIG. **3** is an isometric view of a single hexagonal segment **2**, and FIG. **4** is a transverse cross-section view of the hexagonal segment **2** shown in FIG. **3**. The plane of the front face **12** and the plane of the rear face **13** are perpendicular to the plane of each identical side face **14**. As shown in FIG. **3**, each hexagonal segment **2** comprises a pair of identical channels consisting of a first channel **15** and a second channel **16** positioned around the perimeter of the segment **2**. The sides of the channels **15**, **16** are parallel to the line formed by the edges of the faces **12**, **13** and the front and rear edges of the sides **14** into which each channel is formed. In a preferred embodiment, each hexagonal segment **2** has a length along the long axis (front to rear) of 14 inches, and a length of each hexagonal edge of 4⅝ inches. The edge of the first channel **15** nearest the front face **12** is set back one inch from the from face **12**, and the edge of the second channel **16** nearest the rear face **13** is set back one inch from the rear face **13**. The width of the channels **15**, **16** is 2 1/16 inches, and the depth of the channels **15**, **16** is ¼ inch. The channels **15**, **16** form a portion of the tongue-and-groove interlock system between hexagonal and diamond-shaped segments, as is described more fully in reference to FIG. **7**.

[0114] FIG. **4** shows the continuous shape formed by the first channel **15** around the perimeter of the segment **2**. Also, as shown, the interior **17** of the segment **2** is homogeneous.

[0115] FIG. **5** is an isometric view of a single diamond-shaped segment **3**, and FIG. **6** is a transverse cross-section view of the segment **3** shown in FIG. **5**. The plane of the front face **18** and the plane of the rear face **19** are perpendicular to the plane of each side face **20**, **21**, **22**, and **23**. As shown in FIGS. **5** and **6**, each diamond-shaped segment **3** comprises a pair of identical channels consisting of a first channel **24** and a second channel **25**. The channels **24**, **25** are manufactured into the two adjacent side faces **20**, **21**. Each channel **24**, **25** has a strip of hook-and-loop fastener (loop portion) **26** attached to the bottom surface of the channel.

[0116] Each diamond-shaped segment **3** also comprises an identical pair of protrusions consisting of a first protrusion **27** and a second protrusion **28**. The protrusions **27**, **28** are located on the two adjacent side faces **22**, **23**. In a preferred embodiment, the longitudinal length of each diamond-shaped segment is 14 inches, each side length is 4⅝ inches, and the acute angle θ is 60 degrees. The edges of the channels and protrusions are set back one inch from the ends of the side faces **20-23** and have widths of 2 1/16 inches. The channels have depths of ¼-inch, and the protrusions have heights of ¼-inch.

[0117] FIG. **7** is an isometric view of a diamond-shaped segment **3** and an adjacent hexagonal segment **2**, shown separated. The dashed lines illustrate how the protrusions **27**, **28** of the diamond-shaped segment **3** fit into the channels **15**, **16**, respectively, of the hexagonal segment **2**, forming a tongue-and-groove connection between the segments **2**, **3** when the two segments **2**, **3** are brought together.

[0118] FIG. **8** is an isometric view of a diamond-shaped segment **3** and an adjacent hexagonal segment **2** similar to the view shown in FIG. **7**, except shown with the two segments **2**, **3** connected. As shown, the first channel **24** of the diamond-shaped segment **3** and the first channel **15** of the hexagonal segment **2** are aligned so as to form a first continuous channel **29**, and similarly, the second channel **25** of the diamond-shaped segment and the second channel **16** of the hexagonal segment are aligned to form a second continuous channel **30**. When the complete modular target **1** (shown in FIG. **1**) is assembled from a plurality of hexagonal segments **2** and diamond-shaped segments **3**, the continuous channels **29**, **30** extend around the perimeter of the target **1** and serve as positioning guide channels for the compression strap assemblies **5** shown in FIG. **1**. The hook-and-loop fasteners (loop portion) **26** shown in FIG. **8** attach to hook-and-loop fasteners (hook portion) on the underside of the compression straps, as described in detail in reference to the following FIGS. **9-11**.

[0119] FIGS. **9** through **13** illustrate the assembly of the present invention from the various components. As previously described, the components of a standard-size target may be reassembled to form a compact-size target by removing some of the diamond-shaped and hexagonal segments. The same compression straps are used for both size targets.

[0120] FIG. **9** is an isometric view of a pair of identical compression straps **5** laid out with their inner sides facing up. This layout is the first step in assembling either size target. As shown, each compression strap **5** comprises a strip of hook-and-loop fastener (hook portion) **31** attached to the underside of the webbing **7**. In a preferred embodiment, the hook-and-loop fasteners **31** are attached to the webbing **7** by adhesive bonding. The hook-and-loop fasteners **31** comprise painted-on (or otherwise applied) locating marks **32-34** that show the proper placement for the diamond-shaped segments. The first locating marks **32** are used to position the diamond-shaped segments for either size target. The second locating marks **33** are used to position the diamond-shaped segments that comprise a standard-size target, as shown in FIG. **10**. Third locating marks **34** are used to position the diamond-shaped segments that comprise a small-size target, as shown in FIG. **11**.

[0121] FIG. **10** is an isometric view of the compression straps **5** shown in FIG. **9**, with six diamond-shaped segments **35-40** attached over the locating marks **32**, **33** shown in FIG. **9**. This is the second step in assembling a standard-size target. The unused locating marks **34** are visible. The hook-and-loop fasteners (loop portion) **26** (shown in FIG. **7**) of the segments **35-40** adhere to the hook-and-loop fasteners (hook portion) **31** of the compression straps **5**, thereby locking the segments **35-40** in their proper positions along the length of the compression straps **5**. This configuration of six diamond-shaped segments is used to assemble a standard-size target, as shown in FIG. **12**.

[0122] FIG. **11** is an isometric view of the compression straps **5** shown in FIG. **9**, with three diamond-shaped segments **35-37** attached over the locating marks **32**, **34** shown in FIG. **9**. This is the second step in assembling a small-size target. The unused locating marks **33** are visible. The diamond-shaped segments **35-37** are attached to the compression straps **5** identically to the method described in relation to FIG. **10**. This configuration of three diamond-shaped segments is used to assemble a small-size target, as shown in FIG. **13**.

[0123] The third step in assembling a target (not shown) consists of setting hexagonal segments between the diamond-shaped segments that are shown in FIGS. **9** and **10** and then rolling the components up into a hexagonal shape and securing the compression straps. FIG. **12** is a front view of a standard-size modular target **1**, shown fully assembled after the third assembly step. The positions of the diamond-shaped segments **35-40** as shown in FIG. **12** correspond to the positions shown for these segments along the length of the compression straps **5** shown in FIG. **10**. As shown, the standard-size target **1** is comprised of seven hexagonal segments **2** in addition to the six diamond-shaped segments **35-40**. The hexagonal segments **2** may be rotated, reversed, interchanged, or replaced as needed after loosening the compression straps **5**. Note that it is not necessary to remove the compression straps **5** in order to reverse, interchange, or replace one or more of the hexagonal segments. The diamond-shaped segments **35-40** may be reversed, interchanged or replaced after opening and removing the compression straps **5**.

[0124] FIG. **13** is a front view of the modular target **41** in compact size, shown fully assembled after the third assembly step. The positions of the diamond-shaped segments **35-37** as shown in FIG. **13** correspond to the positions shown for these segments along the length of the compression straps **5** shown in FIG. **11**. As shown, the small-size modular target **41** is comprised of three hexagonal segments **2** in addition to the three diamond-shaped segments **35-37**. The hexagonal segments **2** may be rotated, reversed, interchanged, or replaced as needed after loosening the compression straps **5**. Note that it is not necessary to remove the compression straps **5** in order to reverse, interchange, or replace one or more of the hexagonal segments. The diamond-shaped segments **35-37** may be reversed, interchanged or replaced after opening the compression straps **5**.

[0125] Because the same compression straps **5** are used for both the standard-size target **1** and the compact-size target **41**, but the perimeter length of the compact-size target is less than the perimeter length of the standard-size target, there will be an unused length of the compression straps **5** when the compact-size target **41** is assembled. As shown in FIG. **13**, this excess length may be stored by forming it into rolls **42** and securing the rolls **42** to the tops of the compression strap assemblies **5** with the keepers **9**.

[0126] An alternate embodiment of the present invention is described below in reference to FIGS. **14-20**. The purpose of the alternate embodiment is to provide a target assembly having stronger connections between the center segment and surrounding segments as compared to the first embodiment. The alternate embodiment may be assembled so as to provide a standard-size target. The standard-size target may be quickly convened to a compact-size target by removing some of the target segments and readjusting the compression straps. The alternate embodiment comprises a plurality of diamond-shaped and hexagonal-shaped prismatic segments, wherein the front and rear face of each segment comprises beveled edges, thereby providing three-dimensional front and rear target surfaces for the assembled modular target. The front and rear face of each hexagonal segment comprise a high-contrast, painted-on (or otherwise applied) hexagonal focal point. The raised surface and high-contrast focal point on each end of each of the hexagonal segments serve to provide a plurality of visually sharp and precise aiming points on the target assembly.

[0127] Each of the hexagonal segments comprises a pair of channels that extend around five edges of the segment and a pair of protrusions that extend around the remaining edge of the segment. With this configuration of the hexagonal segments, each segment of the target assembly, including the center segment, is attached to adjoining segments with tongue-and-groove connections on multiple edges. In the first embodiment, each segment of the target assembly, except the center segment, is attached to adjoining segments with tongue-and-groove connections. Although the alternate embodiment provides a stronger connection (as compared to the first embodiment) between the center segment and surrounding segments via the tongue-and-groove connections of the center segment, the alternate embodiment may require more time and effort for a user to assemble because proper orientation of the protrusions of the hexagonal segments is required for the segments to fit together (i.e., the protrusion and grooves of each hexagonal segment must mate with the grooves and protrusions of all adjoining segments). By contrast, the first embodiment may be quicker and easier for a user to assemble because the hexagonal segments of the original embodiment have no protrusions and, therefore, may be set at any orientation with respect to adjoining segments. The compression straps and optional carrying handle of the alternate embodiment are identical to those described previously in reference to FIGS. **1-13**.

[0128] FIG. **14** is an isometric view of a single hexagonal segment **43** of the alternate embodiment, and FIG. **15** is a transverse cross-section view of the hexagonal segment **43** shown in FIG. **14**. The plane of the front face **44** and the plane of the rear face **45** are perpendicular to the plane of each identical side face **14**. As shown in FIGS. **14** and **15**, each hexagonal segment **43** comprises a pair of identical channels, consisting of a first channel **15** and a second channel **16** positioned around five of the six sides of the perimeter of the segment **43**, and a pair of identical protrusions, consisting of a first protrusion **27** and a second protrusion **28** that are located along the side of the segment that does not contain a channel.

[0129] The sides of the channels **15**, **16** and the protrusions **27**, **28** are parallel to the line formed by the edges of the faces **44**, **45** and the front and rear edges of the sides **14** into which each channel or protrusion is formed. In a preferred embodiment, each hexagonal segment **43** has a length along the long axis (front to rear) of 14 inches and a length of each hexagonal edge of 4⅝ inches. The edge of the first channel **15** nearest the front face **44** is set back one inch from the front face **44**, and the edge of the second channel **16** nearest the rear face **45** is set back one inch from the rear face **45**. The width of the channels **15**, **16** is 2 1/16 inches, and the depth of the channels **15**, **16** is ¼ inch. The channels **15**, **16** form a portion of the tongue-and-groove interlock system between adjoining segments, as is described more fully in reference to FIGS. **17** and **18**.

[0130] As shown in FIG. **14**, the front face **44** of the hexagonal segment **43** comprises six beveled edges **46**. (As used herein, the term "beveled" may also mean "rounded.") Also shown is a high-contrast, painted-on aiming point **47** located in the center of the front face **44**, with the surface area of the aiming point **47** being smaller than the surface area of the front face **44**. The rear face **45** comprises beveled edges **46** and an aiming point **47** (not shown) that are identical to the beveled edges **46** and the aiming point **47** of the front face **44**.

[0131] FIG. **15** shows the continuous shape formed by the first channel **15** around five sides of the perimeter of the segment **43** and the shape of the protrusion **27** on the remaining side of the perimeter. FIG. **16** is an isometric view of a single diamond-shaped segment **48** of the alternate embodiment. As shown, the diamond-shaped segment **48** comprises a front face **49** and a rear face **50**, each of which has four beveled edges **46**. The channels **24**, **25** and protrusions **27**, **28** of the diamond-shaped segment **48** of the alternate embodiment are identical to those described previously in reference to FIGS. **5-8**.

[0132] FIG. **17** is a cut-away from view of the alternate embodiment in standard size **51**. Note that the particular configuration shown in FIG. **17** is one example of an assembly option for this embodiment, but there are other possible assembly options. In FIG. **17**, the first "tongue" or first protrusion **27** of each of the tongue-and-groove connectors is depicted with a hatch pattern. This figure illustrates the multiple tongue-and-groove connections that exist between each of the segments (hexagonal and diamond-shaped) when the standard-size modular target **51** is assembled.

[0133] For ease of reference, the individual hexagonal segments have been separately labeled in FIGS. **17** and **18**. The target assembly **51** comprises a first hexagonal segment **52**, a second hexagonal segment **53**, a third hexagonal segment **54**, a fourth hexagonal segment **55**, a fifth hexagonal segment **56**, a sixth hexagonal segment **57**, a seventh hexagonal, segment **58**, and multiple diamond-shaped segments **48**. Each of the tongue-and groove connections in the assembly is shown. For example, the first hexagonal segment **52** is connected to the second hexagonal segment **53** by a first protrusion **27** in the first hexagonal segment **52** that mates with a first channel **15** in the second hexagonal segment **53**. Two first channels **15** in the first hexagonal segment **52** mate with first protrusions **27** in two adjoining diamond-shaped segments **48**.

[0134] Although each segment in the assembly is connected to at least two adjoining segments with tongue-and-groove connections, not every adjoining pair of surfaces is connected. For example, the first hexagonal segment **52** adjoins the third hexagonal segment **54** as shown, but the adjoining surfaces between these two segments are each comprised of a first channel **15** so that no tongue-and-groove connection exists between these two segments. The fourth hexagonal segment **55**, which is the center segment, is connected on all six sides to adjoining hexagonal segments as shown, with the first protrusion **27** of the fourth hexagonal segment **55** mating with the bottom first channel **15** of the first hexagonal segment **52**, and the five first channels **15** of the fourth hexagonal segment **55** mating with first protrusions **27** of the other surrounding hexagonal segments **53**, **54**, **56**, **57**, and **58**. For ease of illustration, the channels on the outside edges of each outer segment that mate with the compression strap are not shown.

[0135] FIG. **18** is a cut-away front view of the alternate embodiment in compact size **59**. As in the previous figure, the first protrusions **27** of each tongue-and-groove connector are identified with a hatch pattern. The compact size alternate embodiment **59** comprises a first hexagonal segment **52**, a second hexagonal segment **53**, a third hexagonal segment **54**, and three diamond-shaped segments **48**. This figure illustrates the multiple tongue-and-groove connections that exist between each of the segments (hexagonal and diamond-shaped) when the compact-size modular target **59** is assembled.

[0136] For example, one first channel **15** of the first hexagonal segment **52** mates with the first protrusion **27** of the adjoining second hexagonal segment **53**, and the first protrusion **27** of the first hexagonal segment **52** mates with one first channel **15** of the adjoining third hexagonal segment **54**. Two of the first channels **15** of the first hexagonal segment **52** mate with first protrusions **27** of the adjoining diamond-shaped segments **48**. As in FIG. **17**, the channels on the outside edges of each outer segment that mate with the compression strap are not shown.

[0137] FIG. **19** is a front view of the alternate embodiment shown in standard size **51**. This figure illustrates how the raised hexagonal segment faces **44** in combination with the high-contrast aiming points **47** provide a shooter with multiple, clearly defined shooting spots on the face of the standard-size target **51**.

[0138] FIG. **20** is a front view of the alternate embodiment shown in compact size **59**. This figure illustrates how the raised hexagonal segment faces **44** in combination with the high-contrast aiming points **47** provide a shooter with multiple, clearly defined shooting spots on the target surface of the compact-size target **52**.

[0139] Although the preferred embodiments of the present invention have been shown and described, it will be apparent to those skilled in the art that many changes and modifications may be made without departing from the invention in its broader aspects. The appended claims are therefore intended to cover all such changes and modifications as fall within the true spirit and scope of the invention.

We claim:

1. A modular archery target comprising a plurality of hexagonal prismatic foam segments and a plurality of rhomboidal prismatic foam segments configured to form an archery target in the shape of a single hexagonal prism, wherein each of the hexagonal prismatic foam segments and each of the rhomboidal prismatic foam segments is replaceable, interchangeable and reversible, and wherein each of the hexagonal prismatic foam segments is also rotatable.

2. The modular archery target of claim **1**, wherein each of the hexagonal prismatic foam segments and each of the rhomboidal prismatic foam segments is comprised of flexible, self-healing polyurethane foam.

3. The modular archery target of claim **1**, wherein each of the hexagonal prismatic foam segments comprises a first channel and a second channel positioned around a perimeter of the hexagonal prismatic foam segment, wherein the first channel and the second channel are parallel to each other;

wherein each of the rhomboidal prismatic foam segments comprises a first side face, a second side face, a third side face, and a fourth side face;

wherein each of the rhomboidal prismatic foam segments comprises a first channel in the first side face of the rhomboidal prismatic foam segment and a second channel in the second side face of the rhomboidal prismatic foam segment, and wherein the first side face and the second side face are adjacent side faces;

wherein each of the rhomboidal prismatic foam segments further comprises a first protrusion located on the third side face of the rhomboidal prismatic foam segment and a second protrusion located on the fourth side face of the rhomboidal prismatic foam segment, wherein the third side face and the fourth side face are adjacent side faces; and

wherein the protrusions on the rhomboidal prismatic foam segments, together with the channels on the hexagonal prismatic foam segments, form a tongue-and-groove connection between the rhomboidal prismatic foam segments and the hexagonal prismatic foam segments.

4. The modular archery target of claim **3**, further comprising a pair of compression straps, wherein the channels on the hexagonal prismatic foam segments and the channels on the rhomboidal prismatic foam segments form continuous channels that extend around a perimeter of the single hexagonal prism, and wherein the compression straps fit within the continuous channels.

5. The modular archery target of claim **4**, wherein a first portion of a hook-and-loop fastener is attached to a bottom of the first channel on each of the rhomboidal prismatic foam segments and a bottom of the second channel on each of the rhomboidal prismatic foam segments; and

wherein each of the compression straps has an underside, wherein the underside of the compression strap comprises a second portion of a hook-and-loop fastener, and wherein the second portion of the hook-and-loop fastener on the underside of the compression strap adheres to the first portion of the hook-and-loop fastener on the rhomboidal prismatic foam segments.

6. The modular archery target of claim **1**, wherein each of the hexagonal prismatic foam segments and each of the rhomboidal prismatic foam segments comprises a from face having beveled edges and a rear face having beveled edges, wherein the beveled edges on the front face form a raised surface on the front face of each hexagonal prismatic foam segment and each rhomboidal prismatic foam segment, and wherein the beveled edges on the rear face form a raised surface on the rear face of each hexagonal prismatic foam segment and each rhomboidal prismatic foam segment.

7. The modular archery target of claim **1**, wherein each of the hexagonal prismatic foam segments comprises a high-contrast, hexagonal focal point on a front face of the hexagonal prismatic foam segment.

8. The modular archery target of claim **1**, wherein each of the hexagonal prismatic foam segments comprises a high-contrast, hexagonal focal point on a rear face of the hexagonal prismatic foam segment.

9. The modular archery target of claim **1**, wherein each of the hexagonal prismatic foam segments comprises a first side face, a second side face, a third side face, a fourth side face, a fifth side face, and a sixth side face;

wherein each of the hexagonal prismatic foam segments comprises a first channel and a second channel that extend around the first side face, the second side face, the third side face, the fourth side face, and the fifth side face of the hexagonal prismatic foam segment, and wherein the first channel and the second channel are parallel to each other;

wherein each of the hexagonal prismatic foam segments comprises a protrusion located on a sixth side face of the hexagonal prismatic foam segment; and

wherein the protrusions and channels on the hexagonal prismatic foam segments form a tongue-and-groove connection between adjacent hexagonal prismatic foam segments.

* * * * *