(No Model.)

A. B. CURTIS.

BOLT SUPPORT AND GUIDE FOR SAFE DOORS.

No. 456,084. Patented July 14, 1891.

Fig. 1.

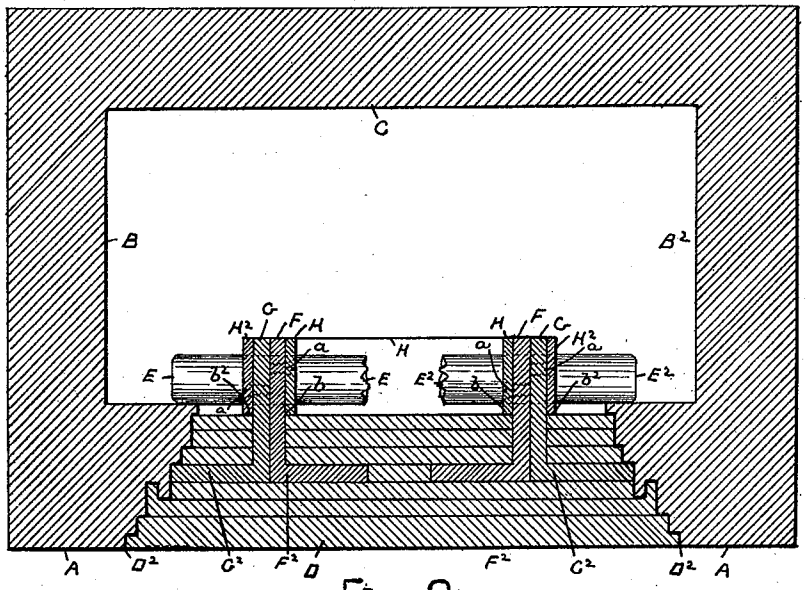

Fig. 2.

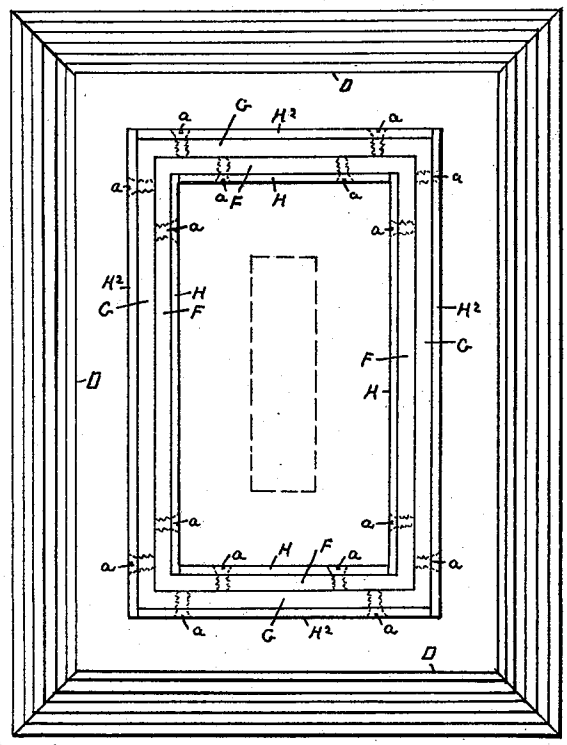

WITNESSES.

Henry F. McKeever.

Adelbert F. Hancock.

INVENTOR.

Arthur B. Curtis

by his Attorneys

Brown Bros.

THE NORRIS PETERS CO., PHOTO-LITHO., WASHINGTON, D. C.

UNITED STATES PATENT OFFICE.

ARTHUR B. CURTIS, OF REVERE, MASSACHUSETTS.

BOLT SUPPORT AND GUIDE FOR SAFE-DOORS.

SPECIFICATION forming part of Letters Patent No. 456,084, dated July 14, 1891.

Application filed October 10, 1890. Serial No. 367,712. (No model.)

To all whom it may concern:

Be it known that I, ARTHUR B. CURTIS, a citizen of the United States of America, and a resident of the town of Revere, in the county of Suffolk and State of Massachusetts, have invented a certain new and Improved Bolt Support and Guide for Safe-Doors, of which the following is a full, clear, and exact description.

This invention relates solely to the supports and guides of safe-doors for the movement of bolts.

The invention in substance consists of a bolt support and guide, which is suitably constructed and situated at the inner portion of the door to receive, support, and guide a bolt or bolts of the door, and has an extension shaped to lead directly into and partially through the thickness of the door and intermediately of the outer and inner sides thereof, shaped to project laterally and to lie in and between two layers or plates of metal of the plates making up the door.

Preferably a bolt support or guide for safe-doors above described, and of this invention, is in the form of a frame entirely surrounding in all its portions the safe-door, and also in two parts having their portions projecting from inner side of and extending into the door lying against each other, and these portions lying in and between two layers of the series of metal layers making up the door projected in directions opposite to each other, all features of this invention.

In the drawings forming part of this specification, the invention is illustrated in what is now believed to be its best and most practical form, and Figure 1 is a horizontal section of a safe-door and of its joint and the walls otherwise of the safe, which walls, however, are only shown in blank, the door itself being shown in its separate metal layers. Fig. 2 is an elevation of the inner face of the door detached from the safe.

In the drawings, A is the front, B B^2 the opposite side, and C the rear walls, of a safe severally constructed in any of the well-known or other suitable ways to attain the security desired.

D is the door, and D^2 is the door-jamb, of the front wall A of the safe. The door D is constructed of separate layers or plates of metal of any of the well-known or other suitable characters, and in any of the well-known or other suitable ways to attain the security desired, and as neither the construction of the door nor of the walls nor of the edge of the door and its jamb of the safe form of themselves, separately or together, any part of this invention it is not deemed necessary to herein more particularly describe them.

E E^2 represent two bolts of the safe-door, and each is supported and guided in accordance with this invention.

The support and guide for the bolts, as particularly shown, is a frame in two parts F F^2 and G G^2, respectively, each preferably shouldered, as will hereinafter appear. The frame preferably corresponds in outline with that of and entirely surrounds but it is of smaller dimensions than those of the door. Each part of the frame is right-angular in cross-section, and one and the same portions F G, respectively, of each lies against each other and the other and the same portions F^2 G^2 of each project at right angles from their respective portions F G, but in opposite directions, and the frame in this position of its parts and attached to the door has the portions F^2 G^2 of each lying and held between two of the plates of metal in part making up the door and intermediate of inner and outer sides thereof, and the portions F G of each extend through the thickness to and are projected beyond the inner side of the door, whereat they are bored or otherwise suitably adapted and as well known and as shown by dotted lines, to serve as guides and supports to bolts E E^2, as also, if so desired, to one or more bolts (not shown) in addition to said bolts E E^2.

The bolt supporting and guiding frame F F^2 and G G^2 above described at its projection inward from the inner side of the door and on its inner and outer faces is shown as re-enforced by metal plates or layers H H^2, respectively, and each layer is secured by screws *a* or rivets or other suitable fastening device to its respective parts of the frame, and also makes a shoulder *b* b^2, both of which shoulders lie against the inner side of the door at and around the frame both on its inner and outer sides.

The advantages of the support and guide for bolts of safe-doors, all substantially as de-

scribed, as regards safety against attacks of burglars under any and all the well-known methods employed by them, are so obvious as to need no particular mention herein, while the invention has been shown and described in what is believed to be its most approved form. It is plain that it may be varied in many respects without departure from the spirit of this invention—as, for instance, the frame in lieu of being continuous may be in separate pieces each located at a proper position to receive a bolt or bolts. Again, the frame, either in the continuous form particularly shown or in separate pieces, may consist of only one and either of the parts F F^2 or G G^2. Again, the re-enforcing strips H H^2 and shoulders b b^2, either one or both, may be dispensed with.

Having thus described my invention, what I claim, and desire to secure by Letters Patent, is—

1. The combination, with a safe-door, of a bolt support and guide constructed of metal and shaped to project from the inner side and to enter into and partially through the thickness of and within the door to extend laterally and lie between separate layers thereof, substantially as described, for the purposes specified.

2. The combination, with a safe-door, of a bolt support and guide constructed of metal and shaped to continuously surround but of smaller dimensions than the door, and also to project from the inner side to enter into and partially through the thickness of and within the door to extend laterally and lie between separate layers thereof, substantially as described, for the purposes specified.

3. The combination, with a safe-door, of a bolt and guide constructed of metal in two parts F F^2 G G^2, in one portion F G of each shaped to lie against each other and together to project from the inner side of the door and in the other portion F^2 G^2 of each shaped to project laterally in opposite directions and lie between separate layers of the door, substantially as described, for the purposes specified.

4. The combination, with a safe-door and a bolt support and guide constructed of metal and shaped to continuously surround but of smaller dimensions than the door, and also to project from the inner side to enter into and partially through the thickness of and within the door to extend laterally and lie between separate layers thereof, of a strip or strips H H^2, attached to the inward projection of said bolt support and guide and having a rest against the inner side of the door, substantially as described, for the purposes specified.

In testimony whereof I have hereunto set my hand in the presence of two subscribing witnesses.

ARTHUR B. CURTIS.

Witnesses:
ALBERT W. BROWN,
ADELBERT F. HANCOCK.