April 20, 1965 C. H. BRACKEN 3,179,396

TIME-DELAY ACTUATOR FOR TOGGLE SWITCHES

Filed Sept. 4, 1962

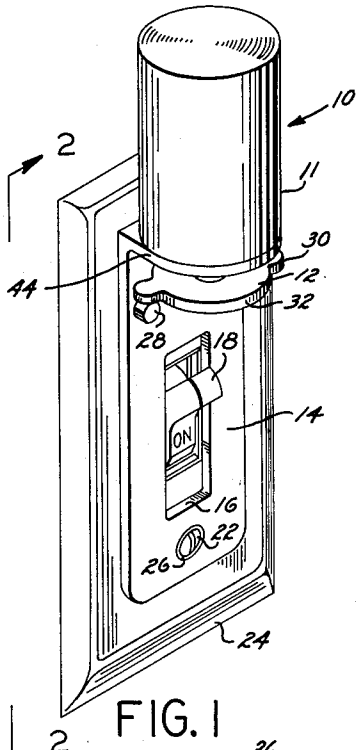

FIG. 1

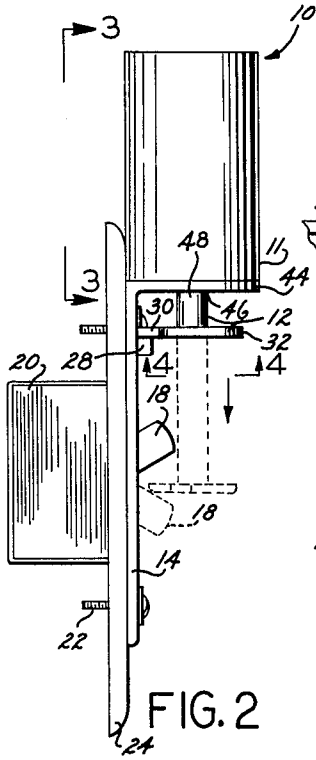

FIG. 2

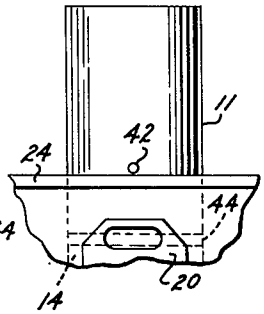

FIG. 3

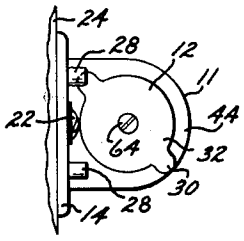

FIG. 4

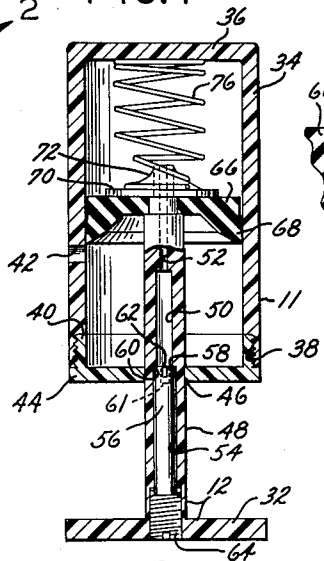

FIG. 5

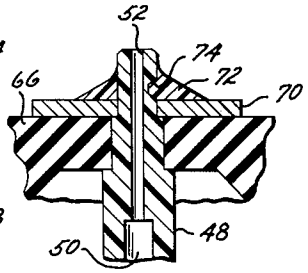

FIG. 6

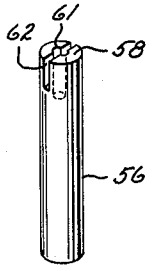

FIG. 8

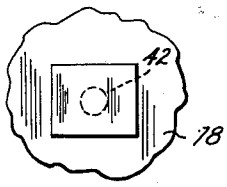

FIG. 7

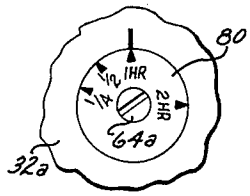

FIG. 9

INVENTOR.
CLEMENT H. BRACKEN

BY R. E. Beaupre

ATTORNEY

United States Patent Office 3,179,396
Patented Apr. 20, 1965

3,179,396
TIME-DELAY ACTUATOR FOR TOGGLE SWITCHES

Clement H. Bracken, 13576 Daventry St., Pacoima, Calif.
Filed Sept. 4, 1962, Ser. No. 221,264
4 Claims. (Cl. 267—1)

This invention relates to time-delay actuators for toggle switches and more particularly to a modification of a time-delay actuator of the type disclosed in Patent No. 2,637,788.

It is often desirable to operate wall-mounted electrical switches without the physical presence of the user. For example, a light in a garage may be switched on at night for the purpose of lighting the surrounding area for the benefit of a person removing his automobile from the garage. It is then necessary to leave the vehicle and return to the garage to switch the light off.

The time-delay actuator described in Patent No. 2,637,788 comprises a cylinder adapted to contain a viscous liquid in which a piston is slidably mounted. The piston is urged in one direction by a spring and is provided with a restricted port to slow the movement of the piston through the viscous liquid. A shaft is slidably mounted within the piston and includes means at one end adapted to engage the projecting handle of a wall switch. In operation, the piston travels slowly downwardly in the liquid due to the force exerted by the spring. During a first increment of travel, the piston slides freely upon the shaft and during a second increment of travel the piston is connected to the shaft so that it will move the shaft with it to trip the switch.

While generally satisfactory, this time-delay actuator does have certain drawbacks. The necessity of employing a viscous fluid, such as oil, adds to the first cost of the device, creates maintenance problems and necessitates mounting the device in an upright position below the switch.

Other prior art devices are available for automatically switching lights on and off; however, in some cases it is necessary to replace the conventional wall switch with a switch incorporating a time-delay mechanism therein. In other instances, though the mechanisms are attachable to conventional wall switches, they do not have means permitting a user to present the time interval during which the switch is to remain unaffected by the time-delay device.

In view of the foregoing factors and conditions characteristic of time-delay actuators which automatically switch electric lights on and off at predetermined times, it is a primary object of the present invention to provide a new and useful time-delay actuator for wall switches which has a pneumatic cylinder and spring biased piston connected to a switch-contacting plunger including means for controlling movement of the piston within the cylinder and which is especially designed for automatically activating or de-activating electrical wall switches efficiently, safely and expeditiously.

Another object of the invention is to provide a time-delay actuator which may be readily attached to conventional wall switches without modifying their construction.

Yet another object of the invention is to provide a time-delay actuator of a pneumatic type which is simple and economical in construction and which includes means for presetting the time interval during which throwing of a wall switch is to be delayed.

Still another object of the invention is to provide a pneumatic time-delay actuator of the type described which will not interfere with normal operation of a wall switch and which includes means to lock the actuator in an inoperative position.

A further object of the invention is to provide a pnumatic time-delay actuator wherein the pressure of a spring acting on a piston to move the piston in a switch tripping direction is opposed by atmospheric pressure in a manner which may be controlled to delay or retard movement of the piston ot impart a predetermined time delay to the tripping of the switch.

Another object of the invention is to provide a time-delay wall switch actuator having (1) a pneumatic cylinder, (2) a bracket adapted for ready attachment to conventional wall-mounted electrical switches, (3) a piston slidably mounted in the cylinder which is urged in one direction by a spring interposed between the piston and one end of the cylinder and (4) a plunger connected to the piston which includes a restricted port which slowly bleeds air into the cylinder above the piston to aid the spring in overcoming atmospheric pressure acting below the piston.

These and other more specific objects will appear upon reading the following specification and claims and upon considering in connection therewith the attached drawings to which they relate.

Referring now to the drawings in which a presently preferred embodiment of the invention is illustrated:

FIGURE 1 is a perspective view of time-delay actuator of the invention attached to a conventional wall-mounted electrical toggle switch;

FIGURE 2 is a side elevational view taken in the direction of arrows 2—2 of FIGURE 1;

FIGURE 3 is a partial elevational view of the time-delay actuator taken in the direction of arrows 3—3 of FIGURE 2;

FIGURE 4 is a plan view of the time-delay actuator taken in the direction of arrows 4—4 of FIGURE 2;

FIGURE 5 is a cross-sectional view, on an enlarged scale, of the time-delay actuator of the invention;

FIGURE 6 is a partial, cross-sectional view, on an enlarged scale, showing a detail of construction of the piston and plunger of the time-delay actuator;

FIGURE 7 is an enlarged detail of construction showing somewhat schematically a modification of the device shown in FIGURE 3 wherein the air-release port shown in the cylinder of FIGURE 3 is sealed;

FIGURE 8 is a perspective view of means employed in the time-delay actuator to control the operation thereof; and

FIGURE 9 is a partial plan view of a detail of construction of a modified form of a portion of the time-delay actuator.

Referring again to the drawings, the time-delay actuator constituting the present invention, generally designated 10, includes a pneumatic cylinder 11 and a plunger assembly 12 which are connected to a wall-mounting bracket 14.

The bracket 14 has a central opening 16 adapted to encompass the toggle 18 of a conventional wall-mounted electrical switch 20 without interfering with the operation thereof. The time-delay actuator is mounted by removing the screws 22 which hold the conventional cover plate 24 in position on the switch 20, aligning the screw receiving apertures 26 in the bracket with similar apertures in the cover plate 24 and reinstalling the screws 22. The bracket 14 includes a plurality of protuberances 28 which may be engaged by an ear 30 on a disc 32 forming part of the plunger 12 to maintain the plunger 12 in an elevated position above the toggle 18. The switch 20 is turned off by rotating the disc 32 sufficiently to bring it out of engagement with a protuberance 28 whereupon the plunger 12 will descend very slowly and contact the toggle 18 to throw it to its "off" position, as shown in broken lines in FIGURE 2.

The cylinder 11 includes an encompassing sidewall 34,

a closed bottom wall 36 and an internally threaded, open top 38 which is adapted to threadedly engage an externally threaded, annular shoulder 40 on the bracket 14 (FIG. 5). An air release port 42 is mounted in the sidewall 34 for a purpose to be hereinafter explained. The externally threaded shoulder 40 is mounted on a horizontal leg 44 forming an integral part of the bracket 14. An aperture 46 is mounted in the leg 44 to slidably receive a shaft 48 forming part of the plunger 12.

The shaft 48 includes a through-going bore 50 which is restricted at one end to form a reduced flow passage 52 and which is enlarged at the other end to form a chamber 54 for a slotted, resilient, flow regulator 56. A slotted end 58 of the regulator 56 engages a shoulder 60 formed by the juncture of chamber 54 with the reduced diameter of the bore 50. The end 58 is first drilled to form a cylindrical recess 61 and is then provided with a slot 62 which assures that air will flow from chamber 54 to flow passage 52 even though the slotted end 58 is pressed into firm engagement with the shoulder 60. There is sufficient clearance between the regulator 56 and the inner wall of the chamber 54 to permit uniform flow of air therethrough; however, a screw 64 may be progressively tightened to compress the regulator 56 and press it into engagement with the inner wall of chamber 54 to progressively restrict the flow of air therethrough until it is completely stopped. Thus, flow of air through the flow passage 52 may be regulated from a maximum flow to a complete stoppage of flow.

A cup-shaped, flexible piston 66 is slidably mounted in the cylinder 11 and has an outwardly flaring, encompassing sidewall 68 adapted to engage the inner wall of the cylinder 11. The piston 66 is connected to the shaft 48 by means of a washer 70 and a thermosetting plastic member 72 which may be applied to the tip of the shaft 48 above the washer 70 in a molten state and permitted to set. It is to be noted that a notch 74 (FIG. 6) is included at the end of the shaft 48 into which the plastic flows to form a firm bond.

The piston 66 is biased away from the closed bottom wall 36 by means of a compression spring 76 which has one end bearing against the bottom wall and another end encompassing the plastic member 72. Assuming that screw 64 is tightened enough to prevent flow of air through passage 52, then the force of the spring 76 acting on the top of the piston 66 to drive it downwardly away from the bottom wall 36 is offset by the forces exerted on the bottom of the piston by atmospheric pressure entering between the shaft 48 and the aperture 46. When the piston is moved upwardly within the cylinder 11 toward the bottom wall 36 air is exhausted from the cylinder by flowing downwardly between the flared wall 68 of the piston and the inner wall of the cylinder so that, theoretically, the atmospheric pressure acting on the bottom of the piston 66 will equalize the force exerted by the spring 76 on top of the piston so that it will remain static in its upper position. However, there is some seepage of air past the piston so that the spring slowly overcomes the atmospheric pressure working on the bottom of the piston to drive the piston downwardly. As soon as the piston passes the port 42 in the cylinder 11, the negative pressure above the piston is overcome by atmospheric pressure which is then equalized on both sides of the piston thereby permitting the full force of the spring 76 to operate without opposition to snap the plunger 12 to the end of its stroke striking the toggle 18 to throw it to its "off" position. If it is desired to further delay the downward stroke of the piston 66, the port 42 may be sealed with a suitable seal 78, as shown in FIGURE 7, so that the piston will proceed slowly to the end of its stroke. Under these conditions, the natural downward stroke of the piston takes approximately three hours. When, on the other hand, the port 42 is open and the screw 64 is loosened sufficiently to leave a maximum of clearance between the regulator 56 and the inner wall of chamber 54 so that full flow through passage 52 is permitted, the piston 66 will travel a full stroke in a few seconds. Of course it is apparent that as the passage between the inner wall of chamber 54 and the regulator 56 is diminished in size by tightening the screw 64, there is a corresponding increase in the length of time it takes the piston to make a full downward stroke. It is also apparent that the time-delay period can be further regulated by only partially depressing plunger 12 so that the piston 66 is not required to travel the full length of cylinder 11 in making its downward stroke.

Referring now to FIGURE 9, a modified disc 32*a* and screw 64*a* is employed wherein the screw 64*a* includes an enlarged head portion 80 which is marked off in increments of an hour so that the user of the device may set the screw 64*a* to a desired time delay interval.

Operation of the device will be readily understood. The plunger 12 may be only partially depressed, as described above, or it may be completely depressed driving the piston 66 to its uppermost position where it is adjacent the bottom wall 36 in which case the disc 32 may be rotated to bring an ear 30 into engagement with a protuberance 28 to maintain the time-delay actuator 10 in an inoperable condition until it is desired to use it. Assuming that the screw 64 has been adjusted to compress regulator 56 to a desired degree so that a predetermined time delay will be effected, that port 42 is open and that plunger 12 is completely depressed with the disc 32 engaging protuberance 28, then when it is desired to have the light switch 20 extinguish a light a predetermined period of time after a person has left a lighted area, the disc 32 is rotated to release the ear 30 and the plunger 12 slowly descends by virtue of seepage of air past the piston 66 and air flowing through the chamber 54, slot 62 and the passage 52 into the area above the piston thereby implementing the force exerted by the spring at a slow, uniform rate. The plunger 12 will slowly descend until the piston 66 passes the air inlet port 42 at which time air will be admitted above the piston thereby equalizing the pressure on both sides of the piston so that the force of the spring 76 will act uninhibited to snap the plunger against the toggle 18.

While the particular time-delay actuator herein shown and described in detail is fully capable of attaining the objects and providing the advantages herein before stated, it is to be understood that it is merely illustrative of the presently preferred embodiment of the invention and that no limitations are intended to the details of construction or design herein shown other than as defined in the appended claims.

I claim:

1. A time-delay actuator for a control element comprising:

a pneumatic cylinder having one closed end;

a piston slidably mounted in said cylinder in substantially air tight relationship with the wall of said cylinder;

a shaft having one end connected with said piston and extending through an opening in the other end of said cylinder opposite said closed end and nearest said control element;

a fluid passage through said shaft for connecting the space between said piston and said closed end with atmosphere;

spring means located between said closed end and said piston for forcing said piston toward said other end and toward said control element;

metering means located in said passage for regulating the flow of air into said space to regulate the speed at which said piston is moved by said spring after said spring is compressed by movement of said shaft into said cylinder;

said metering means comprising a resilient member located entirely within said passage; and

adjustable regulating means located within said shaft

accessible from the exterior for compressing said resilient member to control the rate of flow through said passage.

2. A time-delay actuator for a control element comprising:

a pneumatic cylinder having one closed end;

a piston slidably mounted in said cylinder in substantially air tight relationship with the wall of said cylinder;

a shaft having one end connected with said piston and extending through an opening in the other end of said cylinder opposite said closed end and nearest said control element;

a fluid passage through said shaft for connecting the space between said piston and said closed end with atmosphere;

spring means located between said closed end and said piston for forcing said piston toward said other end and toward said control element;

metering means located in said passage for regulating the flow of air into said space to regulate the speed at which said piston is moved by said spring after said spring is compressed by movement of said shaft into said cylinder;

said passage including a stepped portion formed by a shoulder between larger and smaller portions of said passage;

said metering means comprising a resilient member extending along said larger portion into end abutment with said shoulder; and

adjustable means accessible from the exterior for compressing said resilient member to expand said member within said larger portion to regulate the flow of air around said member into said space.

3. A time-delay actuator as defined in claim 2 having slot means located adjacent the end of said member to connect the space around said member with said smaller passage portion while the end of said member is compressed against said shoulder.

4. A time-delay actuator for a control element comprising:

a pneumatic cylinder having one closed end;

a piston slidably mounted in said cylinder in substantially air tight relationship with the wall of said cylinder;

a shaft having one end connected with said piston and

extending through an opening in the other end of said cylinder opposite said closed end and nearest said control element;

a fluid passage through said shaft for connecting the space between said piston and said closed end with atmosphere;

spring means located between said closed end and said piston for forcing said piston toward said other end and toward said control element;

metering means located in said passage for regulating the flow of air into said space to regulate the speed at which said piston is moved by said spring after said spring is compressed by movement of said shaft into said cylinder;

an actuator member on the other end of said shaft for engaging and moving said control element as said shaft moves out of said cylinder;

said cylinder being supported by a bracket extending from said other end of said cylinder;

a protuberance on said bracket; and

a projection on said actuator member;

said projection being rotatable into engagement with said protuberance after said piston is moved into said cylinder a predetermined distance and being normally held in such engagement by said spring means; said piston being released by rotation of said projection away from said protuberance.

References Cited by the Examiner

UNITED STATES PATENTS

1,323,230	11/19	Dotson	188—96
1,610,889	12/26	Schmidt	138—45 X
1,992,555	2/35	Templin.	
2,035,648	3/36	Frank	200—34
2,363,754	11/44	Smith et al.	138—46
2,776,525	1/57	Ford	267—1 X
3,055,397	9/62	Vrshek	138—46

FOREIGN PATENTS

577,139	5/24	France.
1,072,006	3/54	France.

ARTHUR L. LA POINT, *Primary Examiner.*

ROBERT K. SCHAEFER, *Examiner.*