June 23, 1931. W. W. S. CARPENTER 1,811,612

MUCILAGE SPREADER

Filed June 21, 1930

Fig. 1

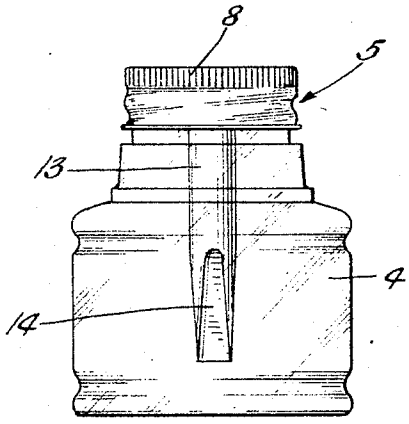

Fig. 3

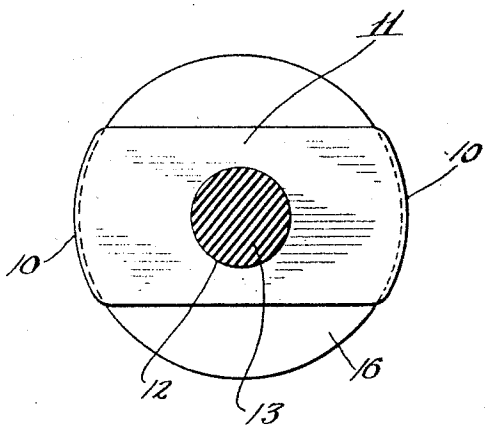

Fig. 2

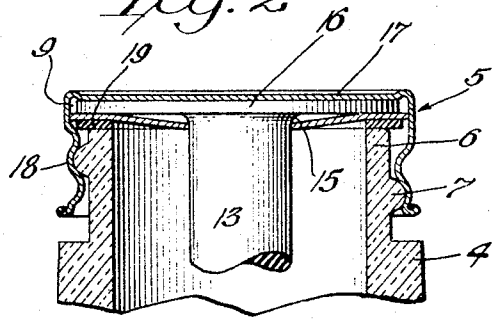

Inventor:
William W. S. Carpenter,
By Chas. M. Nissen,
Atty.

Patented June 23, 1931 1,811,612

UNITED STATES PATENT OFFICE

WILLIAM W. S. CARPENTER, OF CHICAGO, ILLINOIS

MUCILAGE SPREADER

Application filed June 21, 1930. Serial No. 462,774.

My invention relates to mucilage spreaders and one of its objects is the provision of an improved and efficient applicator.

A further object of the invention is the provision of improved and efficient means for securing an applicator to a cap or cover adapted to serve as a closure for a container of a liquid such as mucilage.

Another object of the invention is the provision of a spring metal retainer for holding within a screw-threaded cap of a container by pressing against the inner bottom of said container, a disc of soft rubber integral with a soft rubber applicator which is adapted to be suspended in the liquid in the bottle when the cap is secured in place to act as a closure.

Other objects of the invention will appear hereinafter, the novel features and combinations being set forth in the appended claims.

In the accompanying drawings—

Fig. 1 is an elevation of a mucilage bottle closed with a screw-threaded cap with an applicator suspended in the bottle from the cap;

Fig. 2 is an enlarged sectional elevation illustrating the details of my improvements; and

Fig. 3 is a sectional view looking upwardly to illustrate the contour of the spring metal retainer associated with the disc and shank of the applicator.

In Fig. 1, the mucilage bottle 4 is shown provided with a screw-threaded cap 5. Fig. 2 shows that the mouth 6 of the bottle 4 is provided with screw threads 7 so that the cap may be clamped over the mouth of the bottle.

The upper portion of the cap 5 is knurled at 8 to facilitate manual screwing of the cap into closed position or the release thereof from the bottle.

The inner cylindrical wall of the upper portion of the cap 5 affords an annular recess or chamber 9 for receiving the outer arcuate ends 10, 10 of the retainer 11 which is preferably composed of spring metal such as steel or brass.

It should be understood that the retainer 11 is a flat plate with a hole 12 intermediate its ends for receiving the cylindrical shank 13 of the applicator which is preferably composed of soft flexible material such as soft rubber.

To the lower end of the shank 13 is connected the wiper 14 which is preferably integral with the shank 13 and of the same material.

The upper end of the shank 13 is provided with a circular shoulder 15 as shown in Fig. 2. This shoulder 15 flares outwardly from the cylindrical portion of the shank 13 to the flat disc 16. The disc 16 is permanently secured to the upper end of the shank 13 and is preferably integral therewith. It will thus be seen that the disc 16, the shank 13 and the wiper 14 are preferably integral with each other throughout and composed of the same material such as soft rubber.

The upper side of the disc is flat and adapted to engage the lower flat circular surface of the disc-shaped top 17 of the cap 5.

When the parts are assembled the shank 13 is inserted through the opening 12 in the spring metal plate 11 until the circular shoulder 15 engages the edges of the metal at the opening 12. The disc 16 together with the plate 11 are then inserted into the cap 5 by pressing the metal plate 11 on both sides of the shank 13 so that the arcuate ends 10 will slip past the inner surfaces of the screw threads 18 of the cap 5. The length of the retaining plate 11 is slightly greater than the inner diameter of the cap at the screw threads so that bending of the middle portion of the spring metal plate will be necessary to force the latter into the annular recess 9. Since the retaining plate 11 is preferably of spring metal it will tend to automatically straighten itself out when released and therefore when the annular recess 9 is reached the arcuate ends can snap into the same and hold the upper flat surface of the disc 16 against the lower flat surface of the top 17 of the cap 5. It should be particularly noted that the resiliency of the spring metal plate acts against the arcuate circular shoulder 15 to press the disc 16 firmly into direct engagement with the under surface of the top 17.

Although the applicator by means of the shoulder 15 and the disc 16 is detachably secured to the cap 5 to facilitate renewal when desired, the applicator during use always remains connected to the cap 5 to move bodily therewith. It will thus be seen that the cap 5 serves as a handle for the wiper 14.

A washer 19 of soft rubber or other flexible material may be inserted into the cap 5 after the applicator has been connected thereto by means of the spring metal plate retainer 11, such washer being held in place by frictional connection with the inner walls of the cap adjacent the cylindrical wall forming the annular recess 9. Therefore whenever the cap 5 is removed from the bottle 4 for use of the applicator, the washer 19 will remain connected to the inner walls of the cap. Such washer therefore serves as a hermetical seal during transportation as well as during those periods of time when the applicator is not in use but is suspended in the bottle as illustrated in Fig. 1. The metal plate 11 is relatively thin and the disc 16 as well as the washer 19 are of soft flexible material such as soft rubber and therefore when the cap is tightened over the mouth of the bottle such hermetical seal may be readily obtained.

Obviously those skilled in the art may make various changes in the details and arrangement of parts without departing from the spirit and scope of the invention as defined by the claims hereto appended and I wish therefore not to be restricted to the precise construction herein disclosed.

Having thus fully disclosed an embodiment of my invention, what I desire to secure by Letters Patent of the United States is:

1. The combination with a bottle, of a liquid applicator integrally made of soft, flexible material adapted to extend down inside of the bottle and comprising a shank, a spreader at the lower end of the said shank, and a disk at the upper end of said shank and integral therewith and providing a closure for said bottle.

2. The combination with a bottle, of a liquid applicator integrally made of soft rubber adapted to extend down inside of the bottle and comprising a rubber shank, a beveled rubber wiper at the lower end of the said shank, a rubber disk at the upper end of the said shank and integral therewith and providing a closure for said bottle, and a screw-threaded cap cooperating with said bottole and impinging the disk between the cap and the top of the bottle.

3. The combination with a bottle, of a liquid applicator integrally made of soft rubber adapted to extend down inside of the bottle and comprising a rubber shank, a beveled rubber wiper at the lower end of the said shank, a rubber disk at the upper end of the said shank and integral therewith and providing a closure for said bottle, a screw-threaded cap cooperating with said bottle and impinging the disk between the cap and the top of the bottle, and a spring member arranged below said disk for holding the disk against the top of the cap, there being an opening in said spring member for receiving said shank.

In testimony whereof I have signed my name to this specification on this 19th day of June, A. D. 1930.

WILLIAM W. S. CARPENTER.