B. J. GOODSELL.

Chimney Cowl.

No. 70,993. Patented Nov. 19, 1867.

Fig 1.

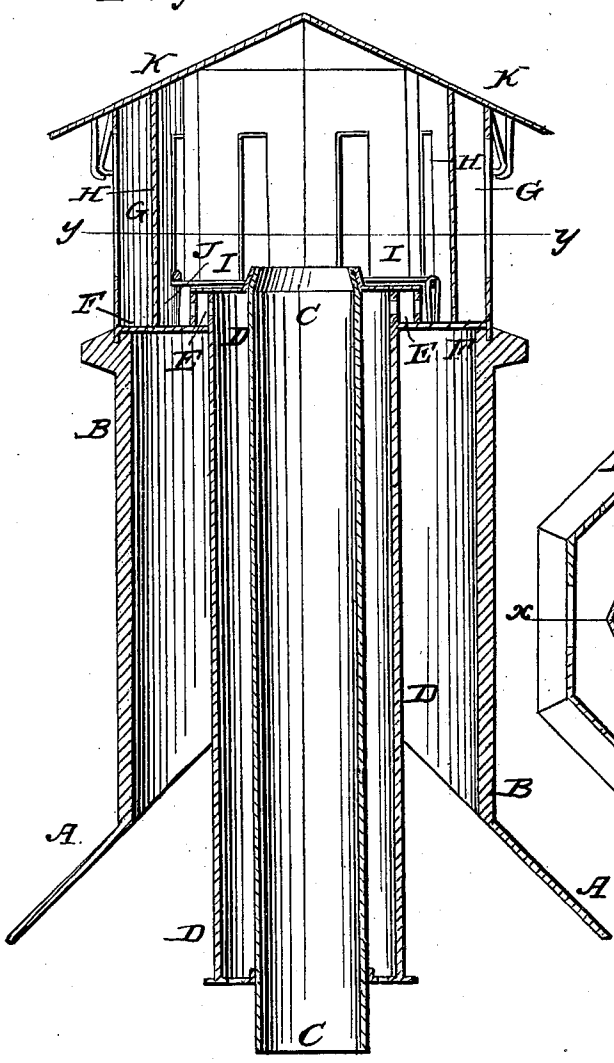

Fig. 2.

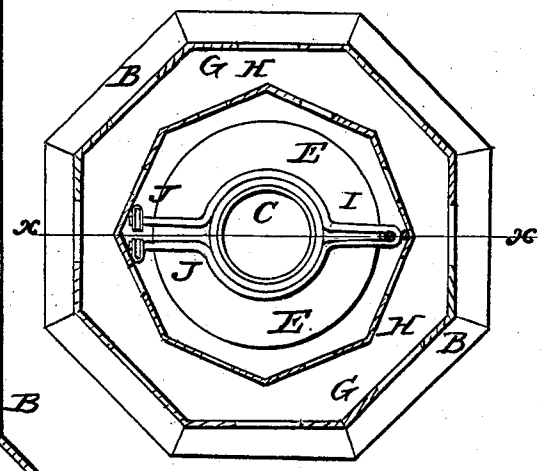

Witnesses

Theo Frisch

J Alvin Fraser

Inventor

B. J. Goodsell

Per Munn & Co

Attorneys.

N. PETERS, Photo-Lithographer, Washington, D. C.

United States Patent Office.

BENNETT J. GOODSELL, OF PENT WATER, MICHIGAN.

Letters Patent No. 70,993, *dated November* 19, 1867.

CHIMNEY-COWL.

The Schedule referred to in these Letters Patent and making part of the same.

TO ALL WHOM IT MAY CONCERN:

Be it known that I, BENNETT J. GOODSELL, of Pent Water, in the county of Oceana, and State of Michigan, have invented a new and useful Improvement in Chimneys; and I do hereby declare that the following is a full, clear, and exact description thereof, which will enable others skilled in the art to make and use the same, reference being had to the accompanying drawings, forming part of this specification, in which—

Figure 1 is a vertical longitudinal section of my improved chimney, taken through the line *x x*, fig. 2.

Figure 2 is a horizontal section of the same, taken through the line *y y*, fig. 1.

Similar letters of reference indicate corresponding parts.

My invention has for its object to furnish an improved chimney so constructed and arranged as to ventilate the room or rooms of the house, act as spark-arrester, and at the same time prevent the wind from blowing or driving the smoke down the chimney; and it consists in the combination of two or more polygonal slotted caps, or a single cap having double side walls, with the top of the chimney, and in the combination of the interior pipe and exterior ventilating pipe with each other, with the chimney, and with the polygonal slotted caps, the whole being constructed and arranged as hereinafter more fully described.

A represents the roof of the house, and B represents an ordinary chimney, which I prefer to make polygonal, but its form is immaterial. C is the smoke flue or pipe, into which flues from the different fireplaces may lead in the ordinary manner. The upper end of the pipe or flue C extends up to or a little above the top of the chimney B, as shown in fig. 1. D is the ventilating pipe which surrounds the smoke pipe or flue C, and has openings in its lower end, which should terminate at the ceiling of the room into which it leads, through which the impure air from the room may pass into said pipe. The upper end of the pipe D has holes or openings in its sides, through which the impure air may escape. E is a small cap, having a hole in its centre, fitting upon the upper end of the pipe or flue C, so as to support the upper end of the said pipe. The cap E has holes in its sides, through which the impure air from the pipe C may escape. The lower edge of the cap E rests upon the plate F, which forms the top of the chimney B and the bottom of the slotted caps G and H, where it is secured in place by the yoke I, one end of which is pivoted to the plate F upon one side of the cap E, and the other end of which is sprung into the catch J, attached to the plate F upon the other side of the said cap E, as shown in figs. 1 and 2. G and H are two caps securely attached to the top of the chimney B, and which are made polygonal in form, as shown in fig. 2. The caps G and H are made with the same number of sides or faces, and are so arranged that the angles of the one cap may be opposite the faces of the other, as shown in fig. 2. The faces or sides of each of the caps are slotted, so that each slot in the one cap may be opposite a close, angular space in the other cap, as shown in fig. 2.

With this construction and arrangement it will be impossible for the wind to blow the smoke down the chimney, and smoky chimneys from this cause will be effectually guarded against.

K is the top or cover of the cap or caps, which is made pyramidal or conical in form, and which is securely attached to the upper edges of the sides or walls G and H of the cap or caps. By this construction the said cover K acts as a spark-arrester, causing the sparks to drop back upon the bottom or plate F, thus effectually guarding against any danger of fire from the sparks escaping from the chimney.

I claim as new, and desire to secure by Letters Patent—

1. The combination of two polygonal slotted caps G and H, or of a single cap having double side walls, with the top of the chimney, said cap or caps being constructed and arranged substantially as herein shown and described and for the purpose set forth.

2. The combination of the interior pipe or flue C and exterior ventilating pipe D with each other, with the chimney B, and with the polygonal slotted cap or caps G H, substantially as herein shown and described and for the purpose set forth.

The above specification of my invention signed by me this 3d day of September, 1867.

BENNETT J. GOODSELL.

Witnesses:

L. D. GROVE,

HENRY DOVILLE.