Dec. 27, 1938. A. S. ETHRIDGE 2,141,743

DISPLAY CONTAINER

Filed June 4, 1936 2 Sheets-Sheet 1

Fig. 1.

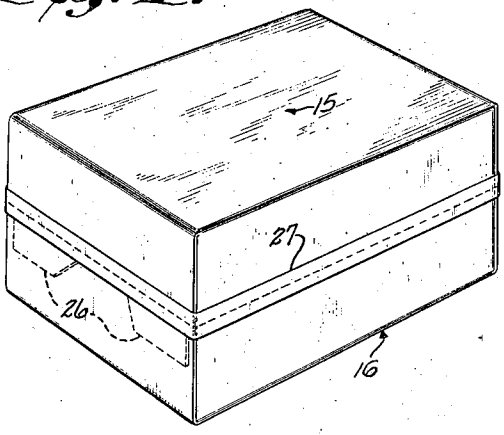

Fig. 4.

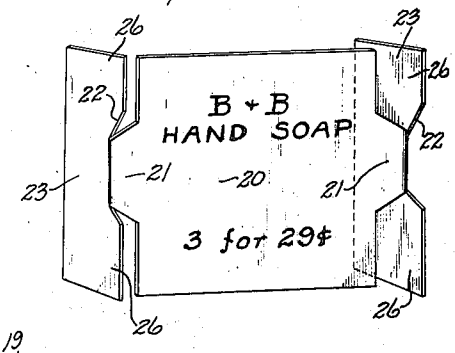

Fig. 2.

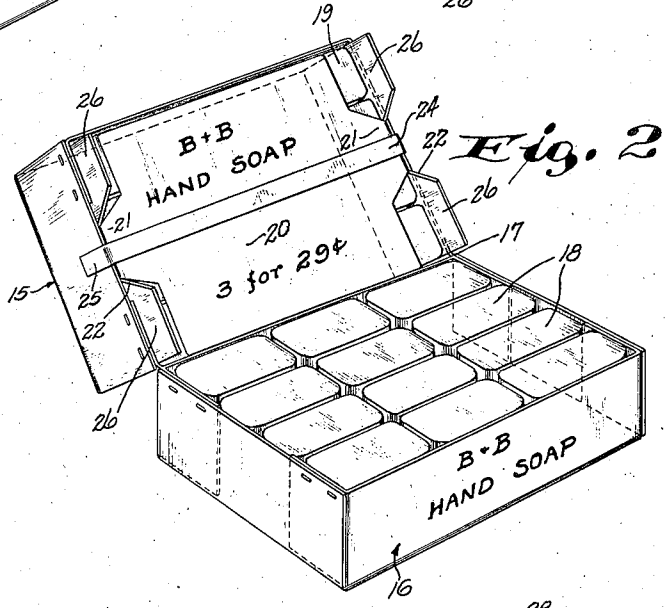

Fig. 3.

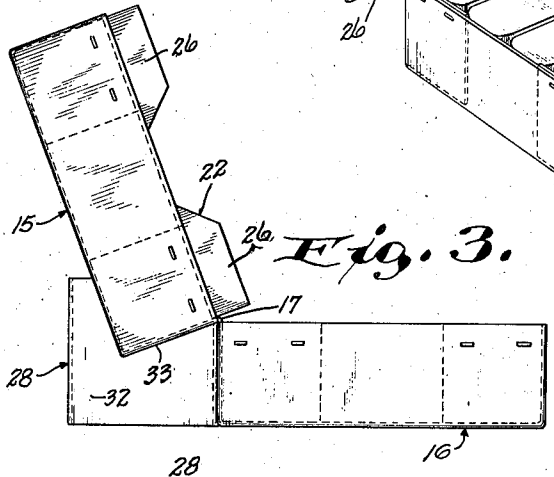

Fig. 6.

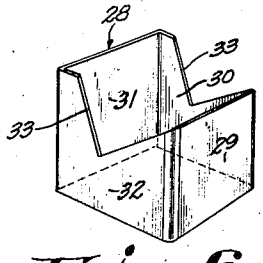

Fig. 5.

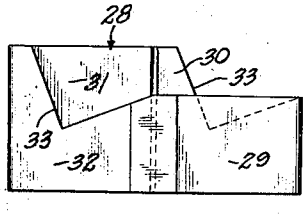

INVENTOR.
Albert S. Ethridge
BY Morsell Luber & Morsell
ATTORNEYS.

Dec. 27, 1938. A. S. ETHRIDGE 2,141,743

DISPLAY CONTAINER

Filed June 4, 1936 2 Sheets-Sheet 2

Fig. 7.

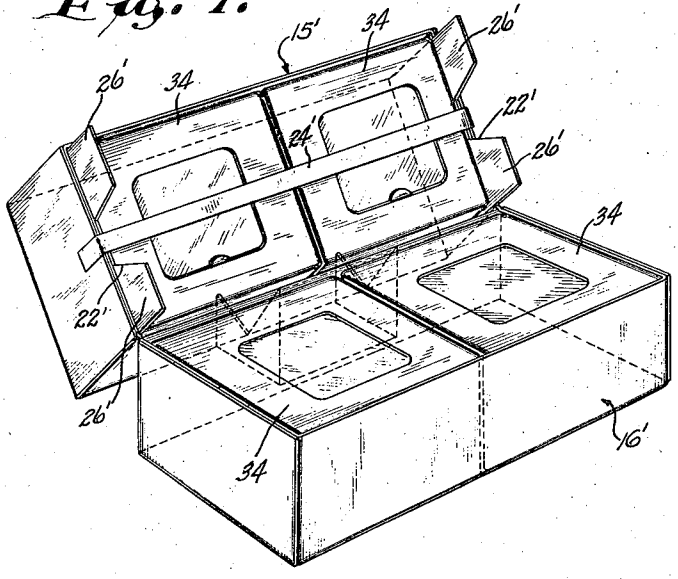

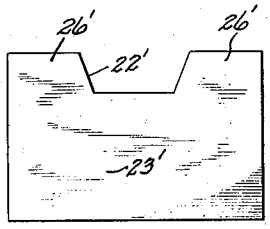

Fig. 8.

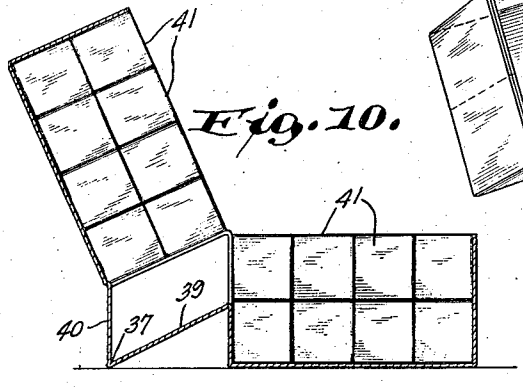

Fig. 10.

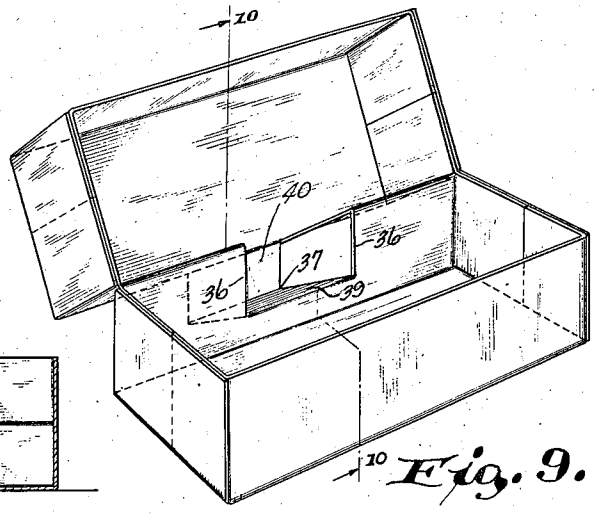

Fig. 9.

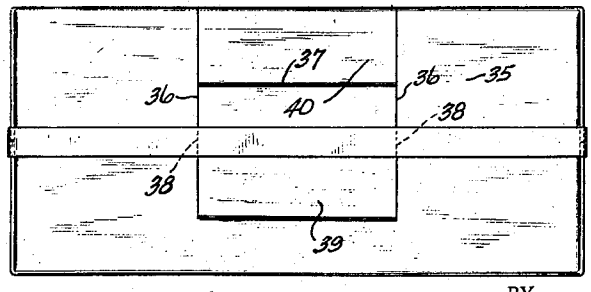

Fig. 11.

INVENTOR.
Albert S. Ethridge
BY
Morsell Lieber & Morsell
ATTORNEYS.

Patented Dec. 27, 1938

2,141,743

UNITED STATES PATENT OFFICE

2,141,743

DISPLAY CONTAINER

Albert S. Ethridge, Milwaukee, Wis., assignor to Hummel & Downing Co., Milwaukee, Wis., a corporation of Wisconsin

Application June 4, 1936, Serial No. 83,512

4 Claims. (Cl. 206—44)

This invention relates to improvements in display containers.

Heretofore, it has been common practice to construct shipping containers of fiber or corrugated board or the like in such a way that access to the interior is effected by opening top or end closure flaps or by opening a shallow hinged cover, or by removing a telescoping cover. The present invention, on the other hand, contemplates a container which is adapted to be opened in an entirely different way so that the opened receptacle is particularly adapted for display purposes.

It is therefore an object of the present invention to provide an improved container openable along a division line which extends around three side walls to form two hinged-together sections. The said division line may be at any point between the top and bottom of the container as the nature of the contents or desire of the user may require. Both of the sections of the container are adapted to contain merchandise so that when the container is open one section may serve as a base for a display, with merchandise therein, and the other section may be supported in an angular position with respect to the section forming the base, there also being merchandise in said other section.

A further object of the invention is to provide a container as above described wherein one of the sections is positionable horizontally on a counter or other supporting surface, and wherein an easel or like supporting means is provided for maintaining the other section in an angular display position with respect thereto, both of said sections, in certain forms of the invention, being adapted to contain a substantially equal quantity of merchandise so that after the mechandise in one of the sections has been dispensed, the two sections can be interchanged in position and merchandise dispensed from the other section.

A more specific object of the invention is to provide novel means for retaining the merchandise in place in the upper section while said section is being opened, and, if desired, while it is in display position.

A further specific object of the invention is to provide a container as above described wherein said retaining means is removable after the display is set up to form a separate advertising poster having means for supporting itself in upright position.

A further object of the invention is to provide a container wherein parts of said merchandising retaining means serve as flanges to guide the sections into closing position with respect to one another and also serve to strengthen and brace the ends of the box during shipment.

A still further object of the invention is to provide a container as above described which may have an easel cut from one wall and foldable outwardly therefrom to support one of the sections in an angular display position with respect to the other section.

With the above and other objects in view, the invention consists of the improved display container and all its parts and combinations as set forth in the claims and all equivalents thereof.

In the accompanying drawings illustrating several of the preferred embodiments of the invention in which the same reference numerals designate the same parts in all of the views:

Fig. 1 is a perspective view of one of the improved display containers in closed shipping condition;

Fig. 2 is a perspective view of said container in open display position;

Fig. 3 is a side elevational view of the container in display position;

Fig. 4 is a perspective view showing how the merchandise retaining means may be removed to serve as a separate advertising poster;

Fig. 5 is a plan view of the easel alone in flat shipping condition;

Fig. 6 is a perspective view of the easel in supporting condition;

Fig. 7 is a perspective view showing a modified form of container in display position;

Fig. 8 is a plan view of one of the end stiffening and guiding members removed;

Fig. 9 is a perspective view of still another form of container in open display position;

Fig. 10 is a sectional view taken on line 10—10 of Fig. 9; and

Fig. 11 is a rear view of the container of Fig. 9 in closed condition.

Referring more particularly to the drawings, first to Figs. 1 to 3 inclusive, the improved container may be formed from a single sheet of fiber board, card board, corrugated board, or the like which has been die cut and assembled to provide an upper section 15 and a lower section 16, the said sections being hingedly connected on a line of fold 17 which extends longitudinally of the rear wall intermediate its height. Thus two box-like sections are provided which are each adapted to contain merchandise. In the forms of container illustrated, both sections are of substantially equal capacity. This, however, is not essential

as one section may be of such size that it contains more merchandise than the other.

The container illustrated in Figs. 1 to 3 inclusive is well adapted for shipment and display of bars of soap as shown, the lower section 16 being filled with those bars 18 and the upper section 15 being filled with loose bars 19. When loose merchandise is thus being carried it is necessary to provide a retaining means for the merchandise in the upper section so that said section can be opened and closed without losing its contents. By referring to Figs. 2 and 4 it may be seen that the retaining means may comprise a panel 20 having lateral extensions 21 connected to the lower portions of recesses 22 in end stiffening or bracing members 23. The containers are packed with merchandise while both sections are in alined horizontal position. Then the bracing members 23 are inserted adjacent opposite ends of one of the container sections and pushed inwardly until the retaining panel 20 engages the merchandise as shown in Fig. 2. A strip of gummed tape 24 may then be secured over the panel 20 with the ends 25 of the tape passing through the recesses 22 so that said ends can be secured to the end walls of the container as illustrated. It will thus be seen that the merchandise in one section is firmly held in position and that each of the stiffening members 23 has flanges 26 projecting outwardly, which flanges serve to guide the section into closing position with respect to the other section, as indicated by the dotted lines in Fig. 1, and additionally serve to brace the ends of the container during shipment and reinforce the container along the division line between the two sections. When the container has been closed to the position of Fig. 1, it may be sealed by the use of a strip of gummed tape 27 applied over the meeting edges in the manner illustrated.

Each of the containers is packed with an easel 28 therein, which easel is originally in flat condition as shown in Fig. 5. The easel consists of foldably connected walls 29, 30, 31 and 32, and the walls 30 and 32 have their upper edges formed with V-shaped recesses 33. In addition the wall 29 is somewhat lower than the wall 31.

When one of the improved containers is received by the retailer he can quickly convert it into an attractive merchandise display. It is first necessary to slit the tape 27 in order to open the box. Next the easel, which is in the condition shown in Fig. 5, is removed and opened out to the position of Fig. 6. The wall 29 of the easel is then placed against the rear wall of one of the sections of the box, and the other section of the box is opened out to the position shown in Figs. 2 and 3 to fit into the recesses 33 of the easel. Thus one of the sections serves as a base, and the other section is firmly held in an angular display position. The retaining panel 20 may bear advertising material as illustrated, and if desired this panel can be left in position in the box. When this is done merchandise is sold from the base section. If the two sections of the container are of equal size and capacity, then, after the base section has been emptied the position of the container may be reversed so that the other section serves as a base. In other words where the size of the sections is the same the easel is capable of supporting either section in angular position with respect to the other. As before mentioned, however, it is not essential that the sections be of equal size, and when they are of unequal size no reversal of position is possible, and the merchandise may be dispensed from both the base section and the section which is supported at an angle. If desired, after the container is opened to the display position shown in Figs. 2 and 3, the retaining panel 20 may be removed from the box and set up as a separate advertising poster in the manner shown in Fig. 4. When so used, it is apparent that the end stiffening members 23 serve as easels to support the poster in upright position.

Referring to Figs. 7 and 8 it will be seen that this type of container is admirably suited for the shipment of cracker or cooky boxes, each of the sections of the container being of a size and shape to snugly receive two or more individual cracker or cooky boxes 34. In view of the fact that these individual boxes 34 are of relatively large size, the use of the retaining panel 20 is unnecessary. However separate stiffening members 23' similar in shape to the stiffening members 23 are used. These stiffening members are provided with upper edge recesses 22' and with outwardly projecting flanges 26' which serve to guide the upper section into closing position with respect to the lower section, and they also serve to stiffen and brace the ends of the container during shipment. When packing the box shown in Fig. 7, it is merely necessary to affix a strip of tape 24' over the boxes in the upper section, as illustrated, the ends of the tape passing through the recesses 22'. A similar easel to that shown in Figs. 5 and 6 may be employed for supporting either of the sections 15' or 16' in angular display position.

As a further modification of the invention, the common rear wall 35 of the container may be formed with vertical slits 36 and with a line of fold 37 extending transversely between the slits, which line of fold is offset from the hinge connection of the box sections, (see Figs. 9, 10 and 11). To open this container it is necessary to slit the gummed tape along the division line of the sections and also to slit the tape transversely along the lines 38 so that the easel forming parts 39 and 40 can be pulled rearwardly in the manner indicated in Fig. 9. This integrally formed easel, due to the position of the line of fold 37, serves to support the upper section in an angular display position as shown in Figs. 9 and 10. The container illustrated is shaped to receive and display elongated boxes 41 such as macaroni, spaghetti or noodle boxes. Retaining and end stiffening and guiding means of the type shown either in Figs. 2 or 7 may be used in connection with the container of Fig. 9.

From the above it is apparent that a unique type of container has been provided, which container comprises two sections, each adapted to contain merchandise, hinged together along a line of fold on a common rear wall, the sections having meeting edges in abutting relationship on a division line extending around three other walls of the container between the top and bottom thereof, the construction being such that one of the sections can be supported in an angular display position with respect to the other, with merchandise in each section. It is also apparent that in certain forms of the invention, due to the particular construction of the container wherein each section is of substantially equal capacity, that either section may be supported in angular position with respect to the other. Thus an attractive display device is furnished which per-

mits the display and dispensing of merchandise from both sections of the container.

Although only a few forms of the container have been shown and described, various other changes and modifications may be made without departing from the spirit of the invention, and all of such changes are contemplated as may come within the scope of the claims.

What I claim is:

1. A display container of fiber or corrugated board or the like comprising upper and lower hinged-together sections, each adapted to contain merchandise, removable stiffening members positioned adjacent the inner surfaces of opposite ends of one of said sections and having portions projecting outwardly therefrom, said flanges being adapted to guide said section into closing position with respect to the other section, and means connected to said stiffening members below the ends of the projecting portions thereof and extending across the container in a position to contact the top of merchandise in the section to maintain said merchandise in position during opening of the section.

2. A display container of fiber or corrugated board or the like comprising upper and lower hinged-together sections, each adapted to contain merchandise, removable stiffening members positioned adjacent opposite ends of the upper section and having recessed flanges projecting outwardly therefrom, said flanges being adapted to guide said section into closing position with respect to the other section, and means connected to the bottoms of the recesses of said flanges for retaining merchandise in position during opening of the upper section, the bottoms of said recesses being flush with the top of the merchandise in the section.

3. A display container of fiber or corrugated board or the like comprising upper and lower hinged-together sections, each adapted to contain merchandise, removable stiffening members positioned adjacent opposite ends of the upper section and having recessed flanges projecting outwardly therefrom, said flanges being adapted to guide said section into closing position with respect to the other section, and a panel connecting said flanges at the lower portions of the recesses for retaining merchandise in position during opening of said upper section.

4. A display container of fiber or corrugated board or the like comprising upper and lower hinged-together sections, each adapted to contain merchandise, removable stiffening members positioned adjacent opposite ends of the upper section and having recessed flanges projecting outwardly therefrom, said flanges being adapted to guide said section into closing position with respect to the other section, and a panel connecting said flanges at the lower portions of the recesses for retaining merchandise in position during opening of said upper section, said panel being removable for use as a separate display card after the container is opened, and the end stiffening members serving as easels to support said removed panel in upright position.

ALBERT S. ETHRIDGE.