Jan. 22, 1963 K. M. R. GRAHN 3,074,327

METHOD AND APPARATUS FOR MAKING FOLD LINES IN FIBROUS SHEET MATERIAL

Filed Nov. 15, 1960

3 Sheets-Sheet 1

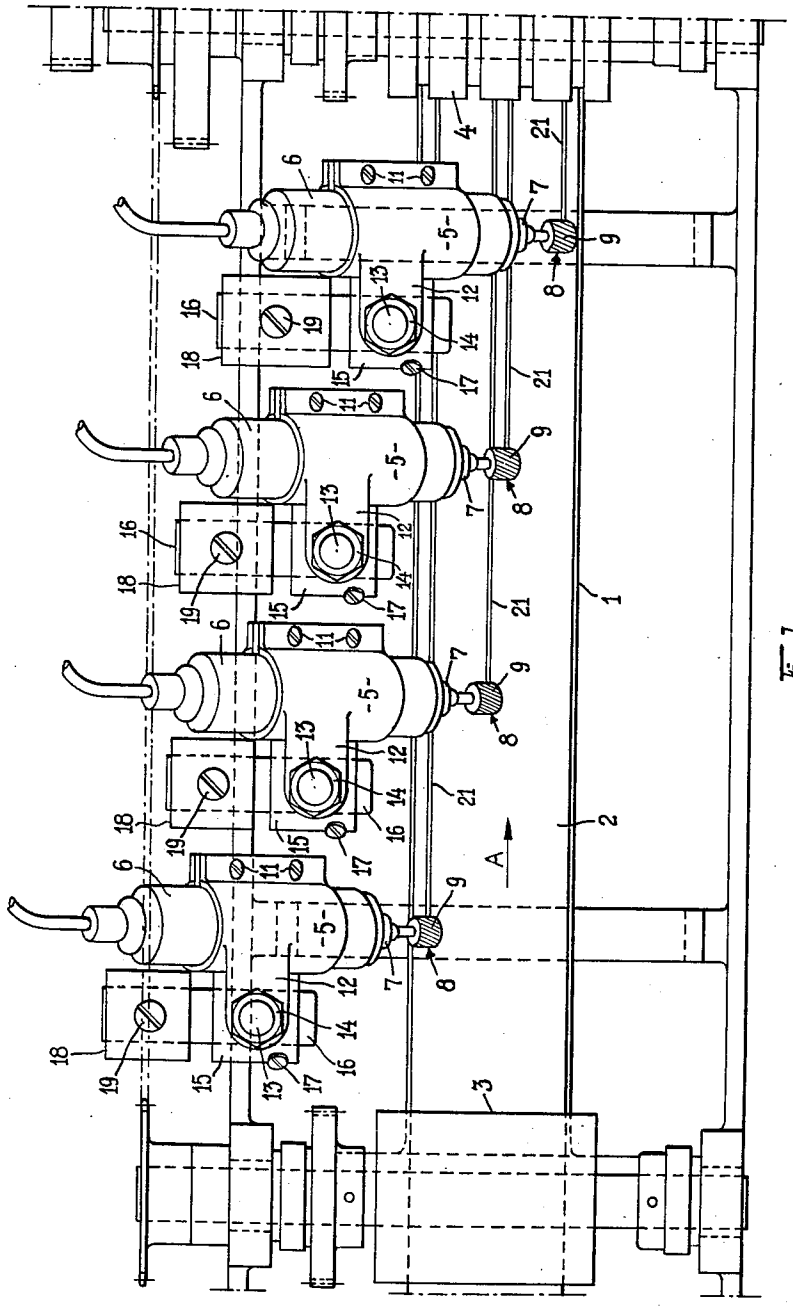

Fig. 1

Inventor
Karl M. R. Grahn
by Sommers & Young
Attorneys

Jan. 22, 1963 K. M. R. GRAHN 3,074,327

METHOD AND APPARATUS FOR MAKING FOLD LINES IN FIBROUS SHEET MATERIAL

Filed Nov. 15, 1960 3 Sheets-Sheet 2

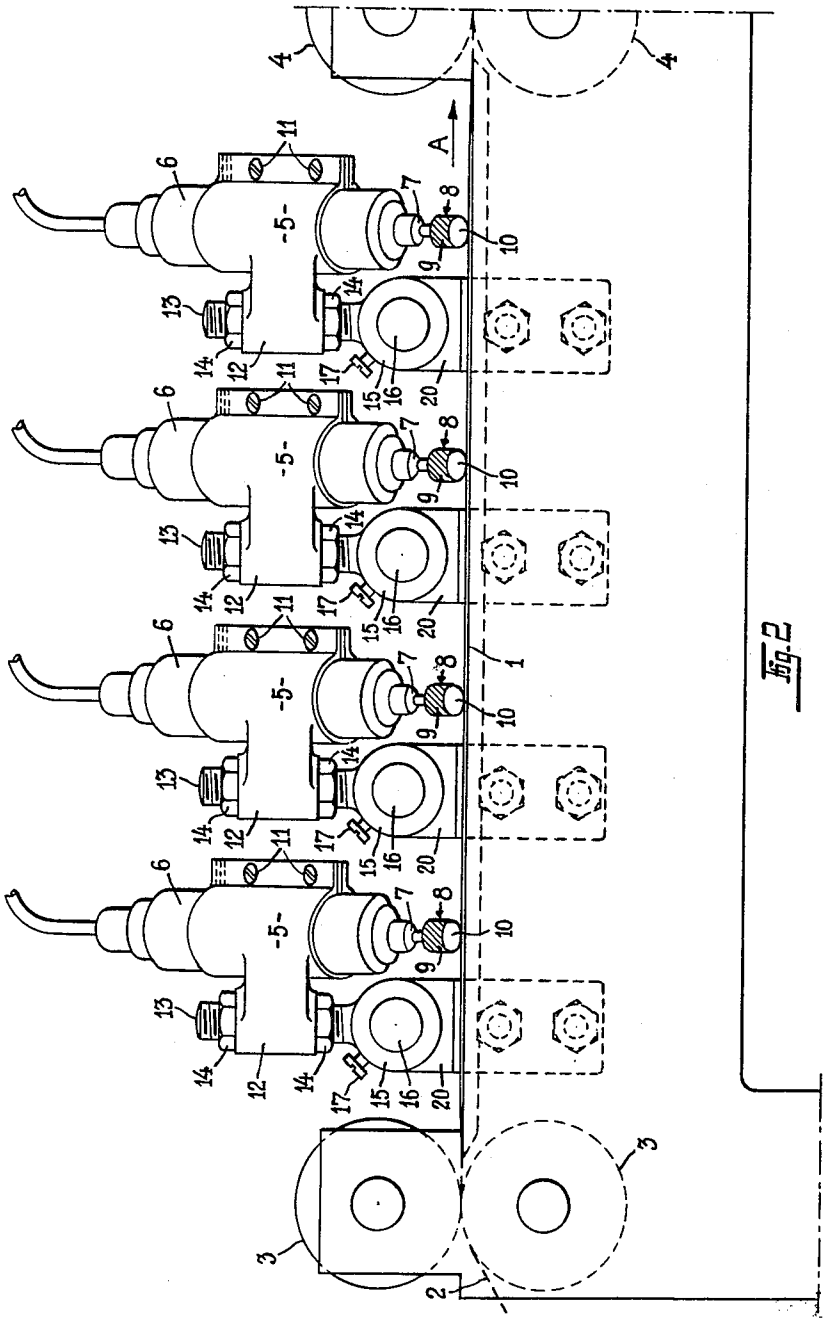

Fig. 2

Inventor
Karl M. R. Grahn
by Sommers & Young
Attorneys

Jan. 22, 1963 K. M. R. GRAHN 3,074,327

METHOD AND APPARATUS FOR MAKING FOLD LINES IN FIBROUS SHEET MATERIAL

Filed Nov. 15, 1960 3 Sheets-Sheet 3

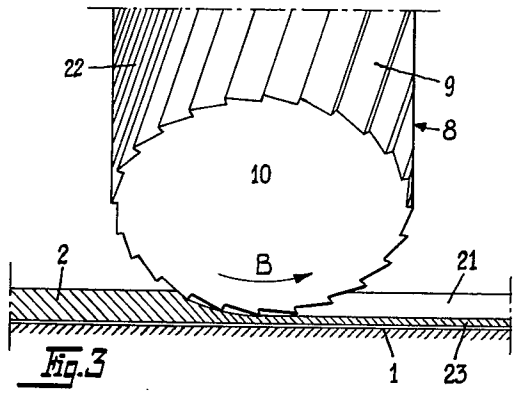

Fig. 3

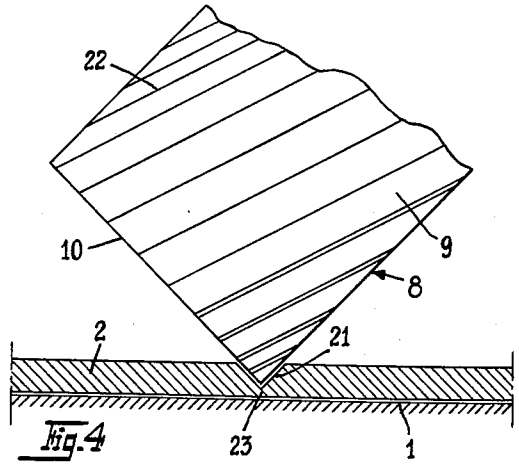

Fig. 4

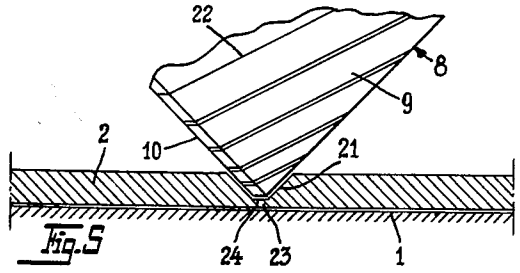

Fig. 5

Inventor
Karl M. R. Grahn
by Sommers & Young
Attorneys

United States Patent Office 3,074,327 Patented Jan. 22, 1963

3,074,327
METHOD AND APPARATUS FOR MAKING FOLD LINES IN FIBROUS SHEET MATERIAL

Karl Martin Runar Grahn, Jonkoping, Sweden, assignor to Svenska Tandsticks Aktiebolaget, Jonkoping, Sweden

Filed Nov. 15, 1960, Ser. No. 69,310
Claims priority, application Sweden Feb. 10, 1960
13 Claims. (Cl. 93—58)

The present invention generally relates to the manufacture of multilateral objects of fibrous sheet material, such as cardboard, veneer and the like, by folding to a polygonal cross section. More particularly the invention relates to making fold lines by removal of material. The invention applies especially to the manufacture of outer boxes or shells and inner boxes or drawers of cardboard or veneer for matches and other articles but is applicable also to the manufacture of other boxes and tubular elements.

In the manufacture of boxes of cardboard the fold lines have hereto as a rule been obtained by creasing whereby a fold or groove has been impressed in the material. A groove made in this way, however, does not secure a sharp right angle between the side walls of the box which therefore does not obtain a desired rigidity. To overcome this disadvantage attempts have been made to obtain a score by removing material. For this purpose a thin rotary saw or milling cutter with straight or V-shaped teeth has been used, but the teeth of such tools are rapidly dulled by sand normally present in cardboard, and the individual teeth of the tool require too frequent sharpening which is expensive. If the teeth are getting dull the friction will heat the thin steel disks to a temperature sufficient to burn the cardboard, and owing to this heating of the steel it will at the same time loose a great part of its hardness. It has also been suggested to use V-shaped cutting stones and grinding disks, but these tools become soon clogged with pulp which gives rise to burning of the cardboard. With all these tools the feeding speed must be very limited.

The main object of the invention is to provide a method and a means whereby fold lines in fibrous sheet material may be cut by removing material and at a high rate without the risk of burning the material.

Another object of the invention is to provide an improved rotary tool for cutting substantially V-shaped grooves in fibrous sheet material which tool during operation is heated to only a low temperature and which can be sharpened in a simple way.

In carrying out the method according to the invention the fibrous sheet material, from which multilateral objects, such as boxes or polygonal tubes, are to be made, is fed between a counter support and an edge of a rotatable file provided with a rifled envelope surface with substantially circular cross section and having its axis of rotation inclined toward the surface of the sheet material, and rotating said file for cutting a substantially V-shaped groove in the said material.

Briefly the apparatus for cutting grooves in fibrous sheet material according to the invention comprises at least one rotatable file provided at one end of a shaft and forming an edge between a rifled envelope surface of a substantially circular cross section and a smooth end surface, a counter support arranged opposite to said edge, a bearing device for holding said shaft in an inclined position relative to said counter support, a feeding device for advancing the fibrous sheet material between said support and said edge, and means for rotating said file for cutting a groove in said material.

The teeth of the file which may be substantially triangular in cross-section and are considerably longer than

the width of the groove to be made form a preferably helically rifled envelope surface. The tooth section, the dimension of the file and its rotational speed should further be so associated or adjusted in relation to each other that the detached chips are ejected from the grooves between the teeth of the file by the centrifugal force. If the chipping angle is positive, as is the case with common cutters, the forward inclination of the tooth front and the air pressure counteract the sliding-off of the chip from the tooth. Therefore the chipping angle is preferably made negative. The centrifugal force must also be sufficiently great, and in a file with a diameter of 13 mm. and a speed of 27,000 r.p.m. the centrifugal force has proved quite sufficient to keep the file clean. The product of the outer diameter in cm. of the rifled envelope surface and the square of the number of revolutions per second should therefore as a rule be at least 130,000, which in the file just mentioned corresponds to 19,000 revolutions per minute. These high numbers of revolutions may be obtained for instance by means of an alternating-current motor for considerably higher frequency than 60 cycles per second and a frequency converter, the file being fixed to a chuck directly on the motor shaft.

Further objects, features and advantages of the invention will be apparent from the following detailed description taken in conjunction with the accompanying drawings which illustrate a preferred embodiment of an apparatus for cutting grooves in cardboard according to the invention.

In the drawings:

FIG. 1 is a plan view of part of an apparatus for cutting grooves in cardboard material according to the invention,

FIG. 2 is a front elevation of the same apparatus,

FIG. 3 is a longitudinal section, on an enlarged scale, of the cardboard material and shows how a file works this when cutting,

FIG. 4 is a corresponding cross-section perpendicular to the plane of FIG. 3, and

FIG. 5 is a sectional view similar to that of FIG. 4 but showing a modified file.

The apparatus shown in FIGS. 1 and 2 is provided with a feed path 1 with a base for a cardboard strip 2 from which blanks adapted to be folded into cardboard outerboxes for matches are to be prepared. The cardboard strip travels upon the base along the feed path in the direction of the arrow A from the left to the right advanced by means of a pair of driven feed rollers 4 while being kept stretched for instance by means of a pair of rollers 3 which are braked by means of a suitable braking device (not shown). When cutting grooves by means of the apparatus according to the invention, the feeding speed of the cardboard strip may be very high, and for practical operation a speed of about 40 m./min. has proved suitable. The cardboard strip 2 is suitably advanced with its grain perpendicular to the longitudinal direction of the feed path 1 in order to prevent the cross dimensions of the outerbox to be made from the cardboard blanks to vary in dependence of the humidity etc. of the outerbox.

Arranged above the feed path 1 and between the roller pairs 3 and 4 respectively are four identical holders 5 for electric motor 6, which holders are distributed along the feed path and also are laterally displaced in relation to each other. Although four motors 5 have been shown, their number may, of course, vary from one and upwards in dependence of the circumstances, viz. the number of sides of the tubular element or multilateral object to be formed of the cardboard blank. The motors 6 may be retained by the holders 5 with the axes of their shafts lying in planes forming an angle of about 90°, and in certain cases up to about 110°, with the longitudinal direc-

tion of the feed path 1, and with their axes inclined an angle of about 45° with respect to the plane of the feed path. When the first mentioned angle varies from 90° the angle between the feed direction of the cardboard strip 2 and the axes of the motor shafts is obtuse. Each motor shaft carries at its lower end a chuck 7 in which a cylindrical file 8 with rifled envelope surface 9 and a plane, or concave, and preferably smooth end surface 10 is detachably fixed by means of a stub axle. The rifles or teeth are preferably helical but have been shown rectilinear in order to simplify the drawings. The holders 5 are made as not entirely closed tubes with somewhat resilient walls and are provided with two flanges which may be pressed towards each other by means of screws 11 for clamping the respective motors 6 which are thus adjustable in axial direction. Each holder is made integrally with an arm 12 provided with a through hole in which there is fitted a threaded bolt 13 which is shown to be vertical in FIGS. 1 and 2 and is rigidly secured to a sleeve 15 perpendicular to the bolt 13. The holder is retained on the bolt 13 on an adjustable level by means of two nuts 14, the axis of the bolt 13 being perpendicular to the longitudinal direction of the feed path and forming an angle of 45° with the motor axis so that the latter will be inclined 45° in relation to the plane of the feed path. The arm 12 is suitably also rotatable upon the bolt 13, so that the angular position of the arm 12 and the holder 5 with respect to the feed direction of the strip 2 may be adjusted. The sleeve 15 with the bolt 13 is arranged slidably, parallel to the plane of the strip 2 and perpendicular to the longitudinal direction of the feed path and the feed direction of the strip 2, on a horizontal bar 16 and lockable to it in the desired axial position by means of a locking screw 17 threaded through the wall of the sleeve. This sleeve 15 may be rotatable upon the bar 16, but alternatively the sleeve may be so locked to the bar 16 that the bolt 13 always is vertical. The locking means may be constituted of a pin secured to the sleeve 15 and engaging a slot extending in axial direction in the circumference of the bar 16. The other end of the bar 16 is inserted in a second sleeve 18 (FIG. 1) and locked to this in the desired position by means of a locking screw 19. The sleeve 18 is made integrally with a plate 20 which is screwed, welded or riveted to the frame of the machine. The arms 12 with the holders 5 and the motors 6 may be adjusted to suitable height and lateral positions as well as with respect to the magnitude of the angle between the rotational axis of the file 8 and the feed direction of the strip 2 by means of the nuts 14 and the screws 11 and 17 so that the files cut grooves 21 with the desired depth and location in the cardboard strip 2 while the latter is advanced between the files 8 and the feed path 1. As is shown more in detail in the enlarged FIGS. 3 and 4, it is only a narrow zone of the lower part of the rifled envelope surface 9 of the file that works the cardboard, suitably in its feeding direction, and cuts off material from it, while there is formed a groove of angular cross-section with an angle of 90° between the walls of the groove. The direction of rotation of the files 8 is indicated by the arrow B in FIG. 3. The laterally proper positions of the grooves in the cardboard strip 2 are preferably adjusted by sliding the sleeves 15 and the holders 5 to suitable positions along the bars 16.

Since the end surface 10 of the files 8 is made plane or concave, it is prevented from pressing against one of the walls of the groove. When that part of the teeth or rifles 22 of the file which works the cardboard has lost its sharpness, the sharpening of the file may be effected in a simple manner by grinding off a corresponding portion of the end of the file.

As the grooves between the teeth 22 in the envelope surface of the file 8 can be kept clean especially because of the great centrifugal force, no unnecessary friction will arise between the file and the cardboard, and therefore there is no risk of any damageable heating, not even in case of very high feeding speeds.

The cardboard strip 2 thus provided with grooves is to be cut into rectangular blanks which are folded along the fold lines to form an outerbox for an innerbox or sliding tray for matches. The side walls of the groove will thus bear against each other in firm contact, whereby the outerbox gets great rigidity.

When folding the box blank along the fold lines formed of the grooves, the centre axis of the folding movement will lie between the intersecting line between the inclined walls of the groove, i.e. the bottom of the groove, and the lower surface of the cardboard strip, i.e. in the bridge 23 that is left below the groove and holds the cardboard strip together. During the folding, that material of the bridge 23 which is situated above the centre axis proper of the folding movement is pressed upwards and will press against the groove walls with the consequence that the walls will get a tendency to bend outwards.

This tendency is considerably reduced if the files 8 are adjusted in such a way that the grooves are cut to a depth amounting to at least 75% and preferably 80% of the thickness of the cardboard, whereby the bridge 23 of cardboard material which is left below a groove and holds the box blank together becomes so thin that only a comparatively insignificant quantity of cardboard material is pressed upwards during the folding operation, while the bridge still has strength enough not to jeopardize the tenacity of the finished box. The side walls of the finished box will therefore be substantially plane, the thin bridge giving the box sharp edges along the grooves which enhances the appearance of the box and is to advantage for example when providing match boxes, placed in a row close to each other, with friction-surfaces.

If the groove is made by means of a cylindrical file which is situated in a plane forming an angle of 90° with the longitudinal direction of the groove, the side walls of the groove, which form an angle of 90° with each other, become entirely plane. However, when the cardboard is folded along the groove, the folding axis will be located at some distance outside the apex of the right angle, as is evident from the above, and when the side walls of the groove get into contact with each other the cardboard will form an angle somewhat smaller than 90°, for which reason tensions and a tendency of the sides to bend or curve outwards arise in the finished box, if not the connective bridge is very thin. However, this inconvenience may be avoided in various ways.

Thus a file having the shape of the frustum of a cone with an edge angle of somewhat more than 90° between the smaller base and the envelope surface may be used so that two planes which extend through the longitudinal upper edges of the groove and intersect each other in the folding centre axis form an angle of 90° with each other. However, a conical file is more expensive in manufacture than a cylindrical file and after grinding off the end surface for sharpening the file, the diameter of the end surface and its peripheral speed will vary.

When using a cylindrical file a similar result may be attained if the file is adjusted so that its axis forms a small angle with a plane at right angles to the longitudinal direction of the groove, which angle preferably is situated behind said plane as seen from the finished portion of the groove so that the axis of the file makes a somewhat obtuse angle to the feeding direction of the cardboard strip. The groove will thereby get a cross-section which is the projection of a circle and the contour of which thus corresponds to one end portion of an ellipse. The groove in its entirety will be widened and the increased space close to the bottom provides more space for the displaced material. If it is desired to apply adhesive in the groove in connection with the folding, a certain space will be obtained for this also.

A similar advantage may also be obtained if the teeth

22 of the file according to FIG. 5 are somewhat bevelled at their ends at an angle of about 45° to the plane of the end surface 10 for forming a flat bottom 24 in the grooves made. The bevelling should in this case be such that the planes representing the side walls of the groove intersect each other on a level corresponding to half the thickness of the bridge 23 or on a somewhat lower level so that space is provided for cardboard material displaced during the folding operation. The file is suitably made of hard metal. A great advantage with the use of files of the kind described above in connection with FIGS. 1–4 inclusive, is also that sharpening of the active end portions of the teeth 22 may be effected in a simple manner by grinding off the end surface of the file as far as corresponds to the worn-out end portions of the teeth 22. The method described above and the apparatus for carrying out said method shown in the drawings should only be regarded as an example of the application of the invention, and, consequently, various modifications are possible within the scope of the following claims without departing from the principle of the invention. Thus, the method and the apparatus according to the invention are not restricted to the manufacture of outerboxes and innerboxes for matches. For instance, by applying the method according to the invention, grooves may be made with another angle than 90° between the groove walls for making tubes and boxes with more or less than four sides, in which case conical files are used having an angle between the end surface of the file and its envelope surface corresponding to the desired angle of the groove. The file should in this case be adjusted in relation to the feed path so that the angle between the plane of said path and the axis of the file is equal to half the desired angle between the walls of the groove. In addition thereto the method and the apparatus according to the invention may also be used for the cutting of grooves in materials other than cardboard. Examples hereof are skillet, particularly such as is intended for the manufacture of outerboxes and innerboxes for matches. Furthermore, even the end surface of the file 8 may be provided with teeth.

The motors may further be made for normal frequency 60 cycles per second and as gearing motors, whereby a frequency converter may be dispensed with. Instead of electric motors e.g. air turbine driven motors may also be used provided that such motors with sufficiently constant speed are available. Finally, one driving motor may be common to several files 8 which are then coupled to the motor shaft by means of suitable power transmission means.

What I claim is:

1. In the manufacture of multilateral objects of fibrous sheet material, the method of making fold lines in the form of substantially V-shaped grooves by removal of material, comprising the steps of advancing said sheet material upon a counter support with respect to a rotatable file with a rifled envelope surface and a smooth, substantially plane end surface; holding said file with the edge between its envelope surface and its end surface in engagement with said sheet material and with its axis of rotation inclined an acute angle with respect to the plane of the sheet material in the point of engagement; and rotating said file at high speed on its axis of rotation for creating said groove.

2. Method as claimed in claim 1 in which the fibrous material is advanced in such a direction that the longitudinal direction of the groove crosses the axis of rotation of the file at a right angle.

3. Method as claimed in claim 1 in which the file is rotated with such a speed, that the product of the outer diameter in cm. of the said edge of the file and the square of the number of revolutions per second of the file is at least 130,000.

4. Method as claimed in claim 1, in which the grooves are cut with a flat bottom extending between inclined side walls.

5. In the manufacture of match boxes of a strip of fibrous material, the method comprising the steps of feeding a continuous strip of fibrous material along a feed path upon a base; cutting a plurality of fold lines, in the form of continuous and substantially V-shaped grooves in the fibrous material being avanced, by means of an edge between a rifiled peripheral surface of substantially rectilinear contour and a smooth end surface on each one of a plurality of rotatable files corresponding in number to the number of fold lines and arranged above said base in engagement with the upper surface of the fibrous material rotating said files at a high speed on individual axes inclined substantially more than zero degrees and substantially less than 90° with respect to said base; and chopping the strip thus provided with fold lines into individual blanks.

6. Method as claimed in claim 5 in which said fibrous material is advanced with its grain perpendicular to said feed path.

7. Apparatus for cutting fold lines in the shape of substantially V-shaped grooves in fibrous sheet material comprising a feed path extending along a surface defined by a base for the fibrous material; a feeding device for feeding the fibrous material along said feed path upon said base; a plurality of rotatable files arranged above said base, each file having an edge formed between a rifled envelope surface with substantially circular cross section and a smooth end surface; a fixed holder for each file adapted to hold the file with its axis of rotation inclined an acute angle with respect to said surface defined by the base; driving means for rotating said files at a high speed; and a device for adjusting the locations of said files laterally and vertically in relation to the feed path.

8. Apparatus as claimed in claim 7 in which the respective axes of the rotatable files form an angle of 70° to 90° with the feed direction of the fibrous material.

9. Apparatus as claimed in claim 7 in which said rotatable files are distributed along the feed path and are laterally displaced in relation to each other with respect to said feed path.

10. Apparatus as claimed in claim 7 in which said driving means for rotating the files comprises an electric motor for each file carried by the respective holder and made for a frequency considerably higher than 60 cycles per second.

11. Apparatus as claimed in claim 7 in which each file has a plane end surface and is made integral with a supporting shaft.

12. Apparatus for cutting substantially V-shaped grooves in fibrous sheet material comprising a feed path extending along a surface defined by a base for the fibrous material; a feeding device for feeding the fibrous material along said feed path upon said base; a plurality of rotatable files distributed along the feed path above the base and laterally displaced in relation to each other with respect to said feed path, each file having a rifled envelope surface with substantially circular cross section and substantially rectilinear contour, and a substantially plane and smooth end surface, the axis of rotation of each file being inclined substantially more than zero degrees and substantially less than 90° with respect to said surface defined by the base; means for rotating said files at a high substantially uniform speed; a separate holder for each one of said files; and a positioning device for adjusting the locations of said files laterally and vertically in relation to the feed path.

13. In the manufacture of multilateral objects of fibrous sheet material having a predominating grain, the method of making fold lines in the form of substantially V-shaped grooves by removal of material, comprising the steps of advancing said sheet material perpendicularly to its grain upon a counter support with respect to a rotatable file

with a rifled envelope surface and a smooth, substantially plane end surface; holding said file with the edge between its envelope surface and its end surface in engagement with said sheet material and with its axis of rotation inclined an angle which is substantially greater than zero degrees and substantially less than 90° with respect to the plane of the sheet material in the point of engagement; and rotating said file on its axis of rotation with such a speed, that the product of the outer diameter in cm. of the said edge of the file and the square of the number of revolutions per second of the file is at least 130,000, for creating said groove.

References Cited in the file of this patent

UNITED STATES PATENTS

313,814	Davis	Mar. 10, 1885
1,289,271	Roesen	Dec. 31, 1918
1,940,106	Snyder	Dec. 19, 1933
2,353,994	Chapman et al.	July 18, 1944
2,445,039	Rusnok	July 13, 1948
2,499,842	Armitage	Mar. 7, 1950