Office de la Propriété Intellectuelle du Canada
Un organisme d'Industrie Canada

Canadian Intellectual Property Office
An agency of Industry Canada

CA 2389438 A1 2001/05/17

(21) 2 389 438

(12) DEMANDE DE BREVET CANADIEN
CANADIAN PATENT APPLICATION

(13) A1

(86) Date de dépôt PCT/PCT Filing Date: 2000/11/03
(87) Date publication PCT/PCT Publication Date: 2001/05/17
(85) Entrée phase nationale/National Entry: 2002/04/29
(86) N° demande PCT/PCT Application No.: EP 2000/010845
(87) N° publication PCT/PCT Publication No.: 2001/034687
(30) Priorité/Priority: 1999/11/09 (TO99A000959) IT

(51) Cl.Int.^{7}/Int.Cl.^{7} C08J 9/12, B29B 7/48, B29C 47/40, B29C 44/20

(71) Demandeur/Applicant:
L.M.P. IMPLANTI S.R.L., IT

(72) Inventeur/Inventor:
CRANA, RENATO, IT

(74) Agent: SMART & BIGGAR

(54) Titre : PROCEDE DE PRODUCTION DE MATIERES POLYMERES EXPANSEES ET EXTRUDEUSE POUR SA MISE EN OEUVRE

(54) Title: A METHOD FOR PRODUCING EXPANDED POLYMERIC MATERIALS AND AN EXTRUDER FOR CARRYING IT OUT

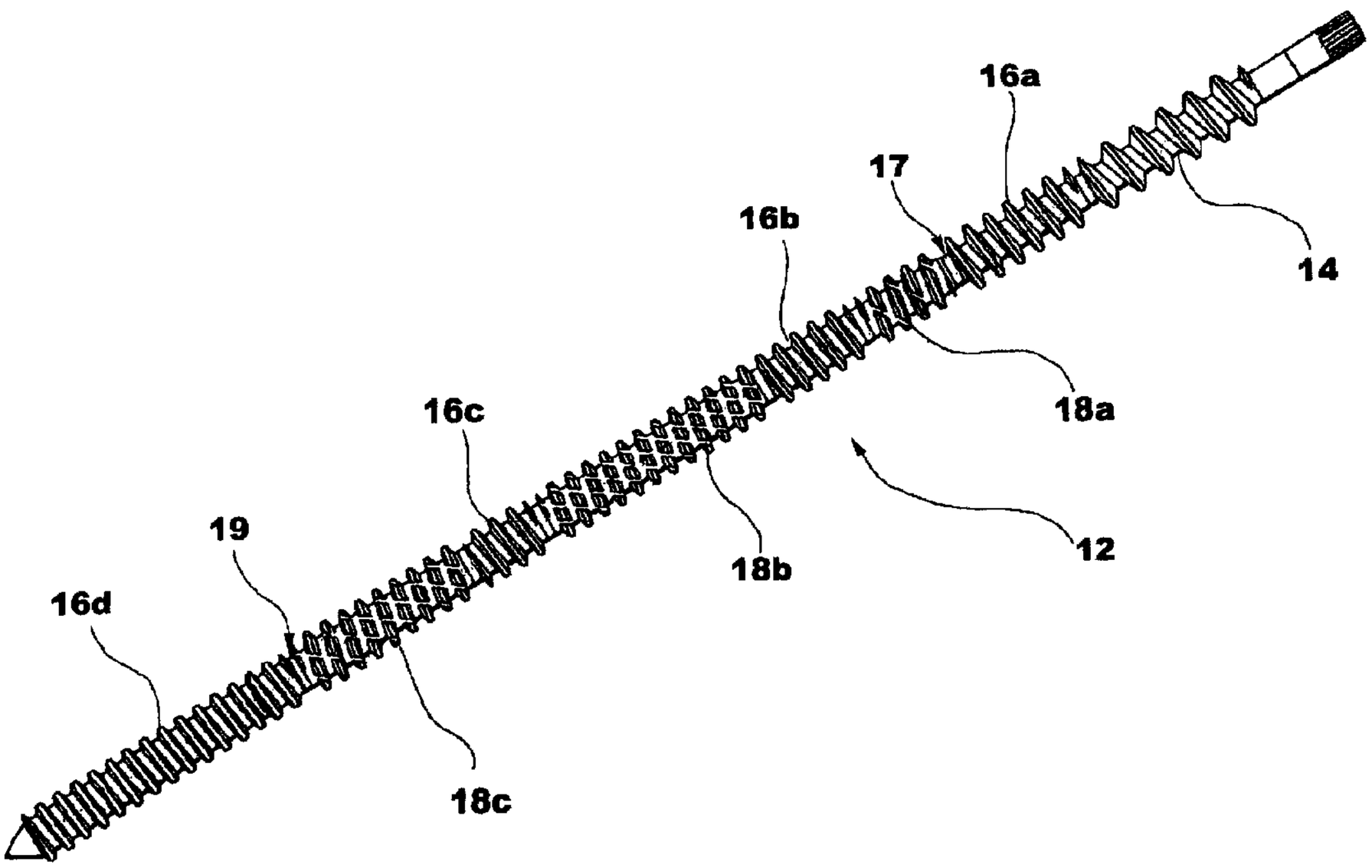

(57) Abrégé/Abstract:
The method is intended for the production of expanded polyolefin materials, having a coefficient of thermal conductivity below 40 mW/°K*m and a density below 50 kg/m^{3}, by the extrusion of a polymeric material with the addition of a physical expansion agent. The extrusion is carried out in a twin-screw extruder with co-rotating, interpenetrating screws (12), with a ratio between axial separation (l) and diameter (D) of between 0.7 and 0.8 and a length/diameter ratio (L/D) between 22 and 30, and in which the said screws (12) have a plurality of mixing areas (back mixing) (18a-c) and a plurality of alternating pumping areas (16a-d) with a length ratio between mixing areas (18a-c) and pumping areas (16a-d) of between 65% and 75%. During extrusion, the screws are rotated at less than 50 rpm.

(12) INTERNATIONAL APPLICATION PUBLISHED UNDER THE PATENT COOPERATION TREATY (PCT)

(19) World Intellectual Property Organization
International Bureau

(43) International Publication Date
17 May 2001 (17.05.2001)

PCT

(10) International Publication Number
WO 01/34687 A1

(51) International Patent Classification[7]: B29B 7/48, B29C 47/40, 44/20 C08J 9/12,

(21) International Application Number: PCT/EP00/10845

(22) International Filing Date:
3 November 2000 (03.11.2000)

(25) Filing Language: English

(26) Publication Language: English

(30) Priority Data:
TO99A000959 9 November 1999 (09.11.1999) IT

(71) Applicant *(for all designated States except US)*: **L.M.P. IMPIANTI S.R.L.** [IT/IT]; Via Torino, 101, I-10088 Volpiano (IT).

(72) Inventor; and
(75) Inventor/Applicant *(for US only)*: **CRANA, Renato** [IT/IT]; Via Amedeo Peyron, 56, I-10143 Torino (IT).

(74) Agents: **RAMBELLI, Paolo** et al.; Jacobacci & Perani S.p.A., Corso Regio Parco, 27, I-10152 Torino (IT).

(81) Designated States *(national)*: AE, AG, AL, AM, AT, AU, AZ, BA, BB, BG, BR, BY, BZ, CA, CH, CN, CR, CU, CZ, DE, DK, DM, DZ, EE, ES, FI, GB, GD, GE, GH, GM, HR, HU, ID, IL, IN, IS, JP, KE, KG, KP, KR, KZ, LC, LK, LR, LS, LT, LU, LV, MA, MD, MG, MK, MN, MW, MX, MZ, NO, NZ, PL, PT, RO, RU, SD, SE, SG, SI, SK, SL, TJ, TM, TR, TT, TZ, UA, UG, US, UZ, VN, YU, ZA, ZW.

(84) Designated States *(regional)*: ARIPO patent (GH, GM, KE, LS, MW, MZ, SD, SL, SZ, TZ, UG, ZW), Eurasian patent (AM, AZ, BY, KG, KZ, MD, RU, TJ, TM), European patent (AT, BE, CH, CY, DE, DK, ES, FI, FR, GB, GR, IE, IT, LU, MC, NL, PT, SE, TR), OAPI patent (BF, BJ, CF, CG, CI, CM, GA, GN, GW, ML, MR, NE, SN, TD, TG).

Published:
— *With international search report.*

For two-letter codes and other abbreviations, refer to the "Guidance Notes on Codes and Abbreviations" appearing at the beginning of each regular issue of the PCT Gazette.

(54) Title: A METHOD FOR PRODUCING EXPANDED POLYMERIC MATERIALS AND AN EXTRUDER FOR CARRYING IT OUT

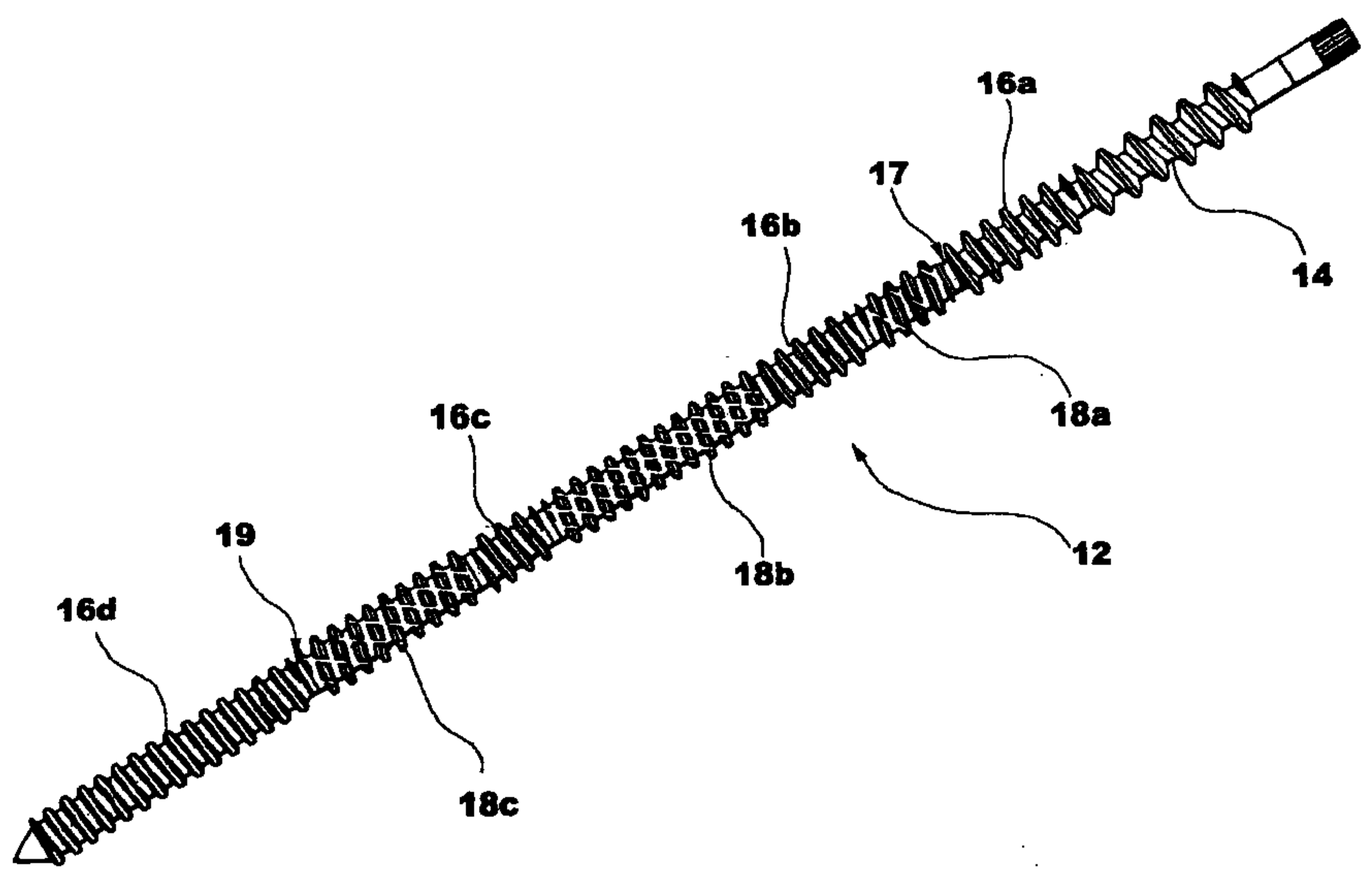

(57) Abstract: The method is intended for the production of expanded polyolefin materials, having a coefficient of thermal conductivity below 40 mW/°K*m and a density below 50 kg/m^3, by the extrusion of a polymeric material with the addition of a physical expansion agent. The extrusion is carried out in a twin-screw extruder with co-rotating, interpenetrating screws (12), with a ratio between axial separation (I) and diameter (D) of between 0.7 and 0.8 and a length/diameter ratio (L/D) between 22 and 30, and in which the said screws (12) have a plurality of mixing areas (back mixing) (18a-c) and a plurality of alternating pumping areas (16a-d) with a length ratio between mixing areas (18a-c) and pumping areas (16a-d) of between 65% and 75%. During extrusion, the screws are rotated at less than 50 rpm.

WO 01/34687 A1

A method for producing expanded polymeric materials and an extruder for carrying it out

The present invention relates to a method for the production of low-density, polyolefin expanded polymeric materials with a closed cell structure, by extruding the polymer with an added physical expansion agent, and to an extruder for carrying out the method.

The most commonly used expansion agents in the production of low-density polyolefinic foams are organic compounds including fluorocarbons, in particular saturated chloro fluorocarbons (CFC) and hydrochlorofluorocarbons (HCFC) and other halogenated hydrocarbons. Such chlorofluorocarbons are viewed as undesirable, however, owing to their negative impact on the environment and, in particular, because they are suspected of being responsible for destroying the protective ozone layer of the Earth's atmosphere and are thus being gradually phased out of use. Other halogenated hydrocarbons which do not damage the ozone layer are used, but their use as expansion agents involves other problems since they are highly inflammable.

Inorganic expansion agents have been suggested to replace CFC's and HCFC's, such as carbon dioxide, nitrogen, argon and water, for example, which are not inflammable and would have little or no impact on the environment. However, when such agents are used by themselves, as single expansion agents, it is not usually possible to obtain foams with the desired density, such as would be achieved using conventional expansion agents. Research in the art has thus turned towards using specific

expansion systems, based on a combination of several expansion agents, towards choosing polymeric materials with specific physical characteristics and towards the use of additives.

U.S. Patent 5 244 927 describes low-density polystyrene foams manufactured using an expansion system constituted by a combination of carbon dioxide, a lower alcohol and water.

U.S. Patent 5 554 661 describes closed-cell expanded ethylene polymer materials with a density that is lower than 150 kg/m^3, obtained using an ethylene polymer having specific melt index and melt tension characteristics and carbon dioxide and/or argon as expansion agents.

The present invention relates on the other hand to a method for producing expanded polyolefin materials with the desired characteristics of low density and low thermal conductivity even when using single expansion agents such as carbon dioxide, inert gases or water, thanks to an extrusion method having particular physical and mechanical characteristics.

One object of the invention is to provide a method for the production of expanded polyolefin materials with a coefficient of thermal conductivity below 40 mW/°K*m and a density of less than 50 kg/m^3, by extruding the polymeric material with the addition of a physical expansion agent, characterised in that:

- extrusion is carried out is a twin-screw extruder with co-rotating and interpenetrating screws, where the ratio between axial separation and diameter is between 0.7 and 0.8, the length/diameter ratio of the screws (L/D) is between 22 and 30

and in which the two co-rotating screws have a plurality of mixing areas (back mixing) and a plurality of alternating pumping areas (transport), with a total length ratio between mixing areas and pumping areas of between 65% and 75%, and in which the said screws are rotated at less than 50 rpm.

The polyolefin polymers used in the method of the invention include polyoleifins such as polyethylene, polypropylene and their copolymers and aromatic alkenyl polymers. The last include polymers of aromatic alkenyl compounds such as styrene, α-methylstyrene, ethyl styrene, vinyl benzene, vinyl toluene, chlorostyrene and bromo benzene. Polymers that can be used include small quantities of unsaturated monoethylene compounds such as C_2-C_6 alkylylic acids or C_4-C_6 dienes which can be copolymerized with the aromatic alkenyl compound, such as acrylic acid, methacrylic acid, acrylonitrile, maleic anhydride, methyl acrylate, ethyl acrylate and vinyl acetate. Use of such copolymers is not particularly desirable, however, since it substantially increases raw material costs.

The method of the invention is particularly advantageous when using expansion agents such as carbon dioxide, nitrogen, argon and helium; however the scope of the invention also extends to the use of aliphatic compounds such as methane, ethane, propane, n-butane, isobutane and n-pentane and aliphatic alcohols with from 1 to 3 carbon atoms. Also included within the scope of the invention is a method using conventional CFC's and HCFC's. The polymeric material can also include the usual additives used in the extrusion of expanded materials, such as nucleising agents, flame-retardants and colourings. Nucleising

agents, used to control the dimension of the cells in foam, include in particular talc, magnesium oxide, calcium silicate, calcium stearate and mixtures of citric acid and sodium bicarbonate.

A further object of the invention is to provide an extruder for carrying out the method described above, including two co-rotating, interpenetrating screws, characterised in that the ratio between axial separation (I) and diameter (D) of the said screws is between 0.7 and 0.8 while the length/diameter ratio (L/D) is between 22 and 30, the screws having a plurality of mixing areas (back mixing) and a plurality of alternating pumping areas, with the length ratio between mixing and pumping areas being between 65% and 75%.

Further characteristics and advantages of the invention will become apparent from the detailed description which follows, with reference to the appended drawings showing specific embodiments by way of non-limitative example, and in which:

Figure 1 is a schematic sectioned view showing a series of components of an extrusion plant for carrying out the invention,

Figure 2 is a sectioned side view of a die arranged downstream of the components of the extrusion apparatus of Figure 1,

Figures 3 and 4 are sections taken on the lines III-III and IV-IV respectively of Figure 2,

Figure 5 is a front view of the die of Figure 2,

Figure 6 is a section taken on the line VI-VI of Figure 2, and

Figure 7 is a side elevation of one of the screws of the extrusion plant for carrying out the invention.

With reference to Figure 1, a tubular extruder body is generally indicated 10, with two co-rotating, interpenetrating screws 12, having the characteristics described above, arranged in the internal cavity thereof. The polymeric material is fed into the cavity of the extruder in an initial delivery area 14 of the screw, by supply means which are not illustrated. The screws 12 include (see Figure 7) four pumping areas 16a, b, c and d spaced by three back-mixing areas 18a, b, and c.

Downstream of the first pumping area 16a (see reference number 17), the screws 12 preferably have an increase in core diameter of between 7 and 14 % and a decrease in external diameter of between 4 and 8% and, downstream of the final mixing area 18c (see reference number 19) an increase in core diameter of between 2 and 5 % and a decrease in external diameter of between 1 and 3 %. These variations are not immediately apparent from any of Figures 1 to 7, owing to the scale of the drawings and to the fact that they are relatively small.

The material is melted in the initial feeder area 14 and transport area 16a; the expansion agent is preferably introduced into the extruder body by injector means, which are not illustrated, in the flow area 16b, immediately downstream of the first back-mixing area 18a.

The pressure at the head of the extruder is between 200 and 280 bar, preferably between 240 and 280 bar. It is clear that the

temperature inside the extruder will be managed by the operator in dependence on the specific characteristics of the polymer being used.

On leaving the final flow/pumping area 16d, the melted polymeric material is fed to a static mixer/homogenizer unit 20. This unit can be of a known type and would preferably consist of the device described in U.S. Patent A-4 222 729 in the name of the Applicant.

In any case, when using the method of the invention, it is preferable for the characteristics of the static mixer unit to be such that it generates a pressure drop of between 30 and 80 bar.

On leaving the static mixer 20, the material is finally fed to a die 22 (see Figures 2 to 6), generally at a pressure of between 100 and 200 bar.

The die 22 has a body 24 with an internal passage 26 for the material to flow through, the cross section of the first portion 28 thereof (see Figures 4, 5, and 6) changing progressively from a circular section 30 to a substantially rectangular section 32 in which one pair of sides 34 is significantly longer than the other pair of sides 36.

The passage 26 has a second portion 38, arranged downstream of the first portion 28, with the cross section thereof (see Figure 3) changing progressively by further lengthening of the sides 34 and shortening of the sides 36.

Finally, two facing lips 40 (see Figure 2) are arranged at the external outlet of the exit passage 26, which cause a reduction in the flow cross section of the passage 28.

Example I

A co-rotating twin screw extruder was used, with screws having the characteristics described earlier and a length to diameter L/D ratio of 24. Further characteristics of the screws are as follows:

- axial separation I: 100 mm
- screw diameter D: 132 mm
- available power: 75 kW.

The polymeric material used was polystyrene with a melt index of between 1,7 and 1,8 g/10min with Vicat point above 100C°.

The material used also included from 0.5 to 1.5% by weight of talc as nucleising agent, from 4 to 5% of a flame-retardant agent and a colouring agent. Pure carbon dioxide was used as the expansion agent, with different percentages of expansion agent being used during the trial, ranging from 2 to 5 % for 100 parts of solid material.

The speed of rotation of the screws was varied during the trial between 18 and 25 rpm.

Pressure at the head of the extruder was maintained at between 200 and 280 bar, with pressure in the die between 100 and 200 bar.

Panels of expanded material were obtained with:

- a width varying between 600 and 800 mm;
- a thickness between 20 and 60 mm;
- a density varying between 35 and 50 kg/m³;
- a cell dimension varying between 0.150 and 0.250 mm.

The coefficient of thermal conductivity was found to vary, immediately after extrusion, between values of between 26.5 and 28.2 mW/°K*m.

These variations are caused determined by the different percentages of expansion agent and of nucleising agent used.

At least 95% of the expanded panels which were obtained had a closed cell structure, determined by ASTM D 2856-A.

The productivity ratio (available power/kilogram of product) ranged between 0.4 and 0.6 kW/kg.

Example II

A co-rotating twin-screw extruder was used, with the screws being of the same type as those used above, with additional characteristics as follows:

- axial separation I: 66 mm
- screw diameter D: 82 mm
- available power 18 kW.

The same polymeric material was used as for Example I, once again varying the quantity of expansion agent between 2 and 5%.

Pressure at the extruder head was varied between 200 and 280 bar, while pressure at the die ranged between 100 and 120 bar.

Panels of expanded material were obtained with:

- a width of between 200 and 450 mm;
- a thickness of between 10 and 25 mm;
- a density of between 35 and 50 kg/m^3;
- a cell dimension of between 0.150 and 0.250 mm.

CLAIMS

1. A method for the production of expanded materials by extrusion of a polymeric material with the addition of a physical expansion agent, wherein extrusion is carried out in a twin-screw extruder with co-rotating and interpenetrating screws (12), with a ratio between axial spacing (I) and diameter (D) of between 0.7 and 0.8 and a length/diameter ratio (L/D) of between 22 and 30 and in which the said screws (12) are rotated at a speed below 50 rpm, said method being characterised in that it is intended for the production of expanded polyolefin materials having a coefficient of thermal conductivity below 40 mW/°K*m and a density of below 50 kg/m³, and the said screws (12) have a plurality of mixing areas (18a-c) and a plurality of alternating pumping areas (16a-d) with a length ratio between mixing areas (18a-c) and pumping areas (16a-d) of between 65% and 75%.

2. A method according to Claim 1, characterised in that, downstream of the first pumping area (16a), the diameter of the core of the said screws (12) increases by between 7 and 14% while the external diameter decreases by between 4 and 8%.

3. A method according to either of the preceding Claims, characterised in that, downstream of the final mixing area (18c), the diameter of the core of the said screws (12) increases by between 2 and 5% while the external diameter decreases by between 1 and 3%.

4. A method according to any preceding Claim, characterised in that a die (22) is arranged downstream of the extruder, having a body (24) with an internal passage (26) for the material to flow through, the section of the first portion (28) thereof changing from a circular section (30) to a substantially rectangular section (32), in which one pair of sides (34) is significantly longer than the other pair of sides (36).

5. A method according to Claim 4, characterised in that the said passage (26) has a second portion (38), arranged downstream of the first (28), the section of which further changes, with the sides (34) being longer and the sides (36) being shorter.

6. A method according to any preceding Claim, characterised in that two facing lips (40) are formed at the outlet of the transit passage (26) which restrict the flow cross section of the said passage (26).

7. An extruder for carrying out a method according to any preceding Claim, which includes two co-rotating, interpenetrating screws (12), wherein the ratio between axial separation (I) and diameter (D) of the said screws (12) lies between 0.7 and 0.8 and the length/diameter ratio (L/D) lies between 22 and 30, the said extruder being characterised in that the screws have a plurality of mixing areas (18a-c) and a plurality of alternating pumping areas (16a-d) with a length ratio between mixing areas (18a-c) and pumping areas (16a-d) of between 65% and 75%.

8. An extruder according to Claim 7, characterised in that, downstream of the first pumping area (16a), the diameter of the core of the said screws (12) increases by between 7 and 14% while the outer diameter decreases by between 4 and 8%.

9. An extruder according to Claim 7 or 8, characterised in that, downstream of the final mixing area (18c) the core diameter of the said screws (12) increases by between 2 and 5 % while the external diameter decreases by between 1 and 3%.

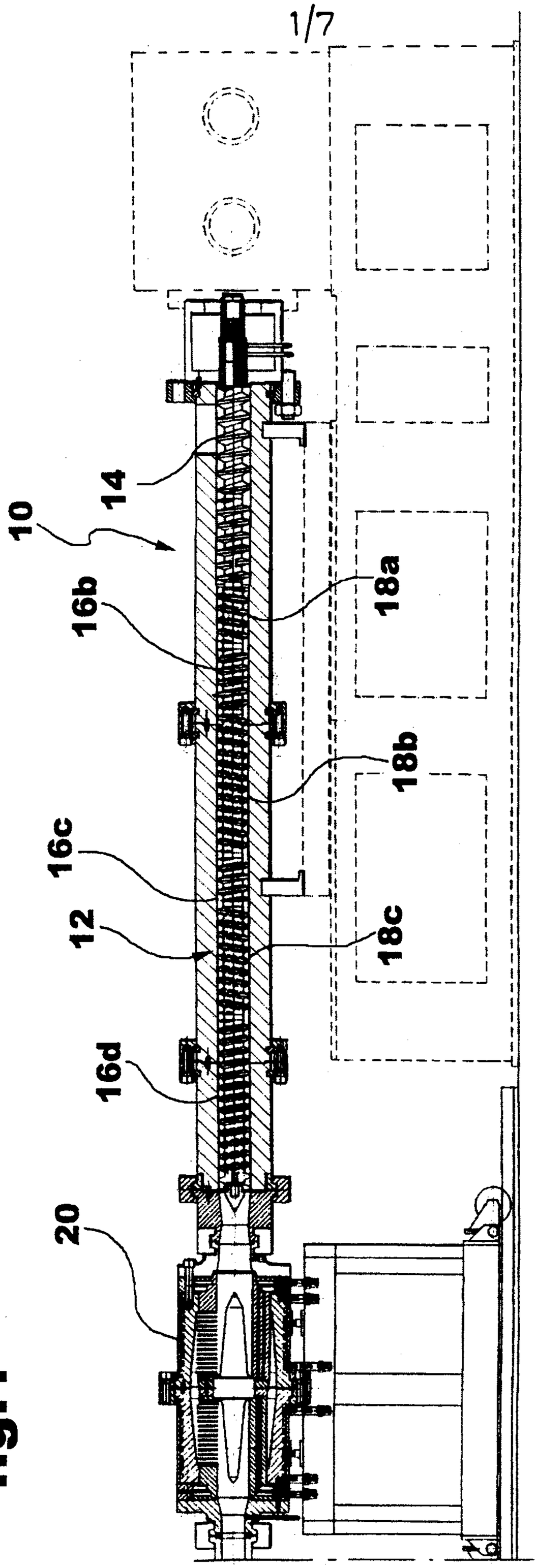

fig.1

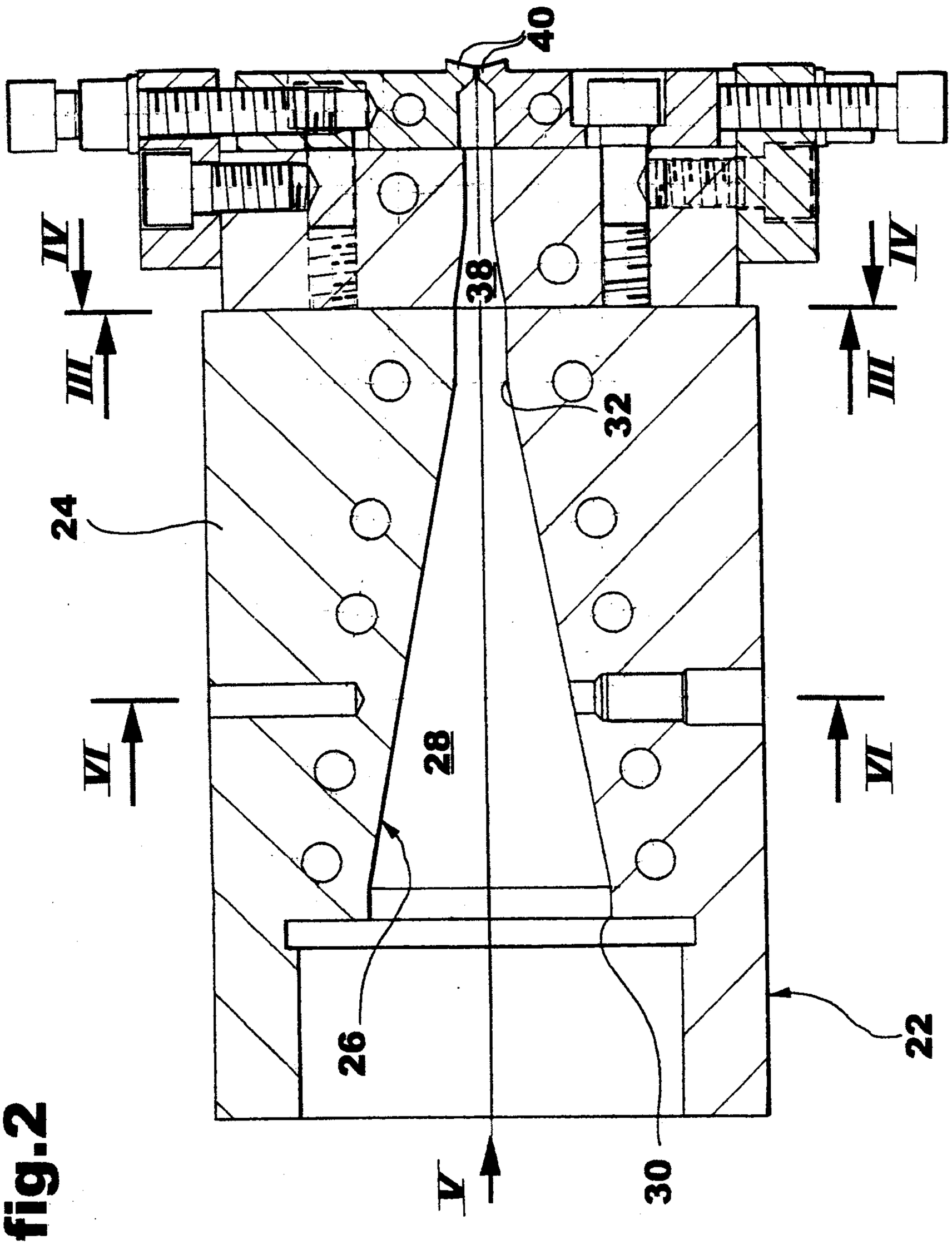

Fig.2

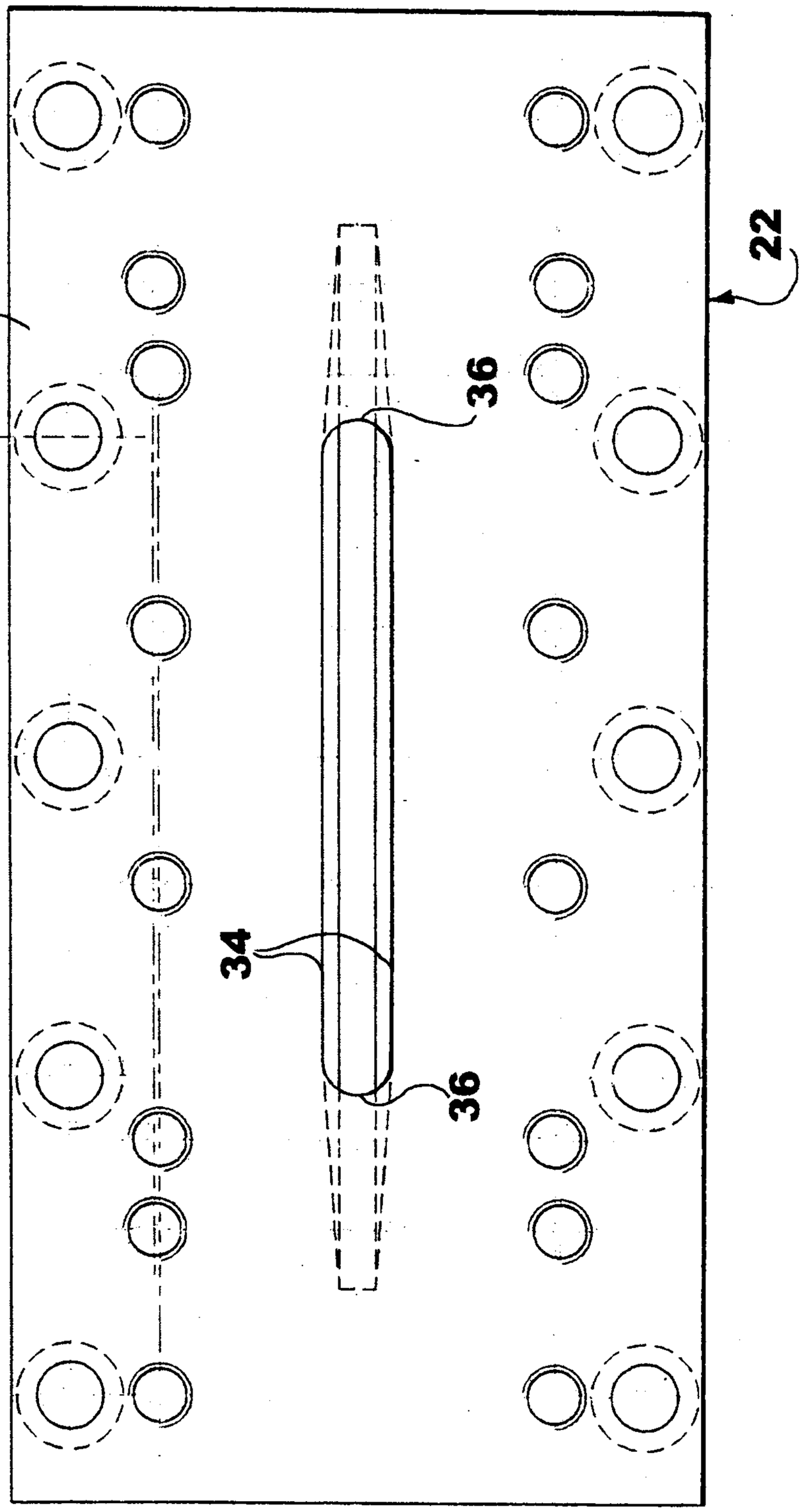

fig. 3

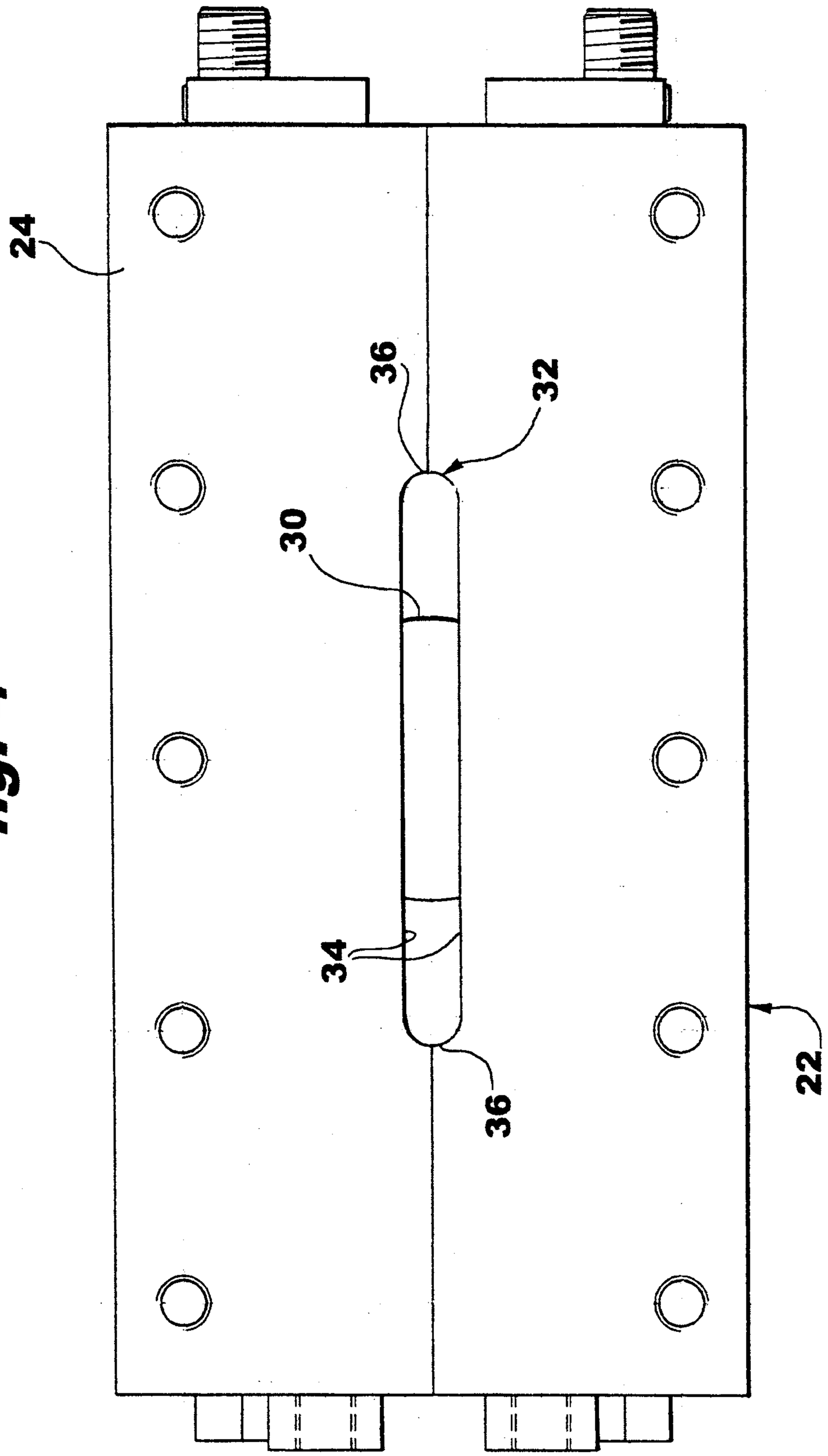

fig. 4

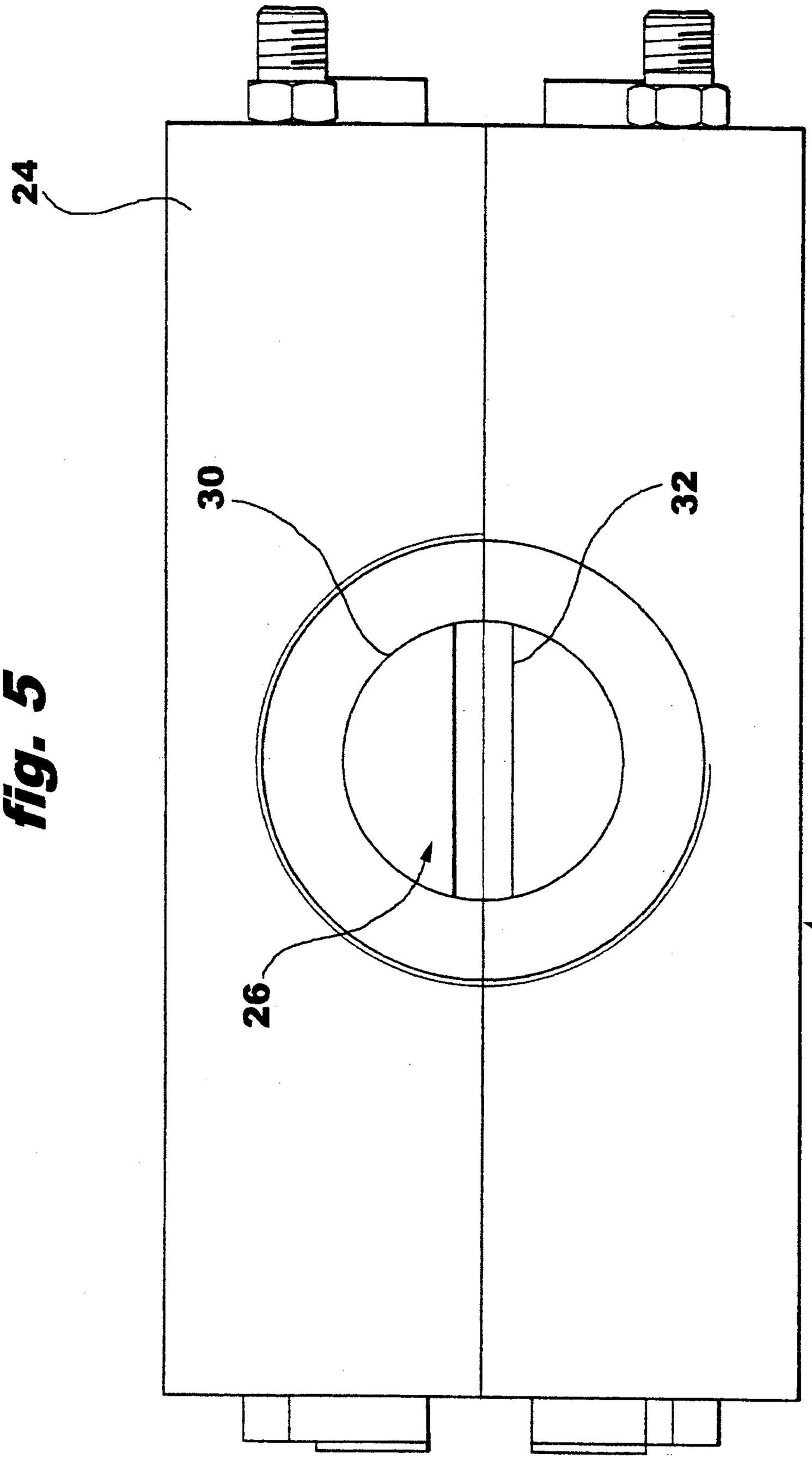

fig. 5

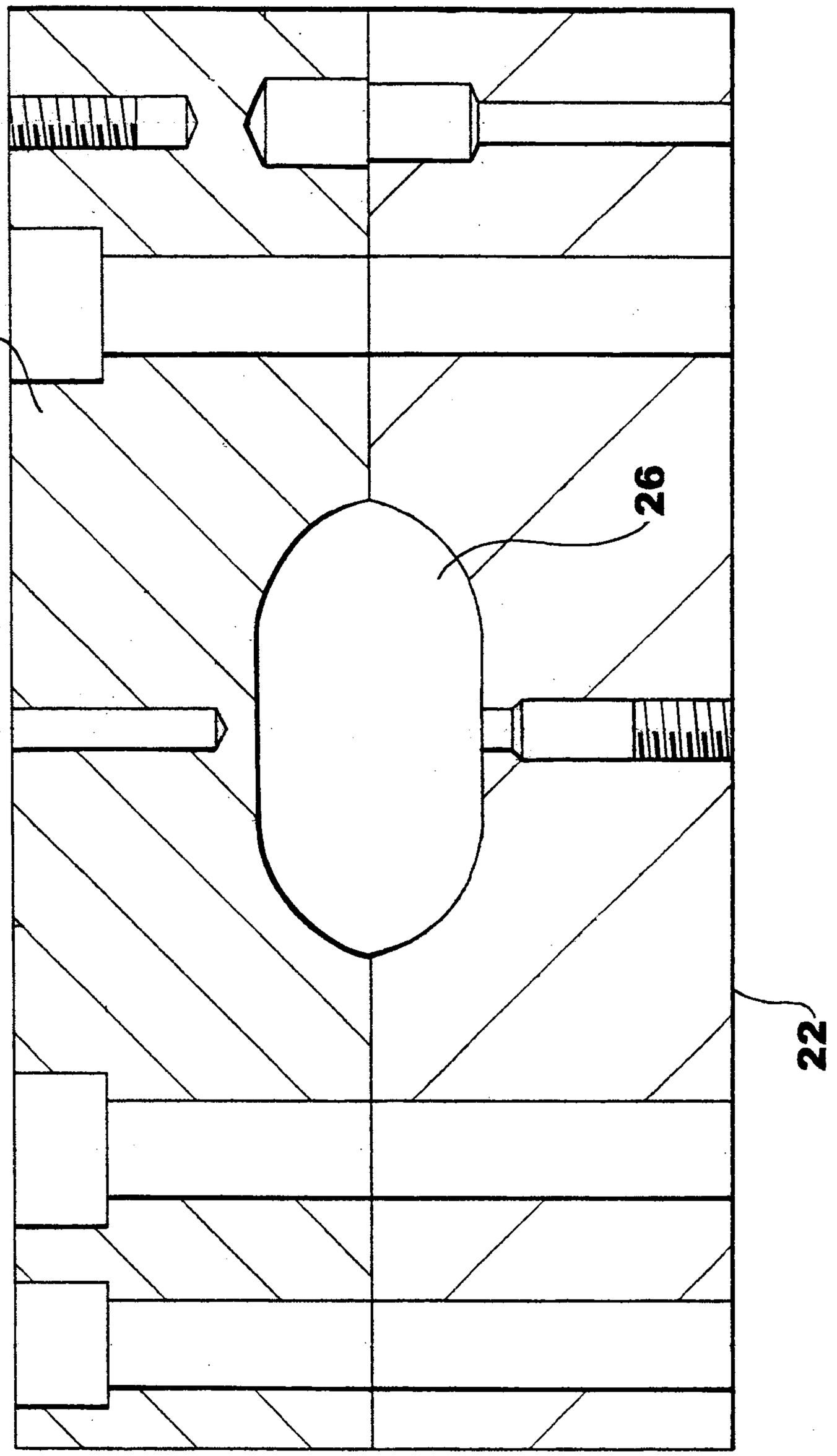

fig. 6

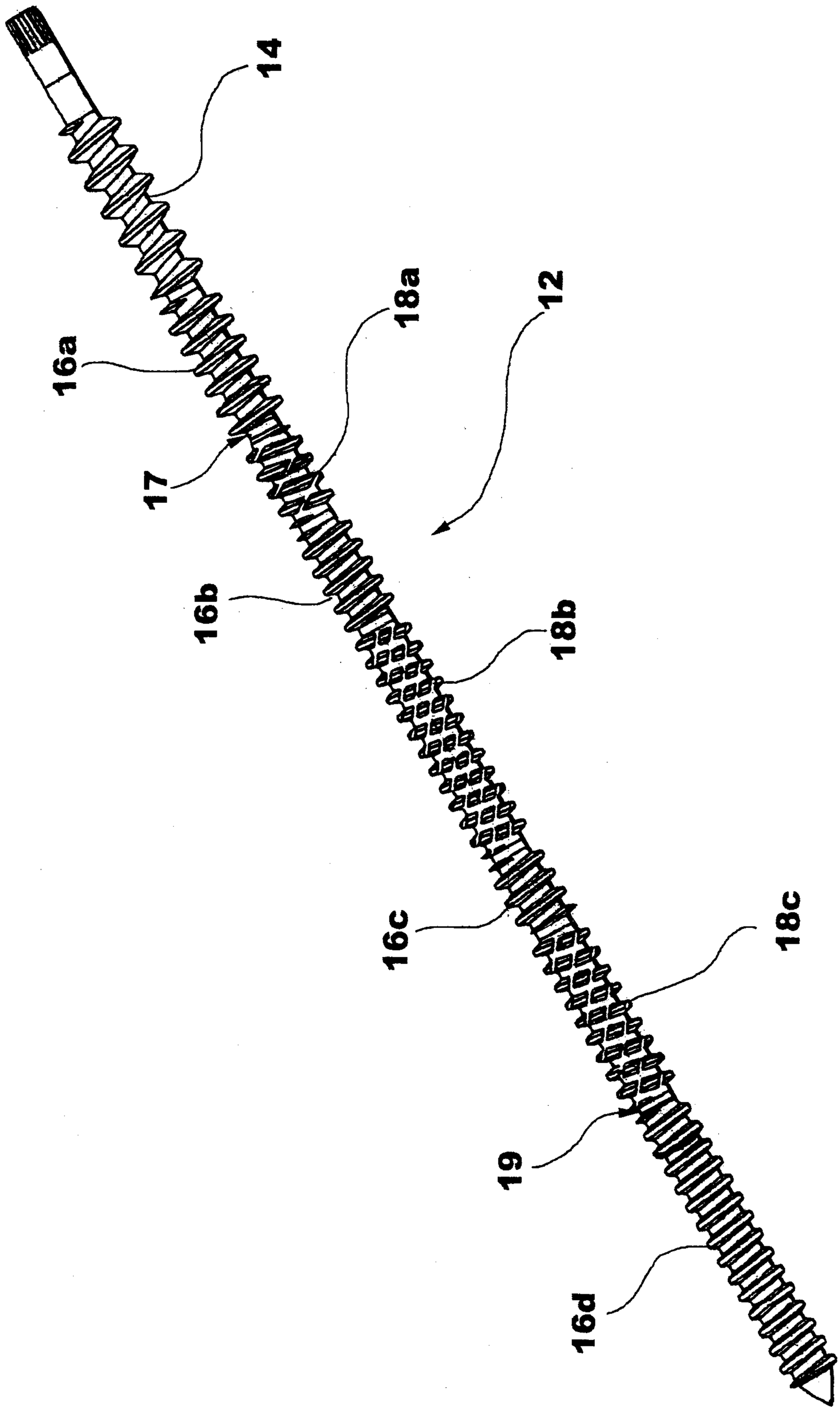

fig-7

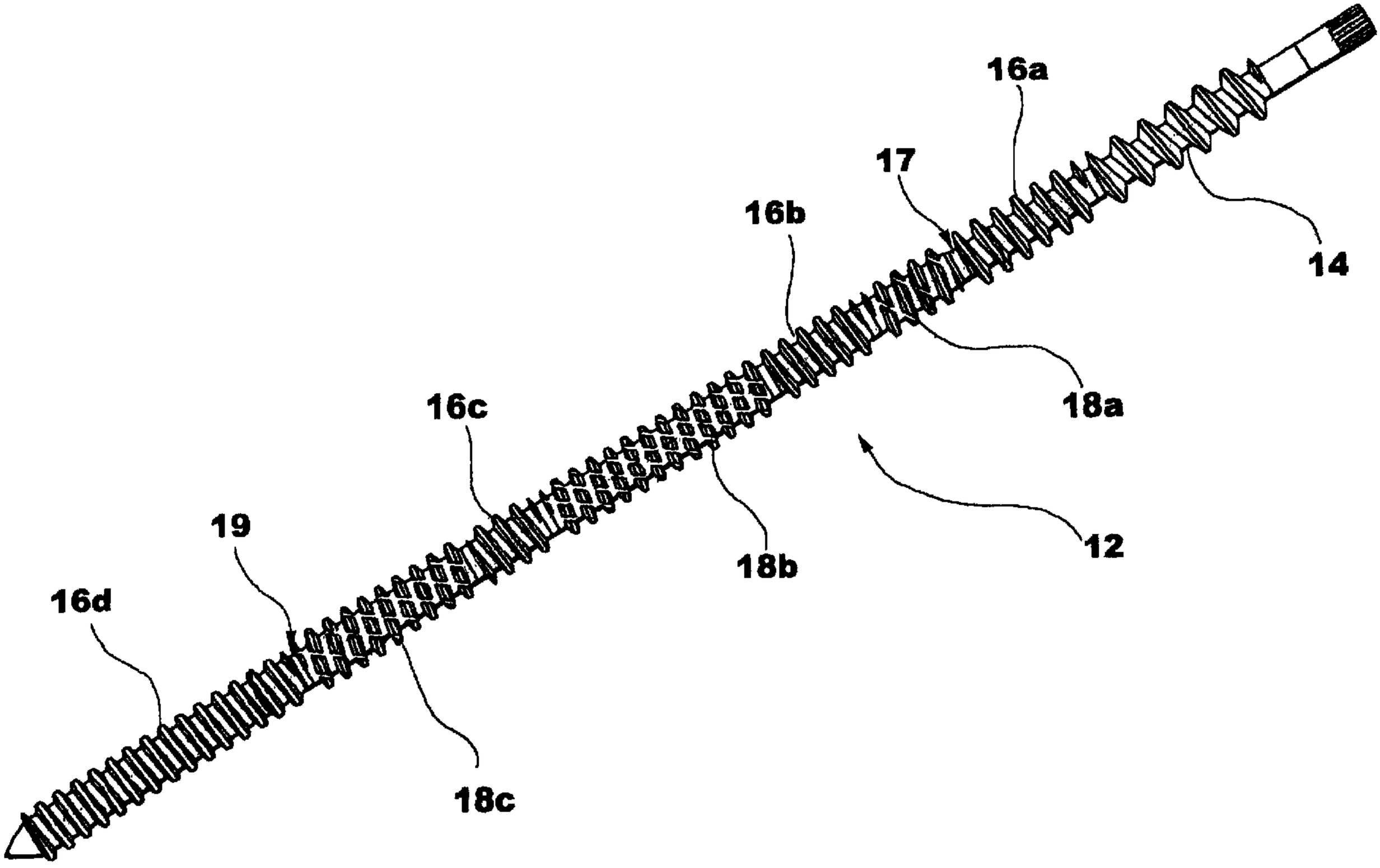
16a
17
16b
14
18a
16c
12
19
18b
16d
18c