J. CARLÉSIMO.

DREDGING APPARATUS.

APPLICATION FILED NOV. 8, 1907.

909,543.

Patented Jan. 12, 1909.

2 SHEETS—SHEET 1.

FIG. 1.

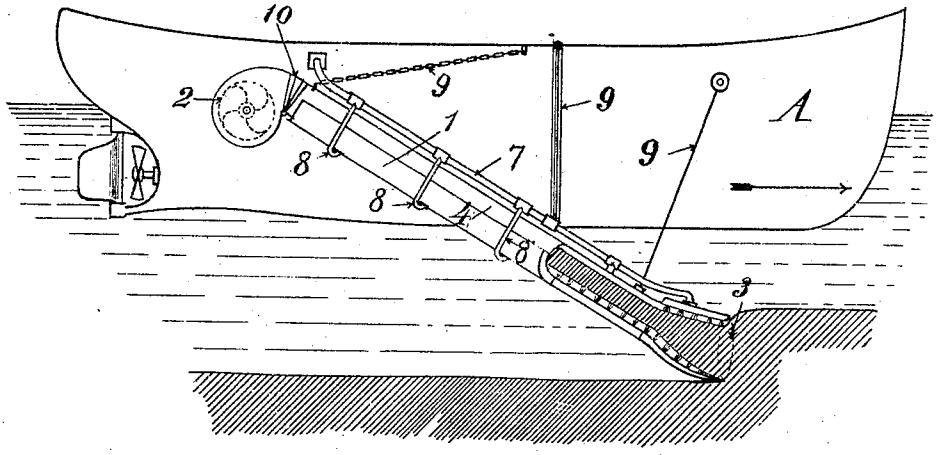

FIG. 2.

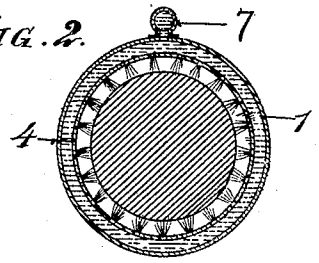

FIG. 3.

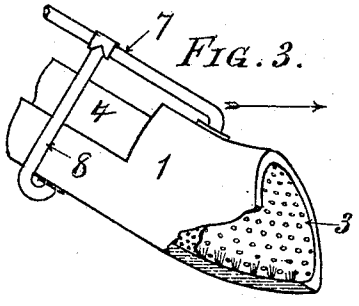

FIG. 4.

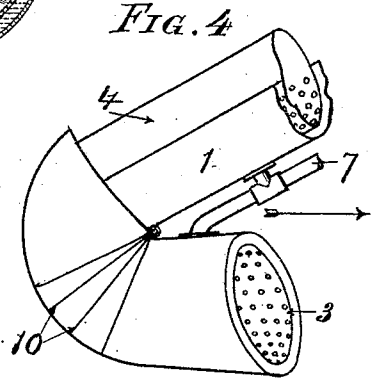

Witnesses

Jesse N. Sutton

C. B. Sommers

Inventor

Julio Carlésimo

By his Attorney

THE NORRIS PETERS CO., WASHINGTON, D. C.

J. CARLÉSIMO.

DREDGING APPARATUS.

APPLICATION FILED NOV. 8, 1907.

909,543. **Patented Jan. 12, 1909.**

2 SHEETS—SHEET 2.

FIG. 5.

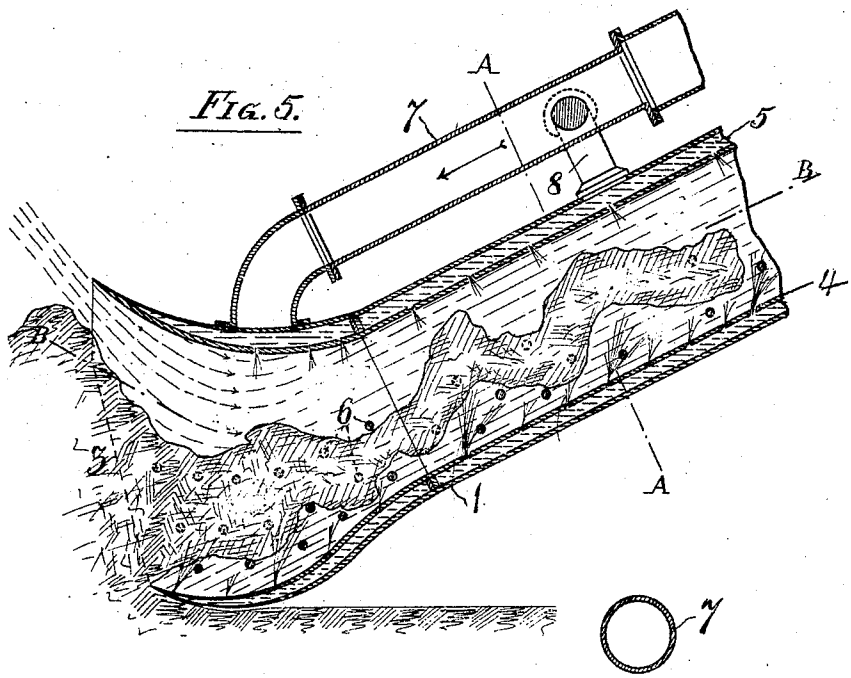

FIG. 6.

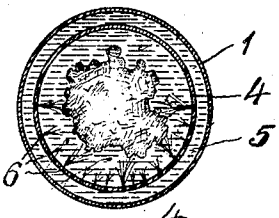

FIG. 7.

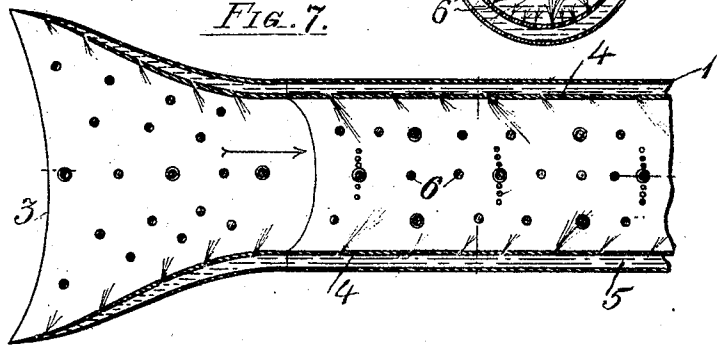

Witnesses

P. Sommers

Jesse N. Sutton.

Inventor

Julio Carlésimo

By his Attorney

THE NORRIS PETERS CO., WASHINGTON, D. C.

UNITED STATES PATENT OFFICE.

JULIO CARLÉSIMO, OF BUENOS AYRES, ARGENTINA.

DREDGING APPARATUS.

No. 909,543. Specification of Letters Patent. Patented Jan. 12, 1909.

Application filed November 8, 1907. Serial No. 401,313.

To all whom it may concern:

Be it known that I, JULIO CARLÉSIMO, a subject of the King of Italy, and residing at No. 745 Calle Tucuman, in the city of Buenos Ayres, Argentina, have invented certain new and useful Improvements in Dredging Apparatus, of which the following is a full, clear, and exact description.

It is a well known fact that all mechanical devices such as screws, wheels or knives for loosening or disintegrating the argillous soil, only yields practical results to a limited extent, since the clay being a rather compact material adheres to such devices and prevents their further working. On the other hand, the adhesive material as well as the material which rapidly settles in the water, as for instance fine sand, mixed or not with mud or slime, and previously loosened or disintegrated, although they follow up their course through the dredging heads and suction and lifting pipes at the commencement of the operation, they very soon settle therein, form obstructions and by choking the pipes, render impossible the perfect working of the entire plant.

On the other hand, if there were some means for preventing the formation of said deposits and obstructions, it would not matter if the dredged material were not reduced to slime or to a much disintegrated condition for allowing the perfect working of the suction dredges; it is well known that said dredges happen to suck up and carry away through their pipes iron, stones, pieces of wood, etc., without the hardness of such things entailing other inconveniences than the dynamical effects exert on the piping and pumps. Therefore, if there were a means for preventing the materials destined to be dredged by suction, such as have been mentioned in the foregoing paragraph, from settling within the pipes and adhering to the same, there would be no necessity of much disintegrating but it would be, to the contrary an inconvenience to form with said materials, by means of mechanical devices and the addition of water, a pulp or slime of more or less consistence adapted to be sucked up, since such transformation and addition of liquid would mean an increase of labor which, supposing the above conditions to exist, might be dispensed with. Besides such reduction or disintegration of the material dredged, obtained by the addition of water, offers a serious disadvantage; the slime or mud thus produced is generally carried away, by means of pipes to land, or to compartments provided in scows (pontoons or else on the dredge itself). In the latter case, the material transported is sort of slime or liquid mud, in the former case, if sludging is to be carried out, the settling goes on very slowly. Similarly, if sludging is to be carried out under water, the use of such liquid mud is most inconvenient as any current is liable to carry it away.

By making use of my system, lumps of material very little disintegrated, such as lumps of argil, for instance, are conducted away; these lumps are carried along with water, but without being intimately mixed therewith, to the deposits or reservoirs, where said water may easily be caused to over-flow, thus realizing an enormous saving in the transportation of the material and in the time required for its settlement. I therefore devised the lubrication, of the inner walls of the dredging head as well as of the suction pipes, and also the pumps or turbines and of the forcing pipes, by means of water, air or steam, jointly or separately, under pressure and in the manner which I shall now proceed to describe.

In the accompanying drawings I have shown an embodiment of a suction device constructed in accordance with my invention wherein—

Figure 1 is a schematic view of a suction device and dredge in working position. Fig. 2 is an enlarged cross sectional view representing a column of argillous clay surrounded by the cylindrical lubricating layer. Fig. 3 is an enlarged detail view of a suction pipe, the mouth of which is provided with internal perforations for producing the lubricating steam or water jets and the conducting tubes of said water or steam. Fig. 4 is a similar view of a modified form of pipe mouth adapted to work by dragging, whereas the pipes shown in Figs. 1 to 3 work by pushing. Fig. 5 is a longitudinal vertical section of suction pipe and mouth. Fig. 6 is a section on line A—A Fig. 5 and Fig. 7 is a horizontal section on line B—B Fig. 5.

Corresponding and like parts are referred to in the following description and indicated in the several views of the drawings by the same reference characters.

Referring more particularly to said drawings, the suction device comprises a pipe 1,

the upper part of which is in communication with a turbine or similar device 2. The lower end of said device forms the mouth or head 3, which is preferably flared and provided with a sharpened edge to more readily cut out the soil. Within the pipe 1 is concentrically mounted a smaller pipe 4 forming an annular chamber 5 which is closed at the mouth by the end of said inner pipe coming into contact with the end of the suction pipe. A lubricating medium such as steam, water or air under pressure is supplied to the annular chamber 5 from whence it enters the pipe 4 through a plurality of perforations 6 formed in the latter. Said lubricating medium may be supplied to said chamber by any suitable means such as a pipe 7, running parallel to the suction pipe and communicating with the chamber 5 by a plurality of connecting branch pipes 8. The position of the suction device and the mouth may be conveniently adjusted by means of suitable members 9 which connect the pipe to the scow or dredge A and by means of flexible joints 10.

On connecting the suction device to the dredge by the means above described or any other suitable means, the head of said device is lowered in order to cause the same to enter into the clay or mud. In this position, the enormous actual energy of the propeller of the vessel, of which the speed should be from one to two meters per second, is to a large extent used for overcoming the resistance caused by the cutting of the clay and the counter pressure of the clay itself pushing the same with great force towards the interior of the suction device, in a direction favorable for the conveyance of the material. It is to be understood that the head of the suction device and the pipe itself, as well as its swivel joints and supports should be constructed in a convenient manner in view of said enormous force. Under the pressure produced, the cutting edges of the suction pipe mouth opens the argillous soil the same as would a plow and collects the same, and owing to the action of said pipe, which is caused to advance by the traveling vessel, and to the atmospheric pressure, the argillous soil ascends by sliding within a liquid cylinder formed by the water under pressure projected through the perforations of the pipe 4, until the dredged material arrives at the storing compartments.

In case it is desired to conduct the material discharged by the dredge ashore by means of pipes or channels, the same construction may be made use of, by constructing such piping or channels with double walls, in order to avoid the obstruction of the same which actually occurs most frequently in this kind of conducting elements.

I claim:

1. In a dredging apparatus, a suction device comprising an outer conduit, a conduit mounted within the latter forming a chamber, means to supply a lubricant to said chamber, and means to inject the lubricant from said chamber onto the material passing through the inner conduit.

2. In a dredging apparatus, a suction device comprising an outer conduit, a perforated conduit mounted within the latter forming an annular chamber closed at the receiving end of the conduit, and means to supply a lubricant to said chamber, for the purpose specified.

3. In a dredging apparatus a suction device comprising an outer tube having an enlarged receiving end, a tube mounted within said outer tube in contact therewith at said receiving end and forming an annular chamber in rear of the latter, means to supply a lubricant under pressure to the chamber and to the interior of the inner tube for the purpose specified.

4. In a dredging apparatus, the combination with a conveyer conduit and means to produce a suction therein, of means for injecting in said conduit a medium capable of preventing the settling of substances being conveyed.

5. In a dredging apparatus, the combination with a conveyer conduit and means to produce a suction therein, of means for injecting in said conduit a medium under pressure capable of preventing the settling of substances being conveyed.

In testimony whereof I affix my signature in the presence of two witnesses.

JULIO CARLÉSIMO.

Witnesses:

ANTº L. BELLO,

JULIO DEL RAMERU.