Dec. 23, 1924. 1,520,421

F. E. KOLAR

ELECTRICAL CONNECTER AND SUPPORTING DEVICE

Filed June 21, 1921 2 Sheets-Sheet 1

Fig. 1.

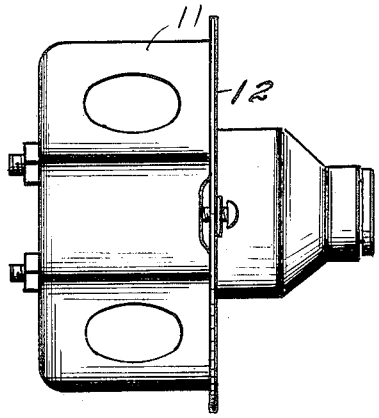

Fig. 2.

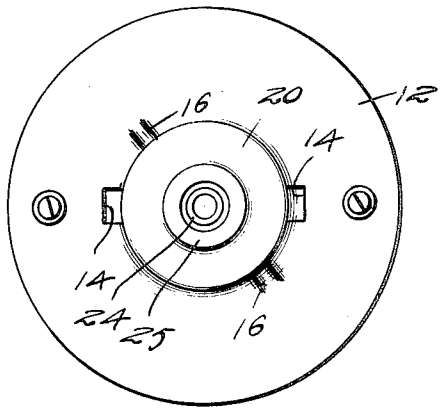

Fig. 3.

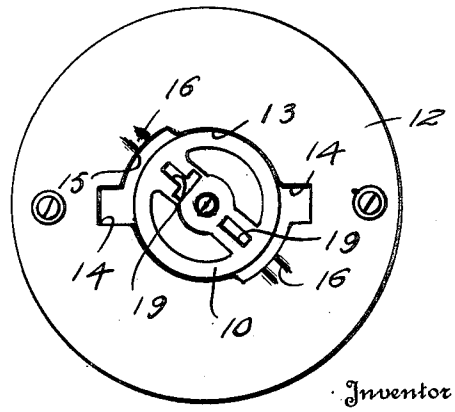

Inventor
F.E.Kolar
By Thomas R. Harney
Attorney

Dec. 23, 1924. 1,520,421

F. E. KOLAR

ELECTRICAL CONNECTER AND SUPPORTING DEVICE

Filed June 21, 1921 2 Sheets-Sheet 2

Fig. 2.

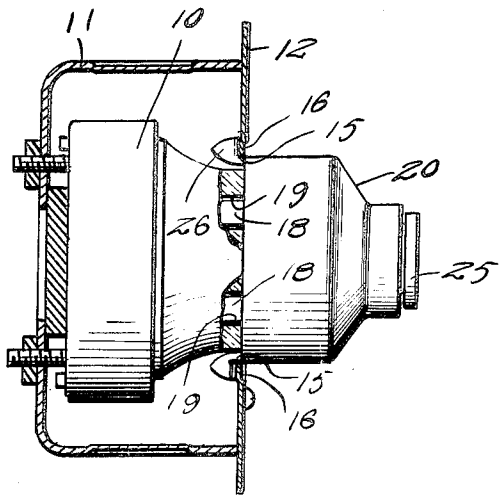

Fig. 4.

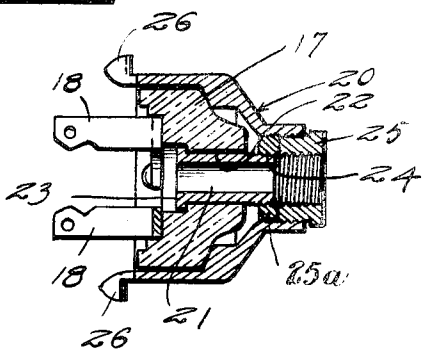

Fig. 5.

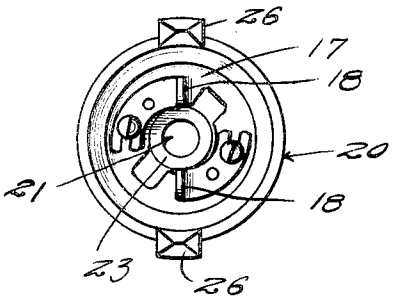

Fig. 7.

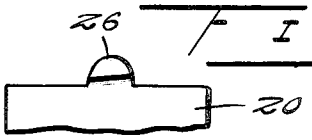

Inventor

F. E. Kolar

By Thomas R. Harner

Attorney

Patented Dec. 23, 1924. 1,520,421

UNITED STATES PATENT OFFICE.

FRANK E. KOLAR, OF ST. PAUL, MINNESOTA.

ELECTRICAL CONNECTER AND SUPPORTING DEVICE.

Application filed June 21, 1921. Serial No. 479,326.

To all whom it may concern:

Be it known that I, FRANK E. KOLAR, a citizen of the United States of America, residing at St. Paul, in the county of Ramsey and State of Minnesota, have invented certain new and useful Improvements in Electrical Connecter and Supporting Devices, of which the following is a specification.

My present invention relates generally to an electrical connecter and supporting device for use with the ordinary type of plug and socket switch in which type of switch the contact fingers of the plug move into the socket member and between spring contact pieces of the latter, the connection depending for its integrity and strength upon the frictional engagement of these last mentioned parts so that little if any real support is afforded connections or wires leading from the plug. It is the object of my invention to supplement these parts in a simple effective manner with means whereby to lock the plug in engaged relation with the socket so that material and efficient support is afforded connections leading from the socket and useful as for instance supporting lamp fixtures and other articles while at the same time adapting the plug to ready removal and reconnection in an interchange of fixtures or implements supported thereby.

In the accompanying drawings which illustrate my present invention and form a part of this specification,

Figure 1 is a side view showing the plug and socket locked in connection with one another and in position to support a side-wall lamp fixture,

Figure 2 is a central longitudinal section through the socket and its support,

Figure 3 is a face view thereof,

Figure 4 is a central longitudinal section through the plug and its housing, and

Figure 5 is a face view of the parts shown in Figure 4.

Figure 6 is a face view of what is shown in Figure 1.

Figures 7 is a fragmentary plan of the plug housing.

Referring now to these figures I have in Figures 1, 2 and 3 shown the socket member 10, which is of conventional construction, secured within a support in the nature of a junction box 11 whose cover is in the nature of a face plate 12 having a central opening 13 exposing the plug receiving end of the socket member 10. It is to be understood however that various other means of support may be utilized for the connection of the socket member 10 so long of course as the support is of a nature making it possible to secure the face plate 12 around the plug receiving end of the socket member.

The face plate 12 has recesses 14 at diametrically opposite sides of its opening 13, and from these recesses slots 15 are formed extending in the same direction from the recesses and partly around the central openings 13. Intermediate the end of these slots 15, the face plate has adjacent to the edges of the slots indented portions 16 for a purpose which will be presently described.

In further accord with my invention the plug 17 of conventional form, with outstanding contact fingers 18 to enter the cavities 19 of the socket member 10, is housed within a cup-shaped housing 20 provided with a central opening. The plug 17 and housing 20 are relatively rotatable by virtue of a hollow pin 21 extending through the central opening 22 of the plug, whose headed inner end 23 prevents displacement of the plug 17 and whose outer threaded end 24 is screwed into a ring 25^a engaging threads within the housing 20 around its opening in such manner as to permit of the reception of a bushing 25 also threaded in the opening of the housing, which has a threaded bore of proper diameter to receive a pipe or bracket tube of an electric lamp fixture.

The free edge of the housing terminates substantially flush with the face of the plug 17 and is provided at diametrically opposite points with extending lugs 26 adapted to be projected through the diametrically opposed recesses 14 of the face plate 12, these lugs having inclined shoulders adapted to movably engage the inner surface of the face plate 12 so that upon partial rotation of the hollow pin and plug housing with respect to the face plate the shanks of the lugs move within the slots 15 until the lug shoulders are moved past the indented portions 16 of the face plate, when the lock connection is completed.

With the plug and its housing arranged as in Figure 5, with the fingers 18 and lugs 26 in alinement, the fingers are introduced

to and shoved into the cavities 19 of the fixed socket, and by the engagement of the fingers with the socket the plug is held in non-rotatable position. As the fingers are shoved into the cavities the lugs 26 enter their recesses 14, and then by a slight twist of the housing (which is accomplished through a turning motion imparted to the lamp fixture that is usually attached to the bushing 25) the housing is turned on the plug and the lugs 26 are caused to frictionally engage the inner face of the face plate, thus drawing the plug and housing into close relation to the socket and face plate.

Upon such engagement the heads of the lugs will project inwardly beyond the inner surface of the face plate 12 so that the above described operation of completing the locking may be readily accomplished. While in the locked position the plug housing will be prevented from accidental rotation in a reverse direction by the engagement of the indented portion 16 of the face plate with the lug shoulders.

It is also obvious however that by simply grasping the plug housing and rotating the same in a counter-clockwise direction, disengagement of the parts may be readily effected so as to permit of an interchange of lamps or implements attached as usual by a cord leading from the plug.

When the fixture is detached the hollow pin 21 supports and retains the plug 17. When the fixture is being attached for use, the electric wires which pass through the hollow pin 21 and bushing 25 are protected and free from strain or entanglement; the housing and pin may be turned or twisted with facility in relation to the non-rotatable plug and its socket, and the locking lugs 26, after they reach proper position, securely hold the housing and pin and the fixture connected to and supported thereby in rigid position.

In Figures 1 and 2 the device of the invention is shown in position for use on a side-wall, and it will be apparent that by turning the device to bring the bushing 25 at the underside thereof, the device may be secured in a ceiling. In either case a suitable lamp fixture may be supported from the bushing 25.

I claim:

1. In an electrical plug fixture, the combination with a socket and an apertured plug, of a hollow pin rotatable in the plug, an open center housing rotatable on the plug and rigidly connected to the pin, and means for supporting a fixture in connection with the pin.

2. The combination with a socket and an apertured plug having a recess, of a hollow pin rotatable in the plug, a retaining head on said pin, a housing rotatable on the plug having an opening alined with the hollow pin, and a rigid connection between said housing and pin.

3. The combination with an apertured plug, of a hollow pin rotatable therein, a housing on said plug, and an intermediate ring rigidly connecting the pin and housing.

In testimony whereof I have affixed my signature.

FRANK E. KOLAR.