Aug. 8, 1933. H. L. SPENCE 1,921,011

COUPLER YOKE

Filed April 6, 1927

Fig. 1.

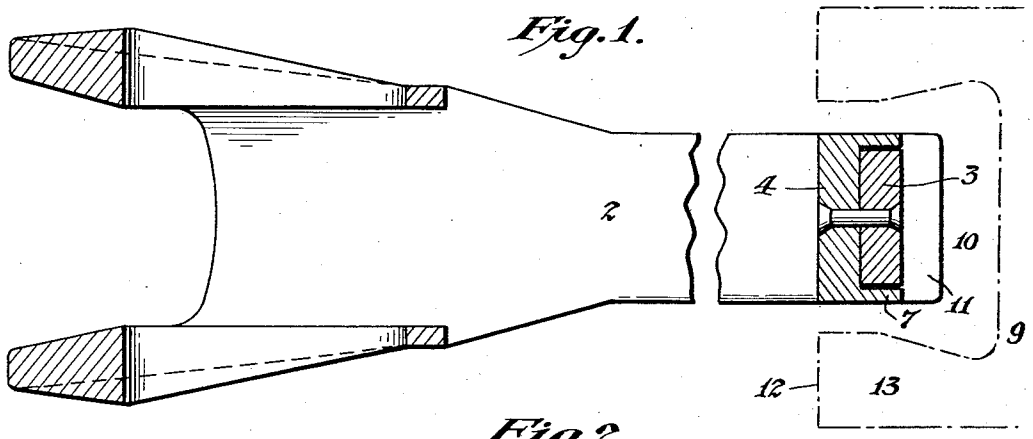

Fig. 2.

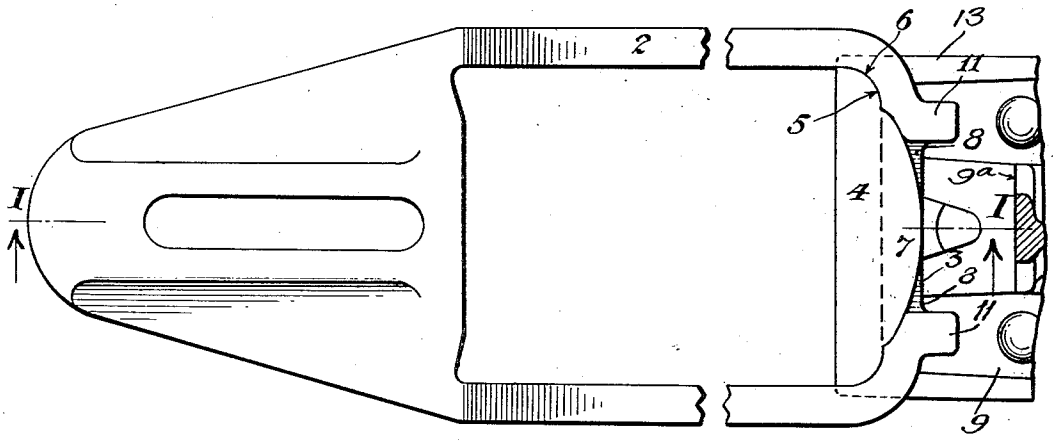

Fig. 3.

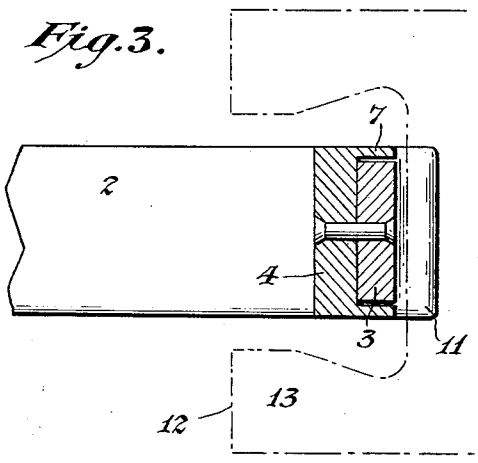

Fig. 4.

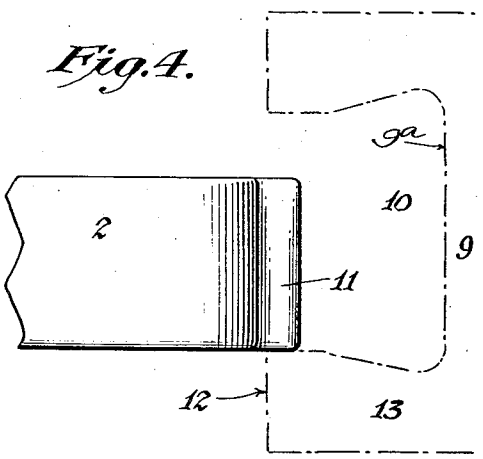

INVENTOR
Hubert L. Spence
BY
Clarence A. Kerr
ATTORNEY

Patented Aug. 8, 1933 1,921,011

UNITED STATES PATENT OFFICE

1,921,011

COUPLER YOKE

Hubert L. Spence, Cleveland, Ohio, assignor to National Malleable and Steel Castings Company, Cleveland, Ohio, a Corporation of Ohio

Application April 6, 1927. Serial No. 181,318

2 Claims. (Cl. 213—67)

The following is a specification, reference being had to the accompanying drawing, in which:—

Fig. 1 is a horizontal section, on lines I—I of Fig. 2, of a yoke embodying my invention; Fig. 2 is a side elevation thereof; Fig. 3 is a horizontal section of the rear end of the yoke of the form which is intended to move rearwardly with the coupler in buffing showing it in its rearward position; and Fig. 4 shows a plan of the rear end of the yoke drawn into a forward angled position.

The American Railway Association has recently approved a center back stop for draft gear attachments which provides when used with the present standard American Railway Association vertical yoke only one-half inch clearance between the rearmost portion of the yoke and the central forward face of the back stop when the parts are in normal position. Such a back stop, however, makes no provision for the movement of a yoke in which during buff the yoke moves rearwardly with the coupler an amount equal to the travel of the draft gear. One of the objects of my invention is to construct an improved yoke which may be used interchangeably with the standard hooded vertical yoke, and which at the same time will have sufficient clearance for a full buffing movement when used with the aforesaid form of back stop. In addition, my improved construction has resulted in a substantial increase in strength over the usual form of standard hooded yoke, so that it may be used advantageously in arrangements in which no rearward travel of the yoke is required. I have also found that substantial uniformity in thickness of the yoke throughout is of definite importance in obtaining perfect castings. My invention also comprises various features which I shall hereinafter describe and claim.

Referring to the drawing, the yoke has horizontal arms 2 which at their rear ends merge into and are joined by a vertical rear portion 3, which preferably is of substantially the same cross-sectional area as, or not of greater cross-sectional area than, the arms 2. A filler block 4, which serves to stiffen and reinforce the rear end of the yoke, is riveted or otherwise secured to the forward side of the vertical rear portion 3. The filler block 4 preferably has a close fit between the yoke arms to resist the tendency of the arms to pinch inwardly and crack, and to this end is formed with curved rear shoulders 5 to conform to the correspondingly curved inner surfaces 6 of the yoke, which are located at the juncture between its arms 2 and its rear portion 3. The reinforcing effect of the filler block 4 is increased by the rearwardly extending flanges 7, which stiffen the filler block and hold it in correct relation with the vertical rear portion of the yoke. The flanges 7 also have their rear edges curved so that the resistance to bending will be greatest at the center of the filler where the bending moment reaches its maximum. If desired, the vertical portion 3 of the yoke may be recessed at 8, as is shown in Fig. 2, to accommodate the flanges 7.

For the purpose of retaining the yoke in its pocket 10 in the center back stop 9, the yoke has horizontal rear extensions 11, which are preferably spaced sufficiently far apart to prevent engagement with the central portion of the back stop 9 when under buff, as is shown in Fig. 2. The back stop 9 has, as is shown in Fig. 2, a narrowed central portion 9^a and forwardly extending side portions 13 which have bearing faces 12 of a height to provide full bearings for the rear end of the draft gear or rear follower (not shown). The extensions also prevent the yoke, when angling under draft, from swinging in front of the bearing faces 12 of the side portions 13 of the back stop 9.

Yokes constructed in accordance with my invention have a much higher capacity than the standard hooded vertical yokes, in which failures are apt to occur, particularly at the juncture of the arms with the vertical rear portion.

The terms and expressions which I have employed are used as terms of description and not of limitation, and I have no intention, in the use of such terms and expressions, of excluding any mechanical equivalents of the features shown and described, or portions thereof, but recognize that various structural modifications are possible within the scope of the invention claimed.

What I claim is:

1. The combination with a coupler yoke, capable of being angled laterally, of a central back stop and rear side buffing stops, the yoke having arms and a rear vertical portion, and rear extensions from the vertical portion to prevent the rear end of the yoke when angled laterally under draft from swinging in front of the rear side buffing stops, said rear extensions also being arranged to avoid engagement of the yoke with the central back stop.

2. The combination with a coupler yoke capable of being angled laterally, of a central back stop having a narrowed central portion and forwardly extending side buffing portions, the yoke having arms and a rear vertical portion, and rear extensions from the vertical portion, said rear extensions being spaced apart sufficiently to avoid interference with the narrowed central portion of the back stop during buffing and being adapted to prevent the rear end of the yoke when angled laterally under draft from swinging in front of the side buffing portions of the back stop.

HUBERT L. SPENCE.