US010472198B2

(12) **United States Patent**
Komiyama et al.

(10) **Patent No.: US 10,472,198 B2**
(45) **Date of Patent: Nov. 12, 2019**

(54) **SHEET PROCESSING APPARATUS AND IMAGE FORMING SYSTEM HAVING THE SAME**

(71) Applicants: **Daiki Komiyama**, Yamanashi-ken (JP); **Takuya Katayama**, Yamanashi-ken (JP)

(72) Inventors: **Daiki Komiyama**, Yamanashi-ken (JP); **Takuya Katayama**, Yamanashi-ken (JP)

(73) Assignee: **CANON FINETECH NISCA INC.**, Misato-Shi, Saitama (JP)

(*) Notice: Subject to any disclaimer, the term of this patent is extended or adjusted under 35 U.S.C. 154(b) by 0 days.

(21) Appl. No.: **16/054,347**

(22) Filed: **Aug. 3, 2018**

(65) **Prior Publication Data**

US 2018/0339877 A1 Nov. 29, 2018

Related U.S. Application Data

(60) Continuation of application No. 15/398,336, filed on Jan. 4, 2017, now Pat. No. 10,071,876, which is a (Continued)

(30) **Foreign Application Priority Data**

Dec. 16, 2013 (JP) 2013-259469
Dec. 17, 2013 (JP) 2013-260097
Dec. 17, 2013 (JP) 2013-260098

(51) **Int. Cl.**
B65H 37/04 (2006.01)
B42B 5/08 (2006.01)
(Continued)

(52) **U.S. Cl.**
CPC ***B65H 37/04*** (2013.01); ***B26D 5/32*** (2013.01); ***B26F 1/02*** (2013.01); ***B42B 4/00*** (2013.01);
(Continued)

(58) **Field of Classification Search**
CPC B42B 5/08; G03G 2215/00848; G03G 2215/00936; G03G 15/6544;
(Continued)

(56) **References Cited**

U.S. PATENT DOCUMENTS

8,540,228 B2 9/2013 Shiraishi
9,567,183 B2 * 2/2017 Komiyama B42B 5/08
(Continued)

FOREIGN PATENT DOCUMENTS

JP 2012-025499 A 2/2012
JP 2013-126911 A 6/2013
(Continued)

OTHER PUBLICATIONS

Japan Patent Office, "Office Action for Japanese Patent Publication No. 2018-096725," dated Mar. 20, 2019.

Primary Examiner — Leslie A Nicholson, III
(74) *Attorney, Agent, or Firm* — Manabu Kanesaka

(57) **ABSTRACT**

A sheet processing apparatus includes a conveying portion, a stack portion on which sheets conveyed by the conveying portion are stacked, a first regulating portion regulating a position of a sheet bundle stacked on the stack portion in a crossing direction, a second regulating portion regulating a position of a sheet bundle on the stack portion in a conveying direction, a first binding device moved in the crossing direction and binding a corner portion of a sheet bundle by a staple, a second binding device binding a corner portion of a sheet bundle without a staple, and a controller positioning the first binding device and binding a corner portion of a sheet bundle by the first binding device. The controller also moves the second binding device and binds a corner portion of a sheet bundle without a staple by the second binding device.

9 Claims, 25 Drawing Sheets

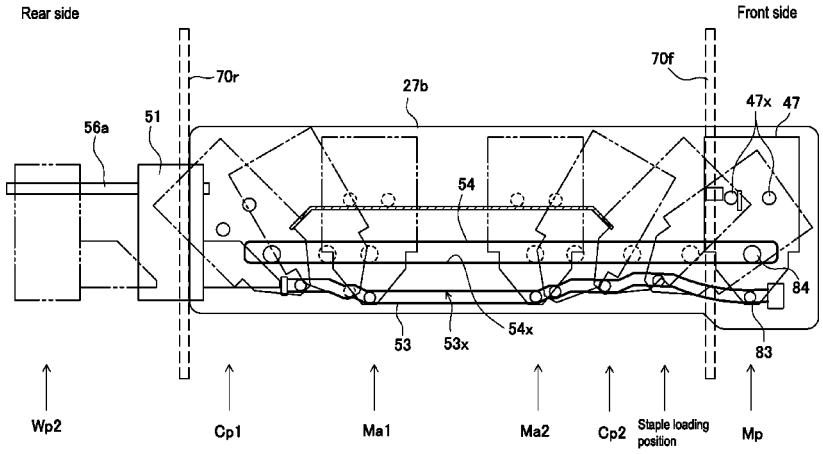

Related U.S. Application Data

division of application No. 14/570,692, filed on Dec. 15, 2015, now Pat. No. 9,567,183.

(51) **Int. Cl.**

B65H 31/34	(2006.01)
B65H 29/12	(2006.01)
B65H 29/14	(2006.01)
B65H 31/10	(2006.01)
B65H 31/24	(2006.01)
B65H 31/30	(2006.01)
B65H 33/08	(2006.01)
G03G 15/00	(2006.01)
B65H 5/08	(2006.01)
B26D 5/32	(2006.01)
B26F 1/02	(2006.01)
B42B 4/00	(2006.01)
B42B 5/00	(2006.01)
B42C 1/12	(2006.01)
B60B 33/02	(2006.01)

(52) **U.S. Cl.**

CPC ***B42B 5/00*** (2013.01); ***B42B 5/08*** (2013.01); ***B42C 1/12*** (2013.01); ***B65H 5/08*** (2013.01); ***B65H 29/125*** (2013.01); ***B65H 29/14*** (2013.01); ***B65H 31/10*** (2013.01); ***B65H 31/24*** (2013.01); ***B65H 31/3027*** (2013.01); ***B65H 31/3081*** (2013.01); ***B65H 31/34*** (2013.01); ***B65H 33/08*** (2013.01); ***G03G 15/6544*** (2013.01); *B60B 33/025* (2013.01); *B65H 2301/4213* (2013.01); *B65H 2301/43828* (2013.01); *B65H 2402/10* (2013.01); *B65H 2402/441* (2013.01); *B65H 2402/442* (2013.01); *B65H 2404/1424* (2013.01); *B65H 2407/21* (2013.01); *B65H 2601/11* (2013.01); *B65H 2801/27* (2013.01); *G03G 2215/00848* (2013.01); *G03G 2215/00936* (2013.01)

(58) **Field of Classification Search**

CPC B60B 33/025; B65H 37/04; B65H 2301/43828; B65H 2301/4213; B65H 2402/10; B65H 2402/441; B65H 2402/442; B65H 2404/1424; B65H 2407/21; B65H 2801/27; B65H 33/08; B65H 31/34; B65H 31/3081; B65H 31/3027; B65H 31/24; B65H 31/10; B65H 29/14; B65H 29/125

USPC 270/58.08, 58.13, 58.19, 58.28

See application file for complete search history.

(56) **References Cited**

U.S. PATENT DOCUMENTS

9,725,276	B2 *	8/2017	Takahashi	B65H 31/26
9,731,928	B2 *	8/2017	Miyahara	G03G 15/6541
2012/0018944	A1	1/2012	Shiraishi	
2013/0214470	A1	8/2013	Yokomizo	
2015/0166295	A1 *	6/2015	Kanemaru	B65H 31/02 270/58.08
2015/0344257	A1 *	12/2015	Tachibana	B65H 37/04 270/1.01
2016/0159605	A1 *	6/2016	Miyahara	G03G 15/6544 270/1.01
2016/0194173	A1 *	7/2016	Okada	B65H 37/04 270/58.09
2016/0340144	A1 *	11/2016	Sakano	B65H 37/04
2016/0360053	A1 *	12/2016	Suzuki	B65H 33/00
2017/0174465	A1 *	6/2017	Morinaga	B31F 5/02
2017/0217239	A1 *	8/2017	Suzuki	B42C 1/12
2017/0253456	A1	9/2017	Yokomizo	
2017/0283208	A1 *	10/2017	Matsuki	B65H 37/04
2018/0259895	A1 *	9/2018	Shibasaki	G03G 15/6541

FOREIGN PATENT DOCUMENTS

JP	2013-170067	A	9/2013	
JP	2013-230940	A	11/2013	
JP	2016204071	A *	12/2016	
JP	2016216227	A *	12/2016	B65H 37/04
JP	2017100402	A *	6/2017	B31F 5/02
JP	2017136732	A *	8/2017	B42C 1/12

* cited by examiner

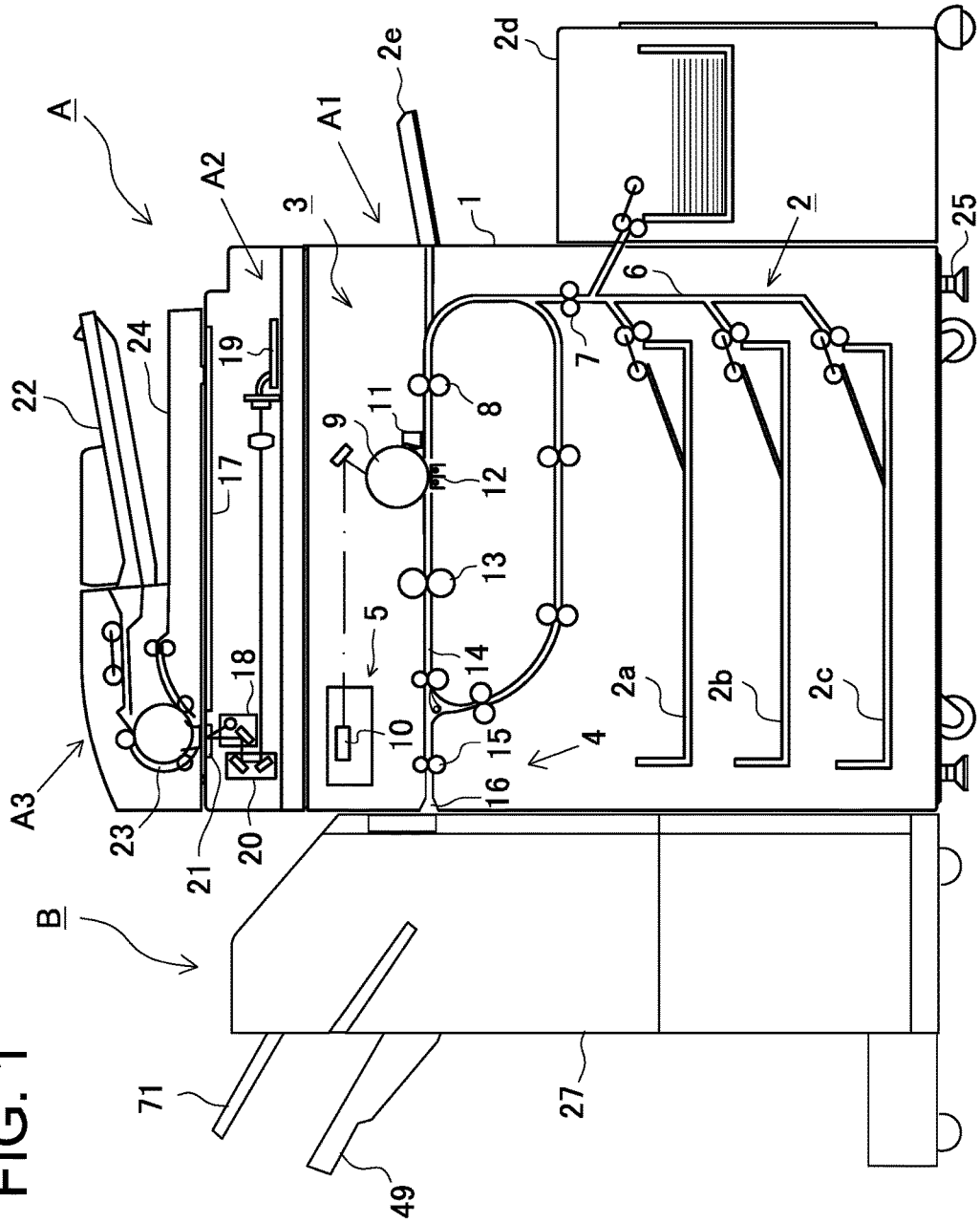
A
A1
A2
A3
B
1
2
2a
2b
2c
2d
2e
3
4
5
6
7
8
9
10
11
12
13
14
15
16
17
18
19
20
21
22
23
24
25
27
49
71

FIG. 1

FIG. 2

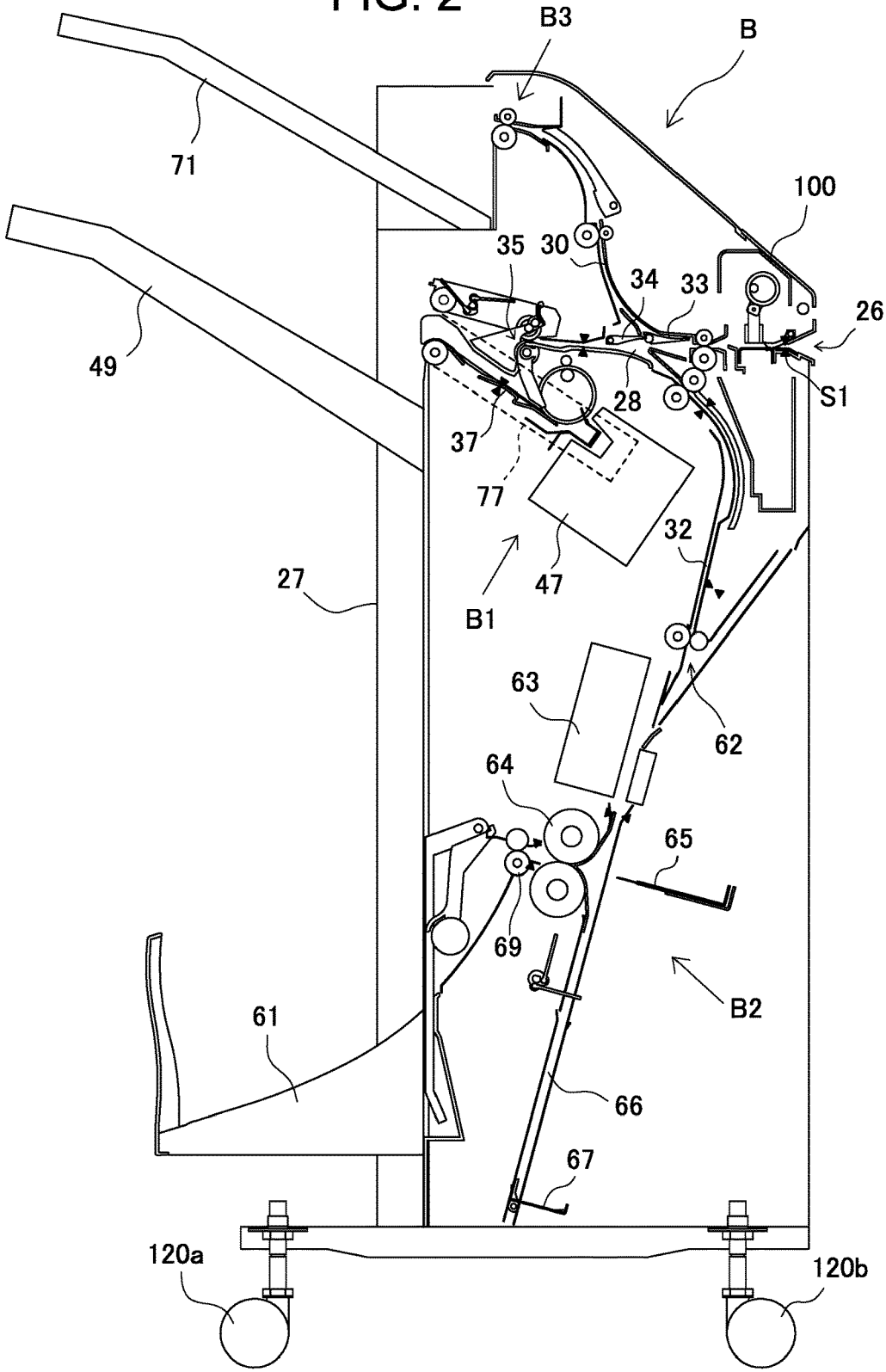
B3
B
71
100
35
30
34
33
26
49
S1
28
37
77
32
27
47
B1
63
62
64
65
69
B2
61
66
67
120a
120b

FIG. 3

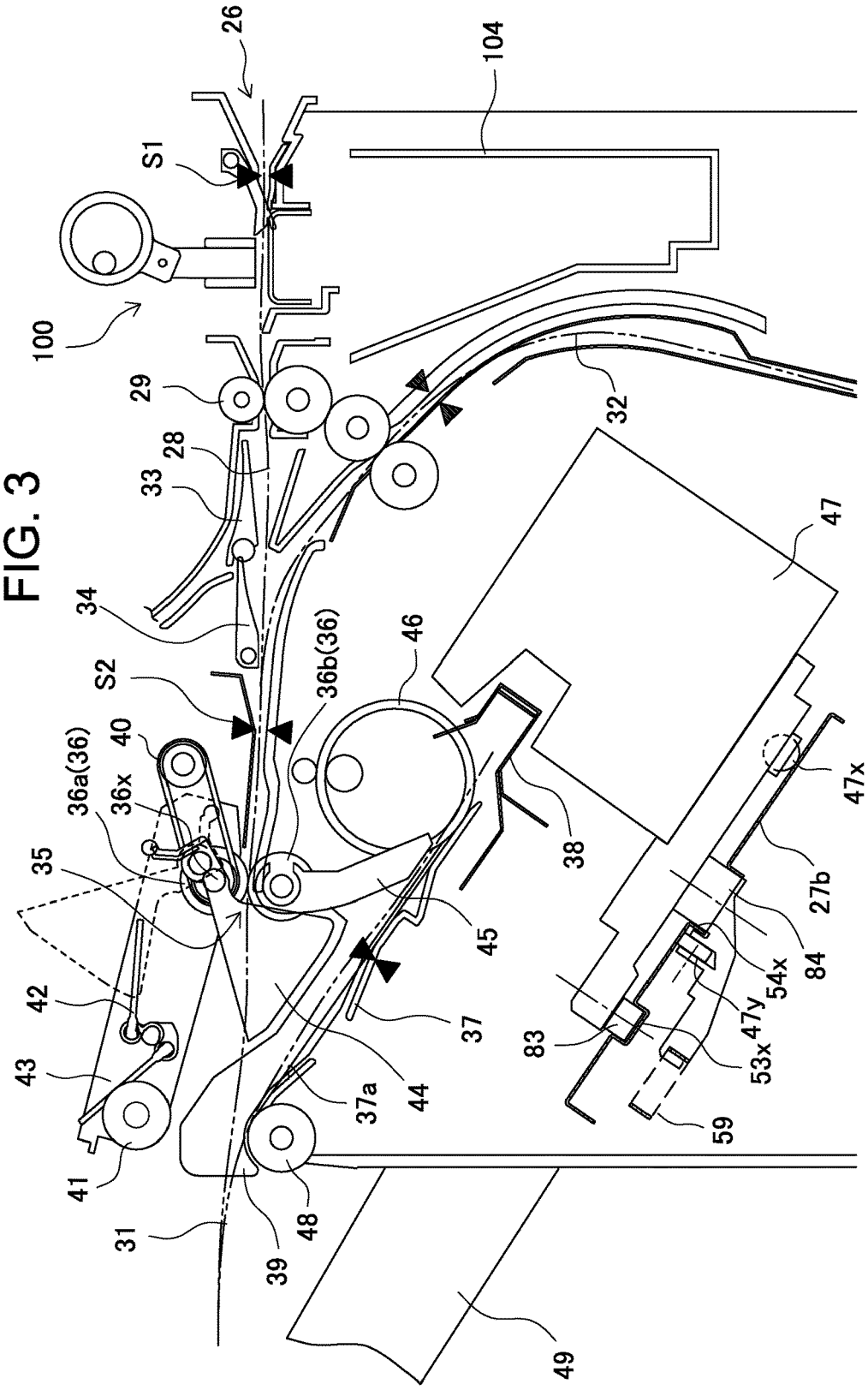
26
104
S1
100
29
28
33
34
S2
36b(36)
46
40
36a(36)
36x
35
42
43
41
31
39
48
37a
44
37
45
38
32
47
47x
27b
84
54x
47y
53x
83
59
49

FIG. 4

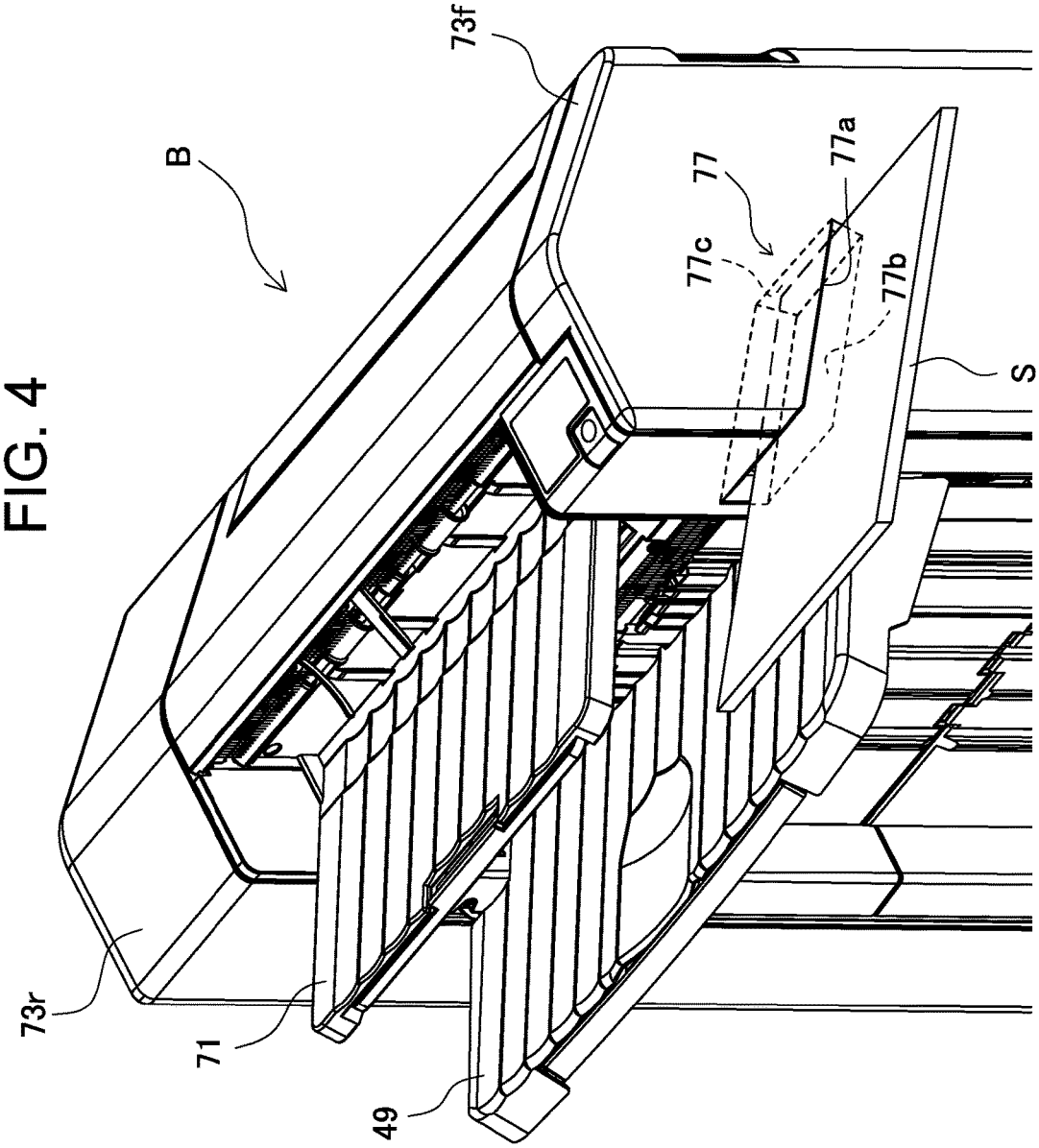

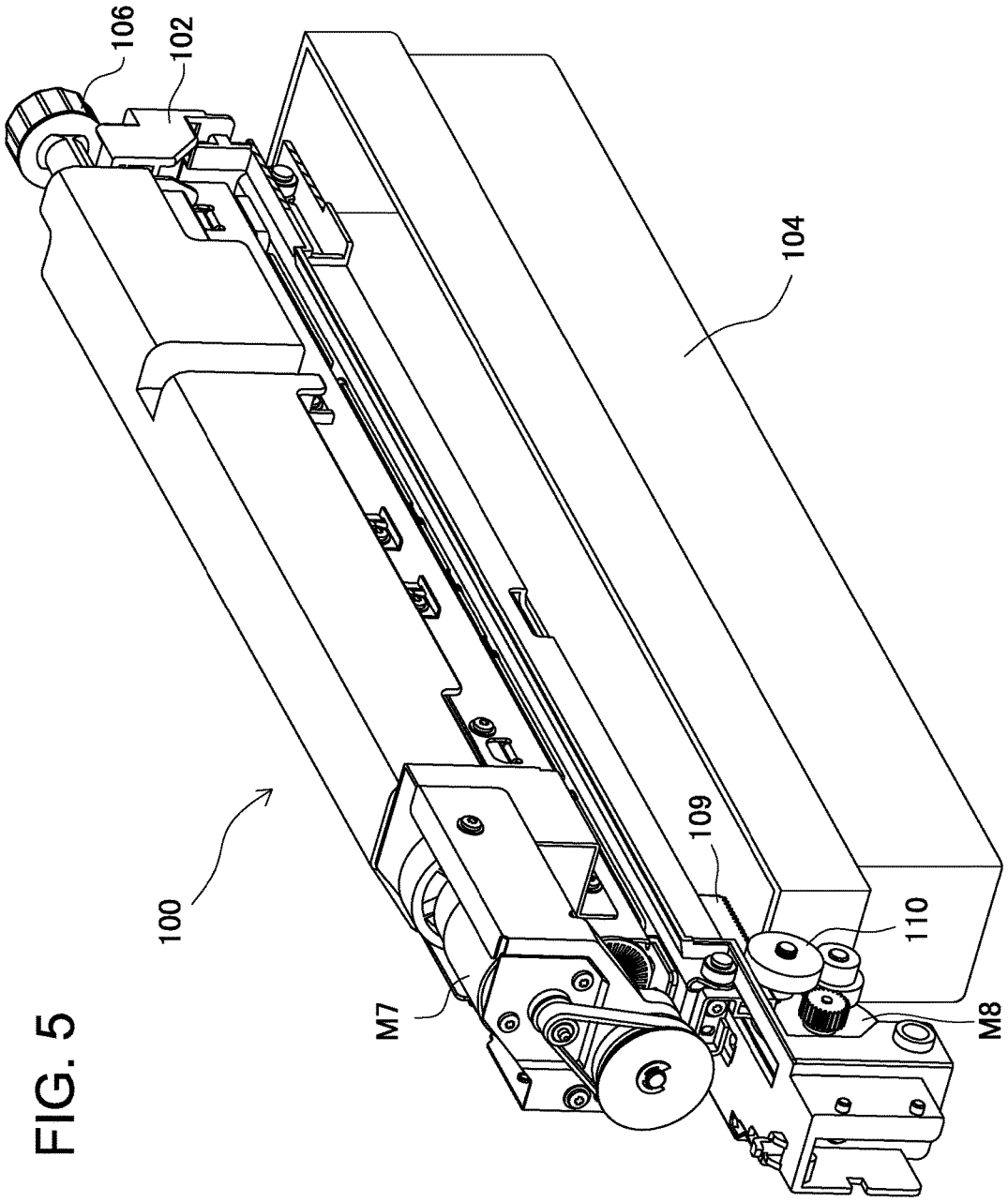

FIG. 5

FIG. 6

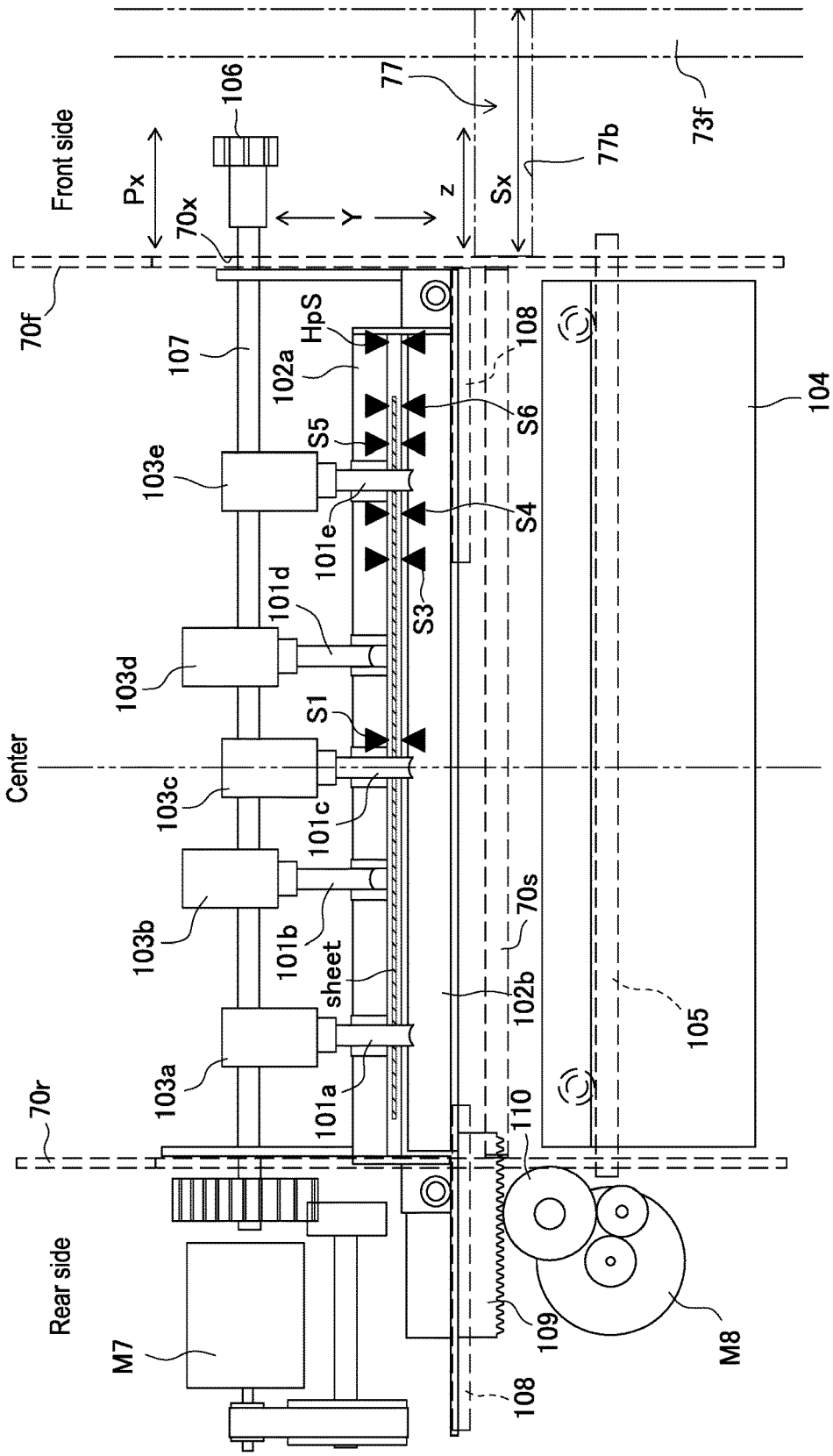
Front side
Rear side
Center
Px
Y
z
Sx
70x
70f
70r
106
77
77b
73f
107
HpS
102a
108
S5
S6
S4
S3
S1
103e
101e
101d
103d
103c
101c
103b
101b
sheet
103a
101a
70s
102b
110
109
M7
M8
104
105

FIG. 7

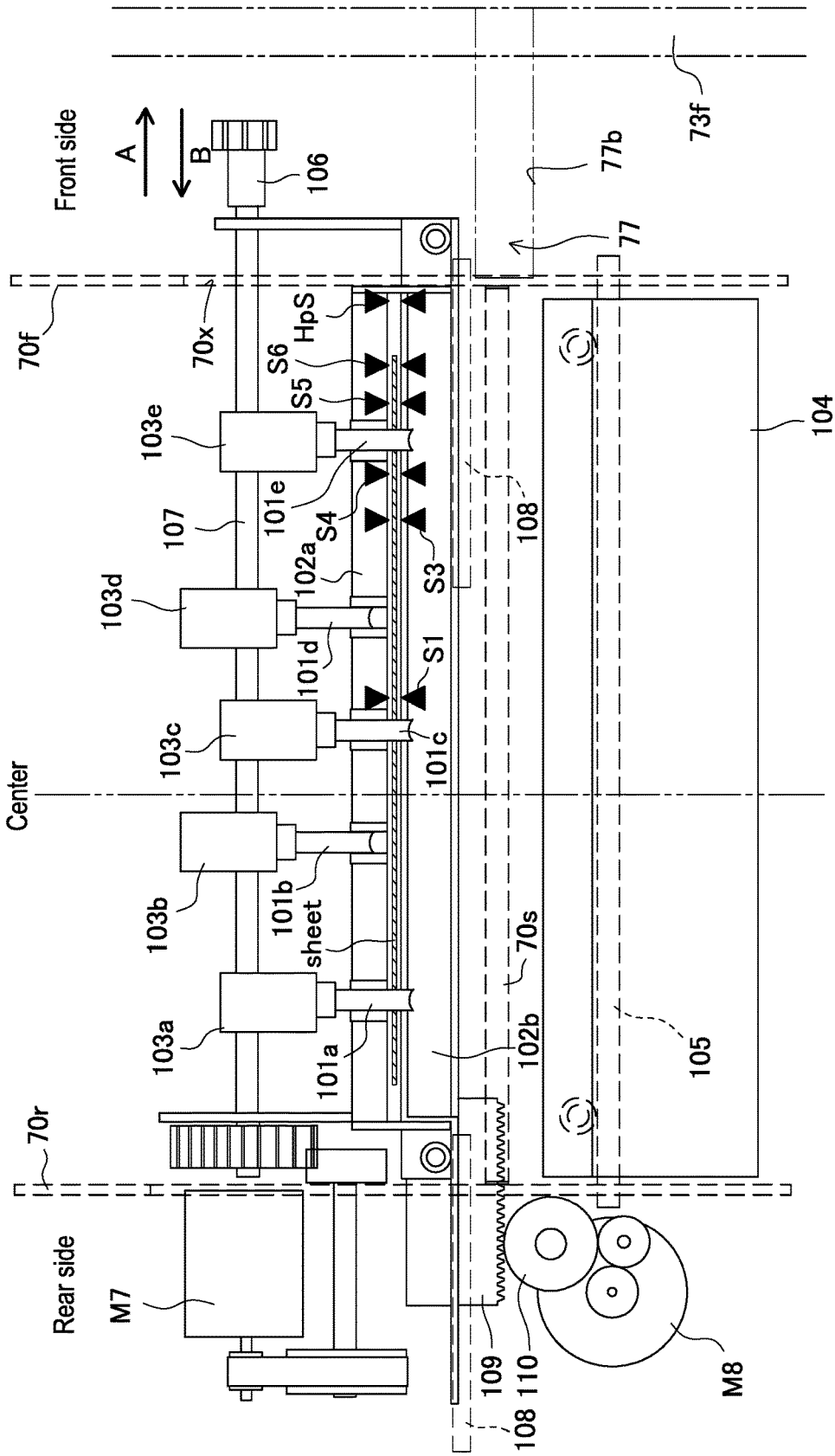
Front side
A
B
106
70f
70x
HpS
S6
S5
103e
107
101e
S4
102a
103d
101d
S1
103c
101c
Center
103b
101b
sheet
103a
101a
70r
Rear side
M7
109
108 110
M8
102b
70s
105
108
S3
104
77b
77
73f

FIG. 8

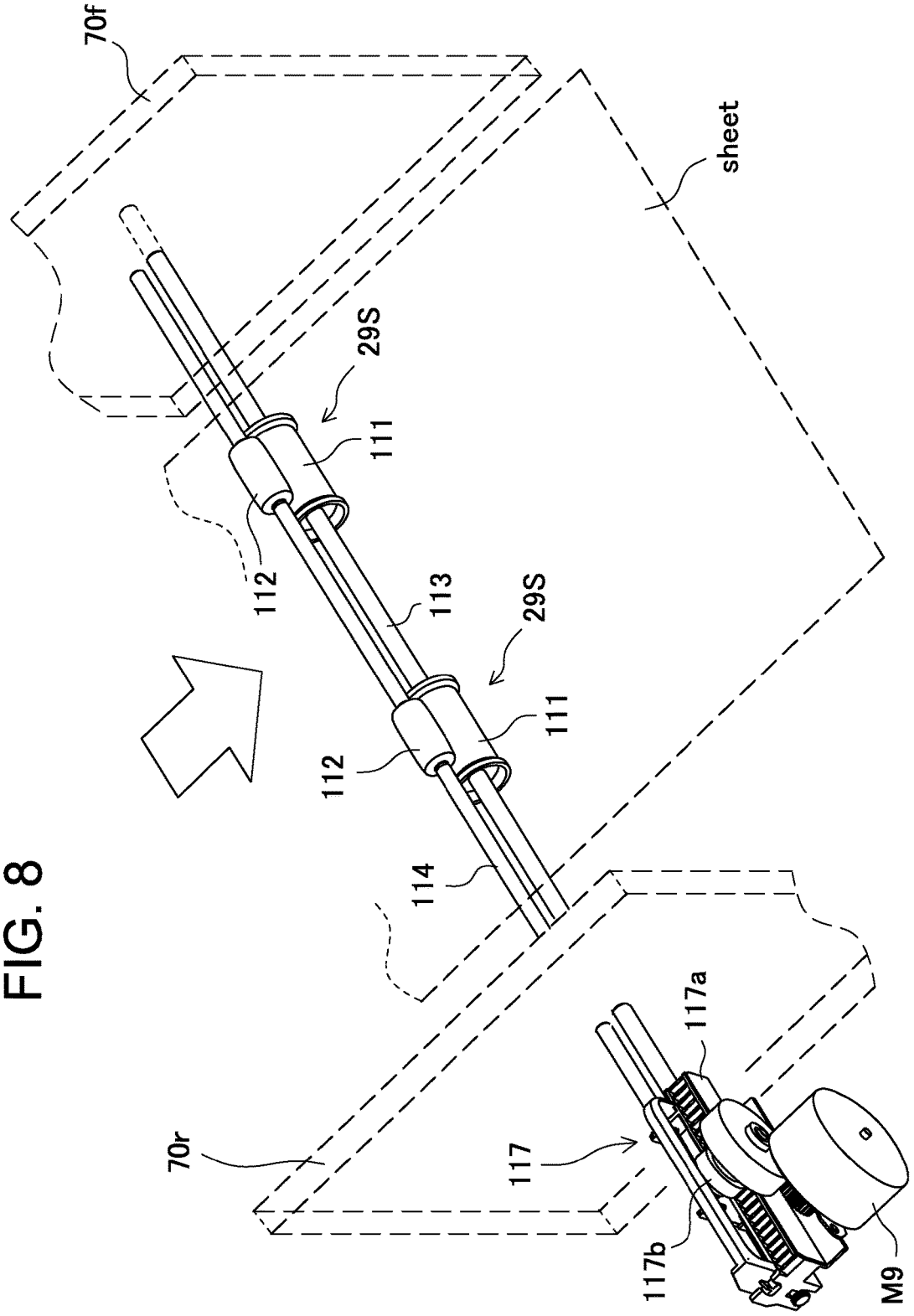

FIG. 9

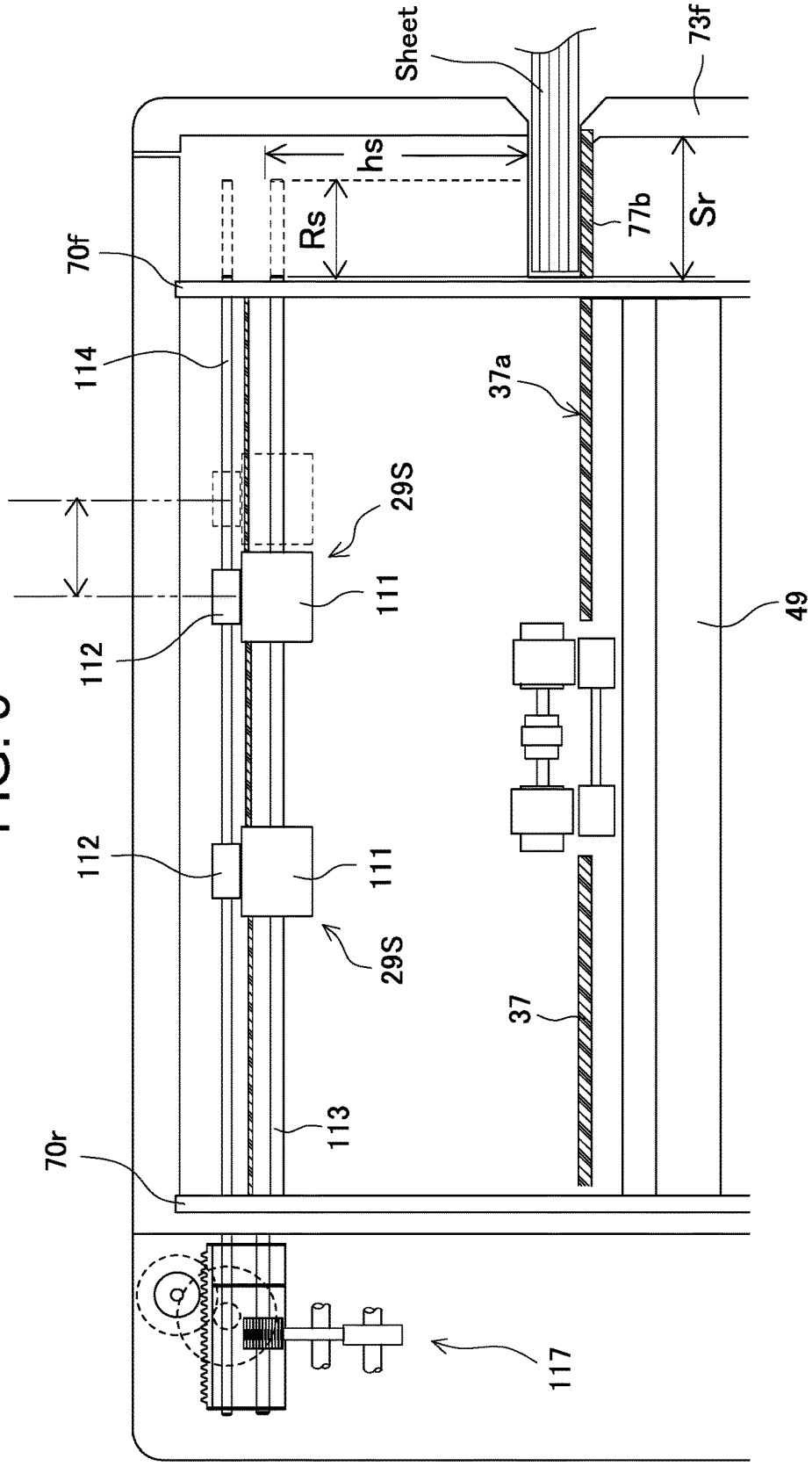
Sheet
73f
hs
Rs
77b
Sr
70f
114
37a
29S
111
112
49
112
111
29S
37
113
70r
117

FIG. 10

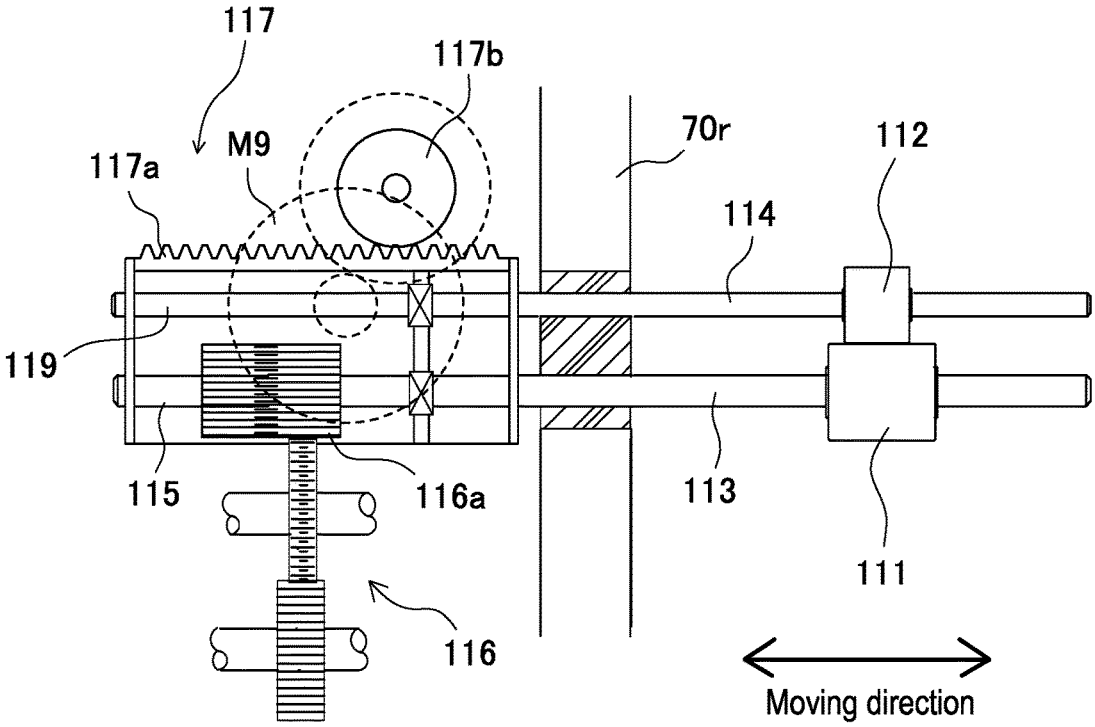
117
117b
70r
112
M9
117a
114
119
115
116a
113
111
116
Moving direction

FIG. 11

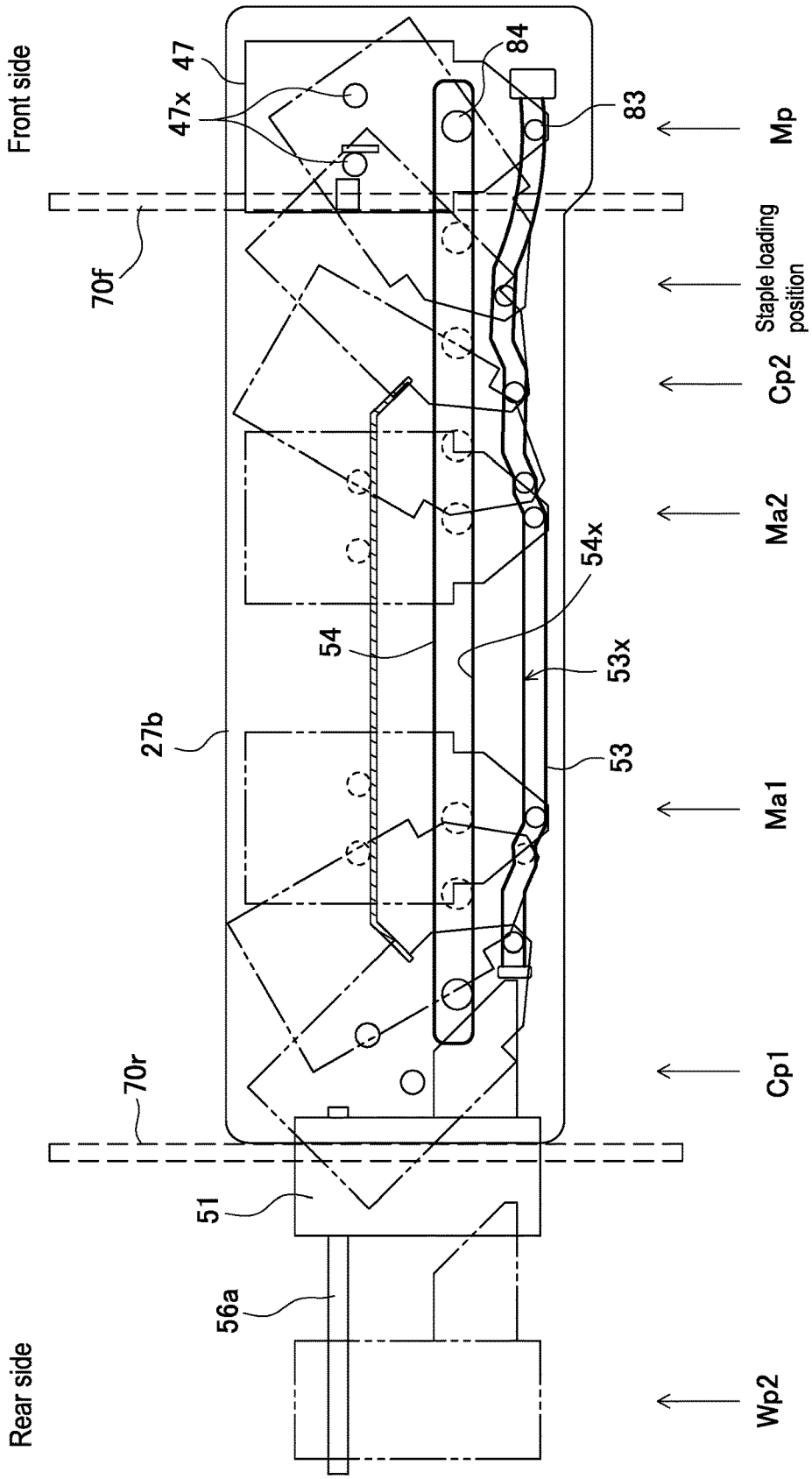
Front side
47
47x
84
83
Mp
70f
Staple loading position
Cp2
Ma2
54x
54
53x
27b
53
Ma1
Cp1
70r
51
56a
Rear side
Wp2

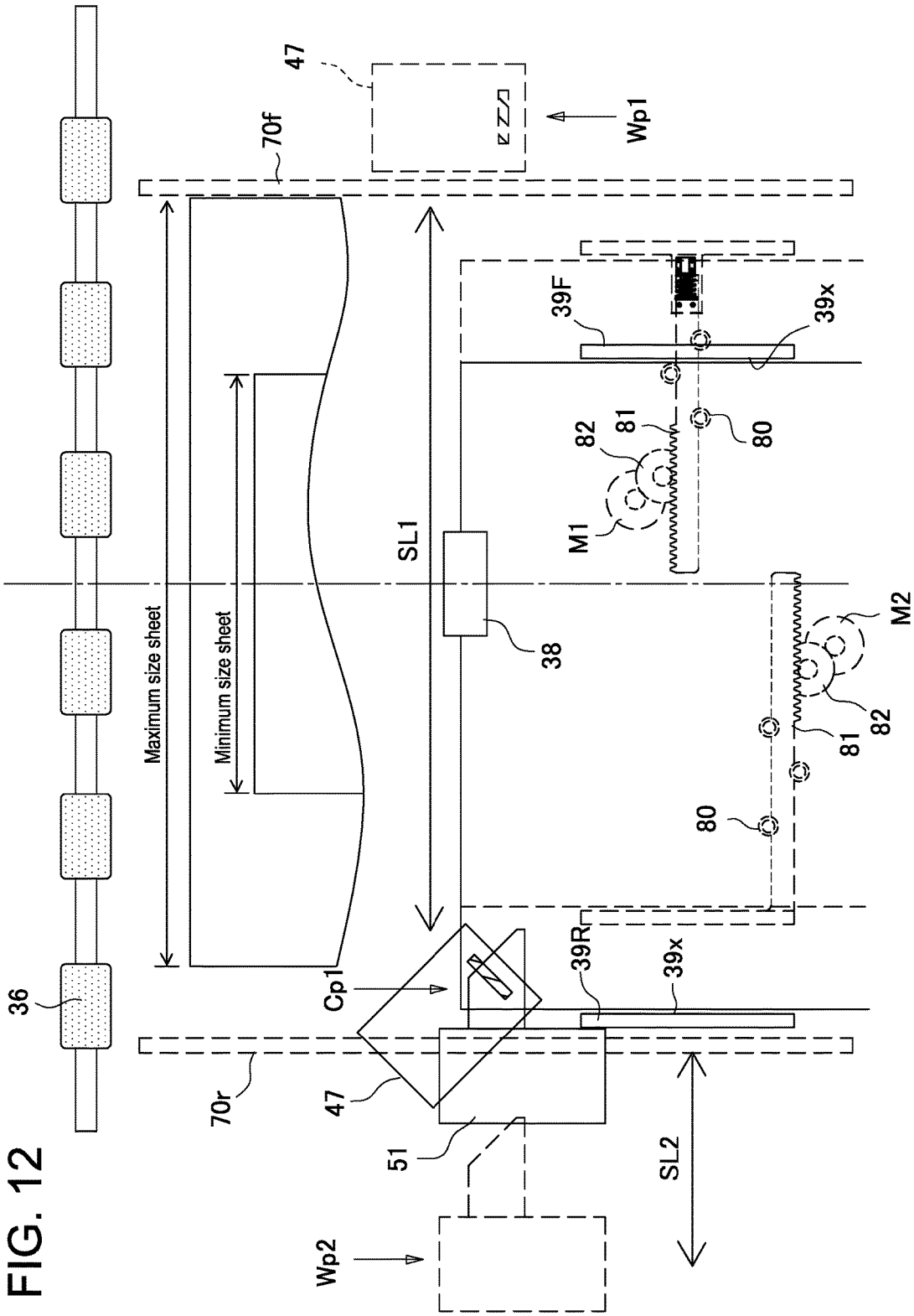
36
Maximum size sheet
Minimum size sheet
70f
70r
47
Wp1
Wp2
Cp1
51
SL1
SL2
38
39F
39x
39R
39x
80
81
82
M1
M2
80
81
82

FIG. 12

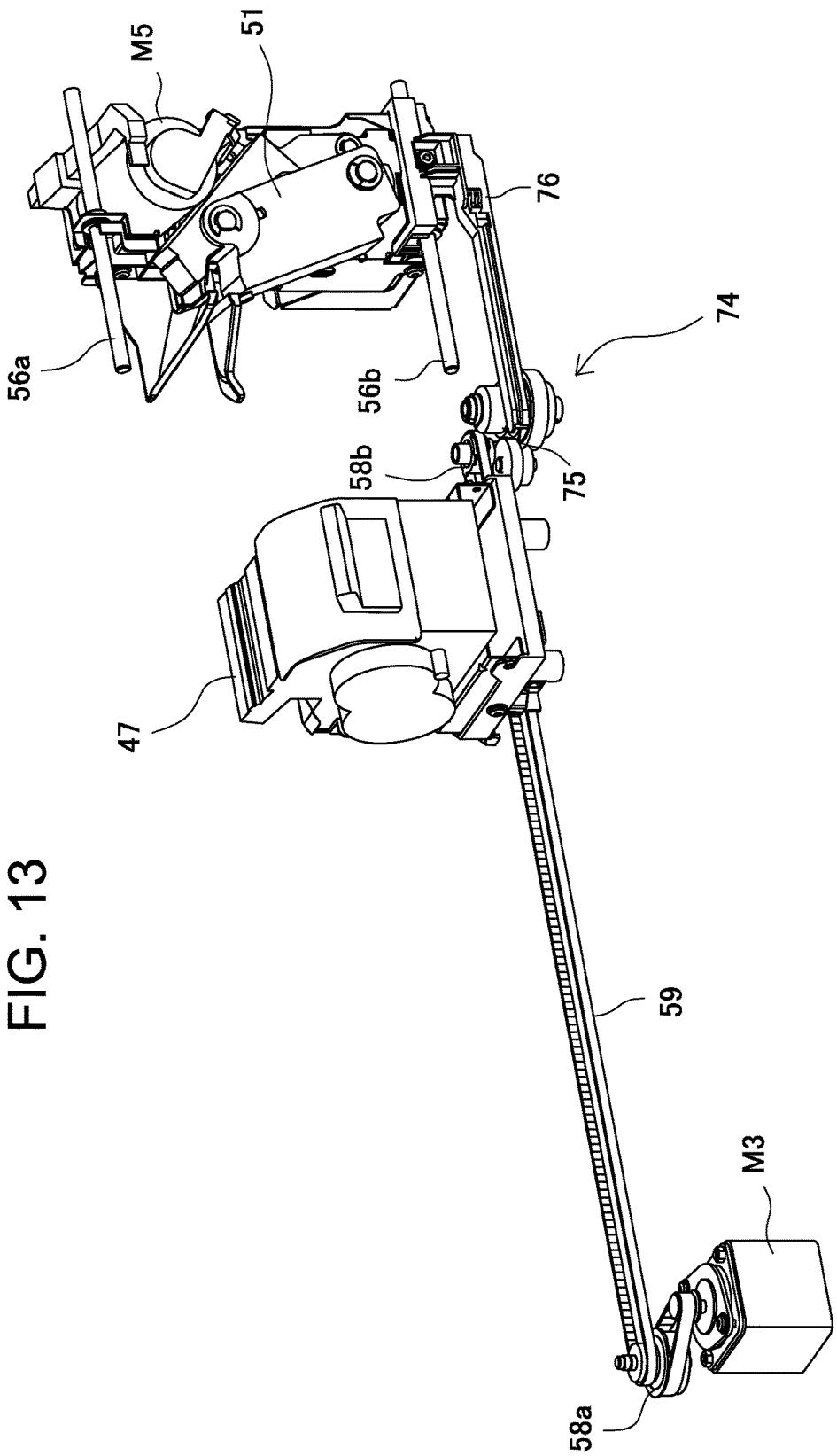

FIG. 13

FIG. 14

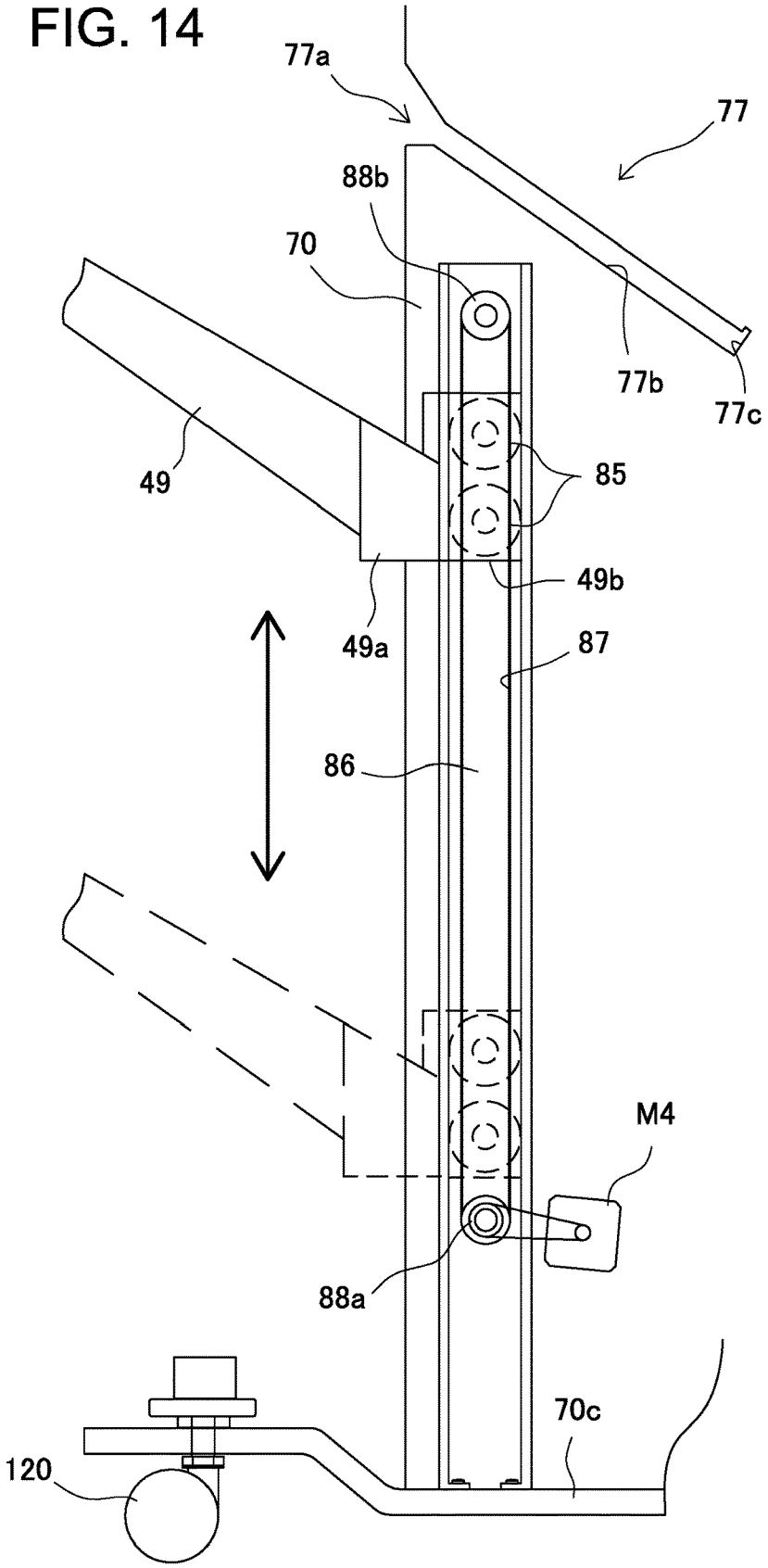

FIG. 15

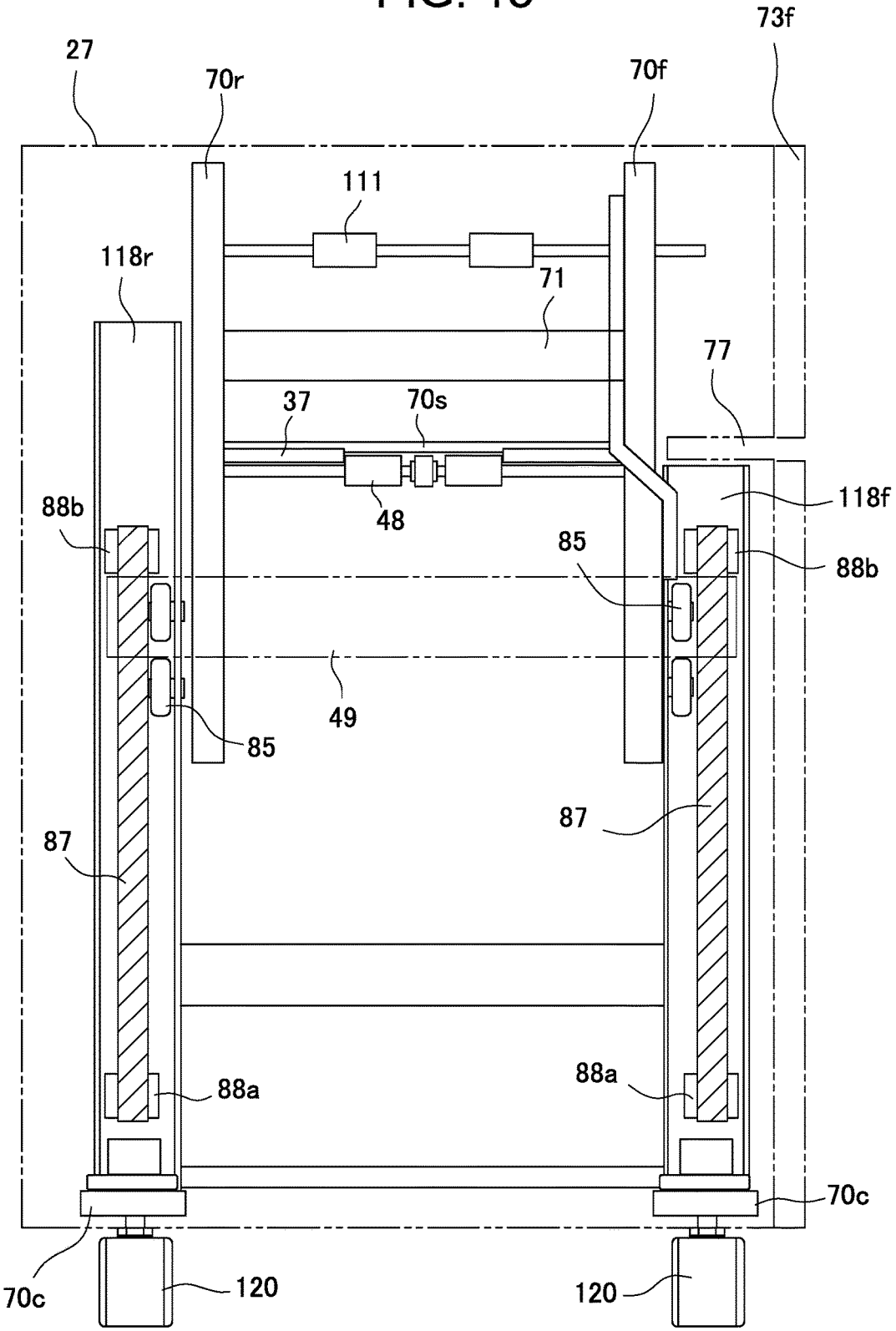
27
70r
70f
73f
111
118r
71
77
37
70s
48
118f
88b
85
88b
49
85
87
87
88a
88a
70c
70c
120
120

FIG. 16

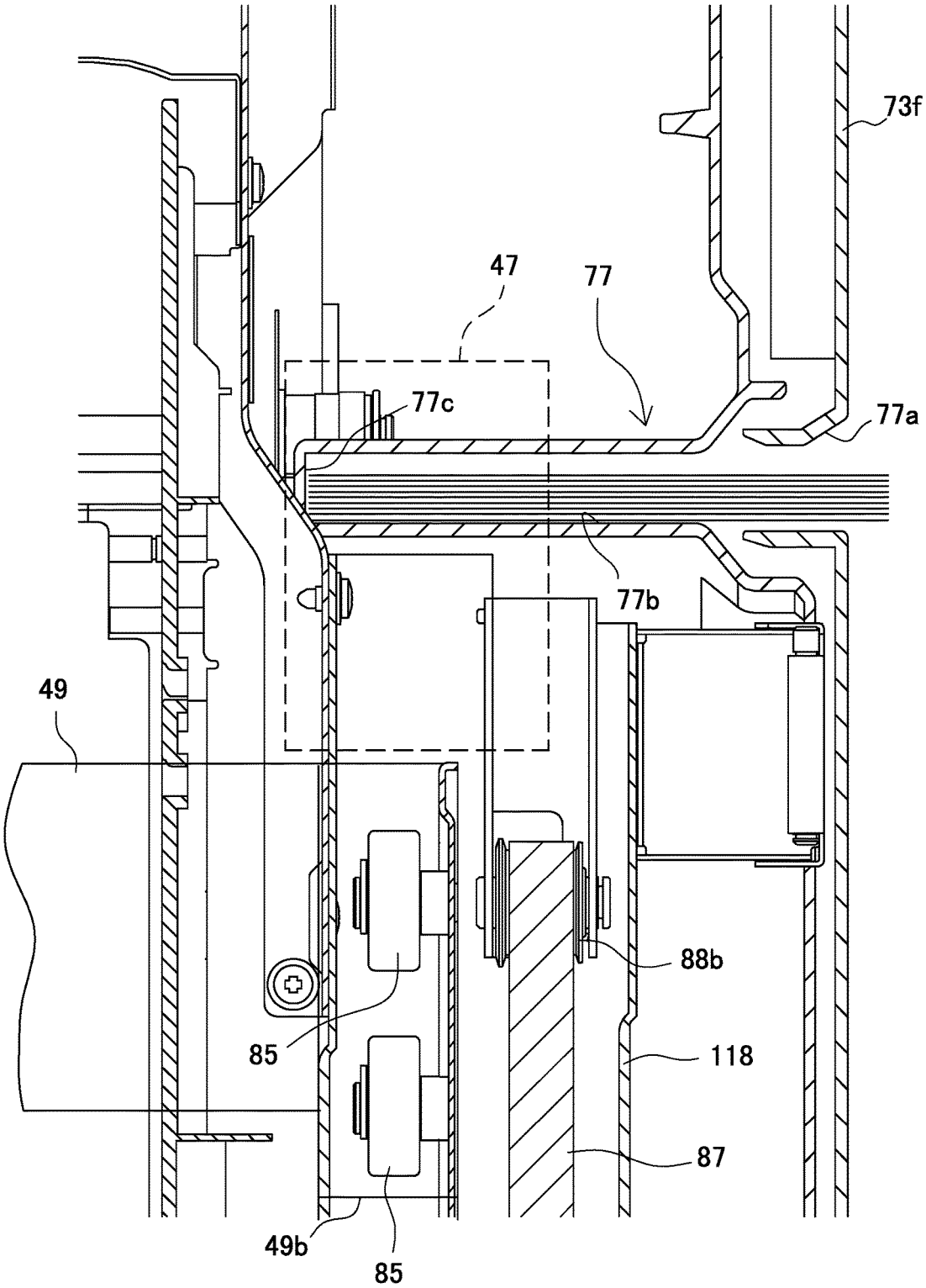

FIG. 17

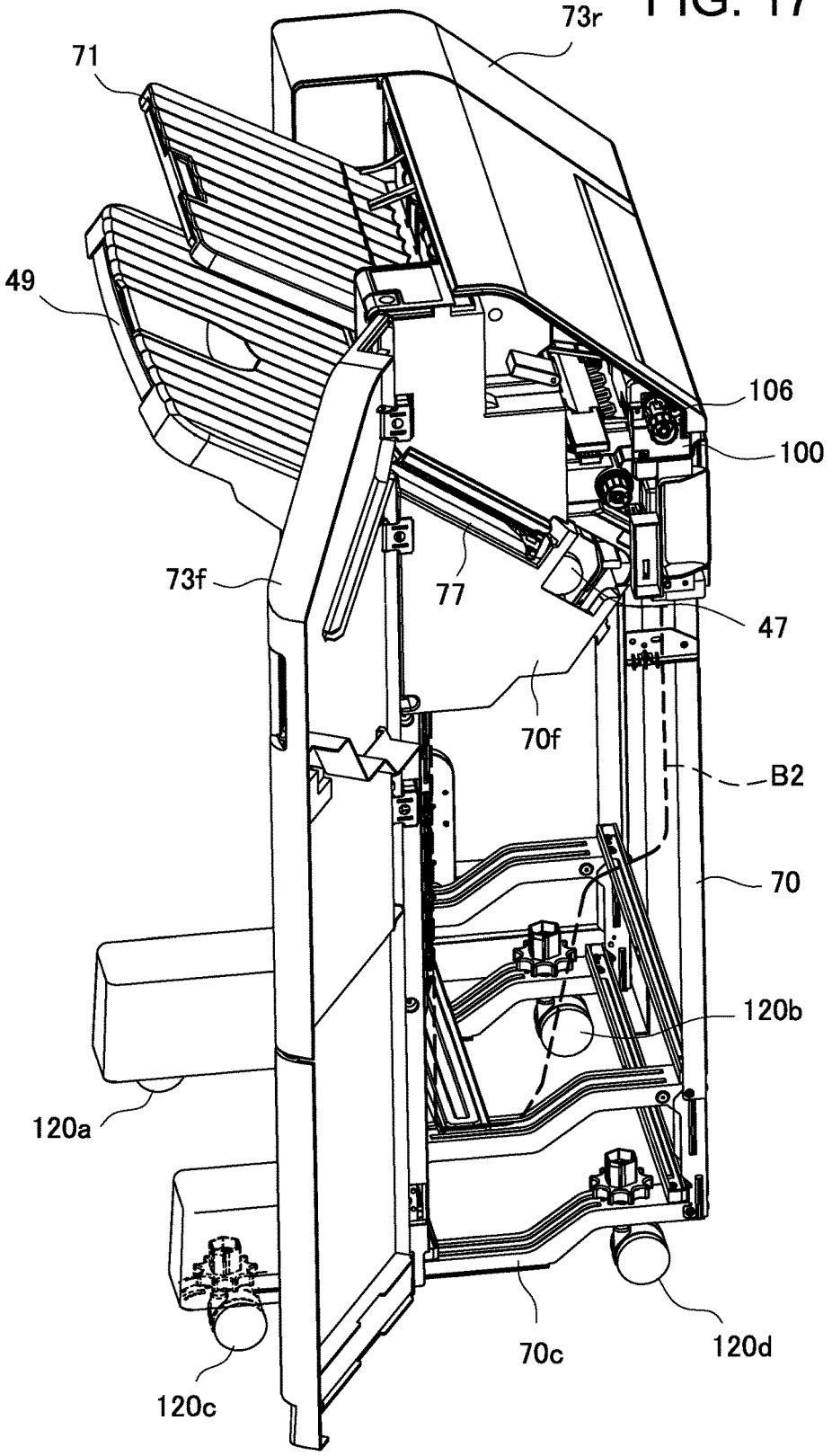

FIG. 18B

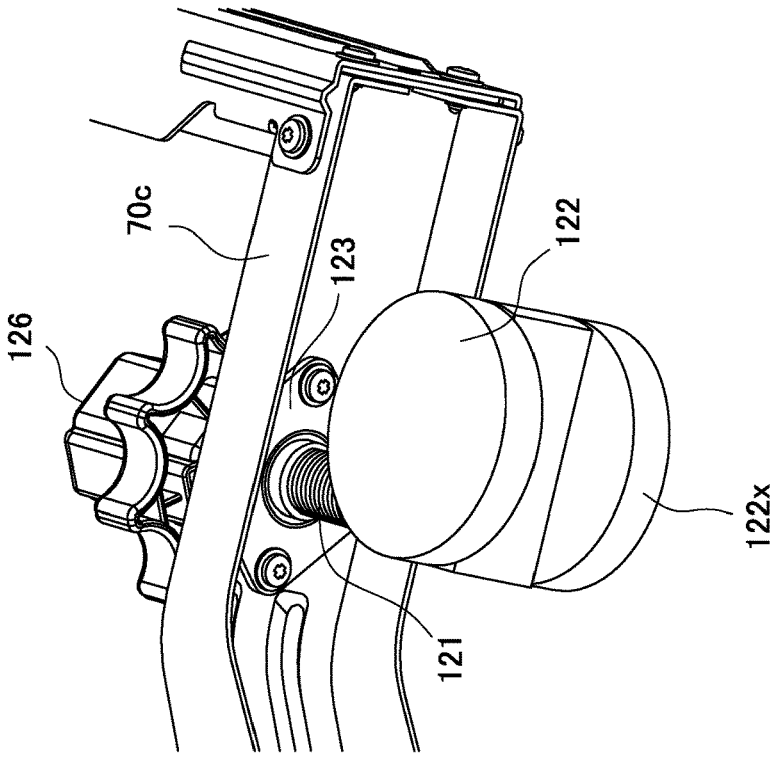

FIG. 18A

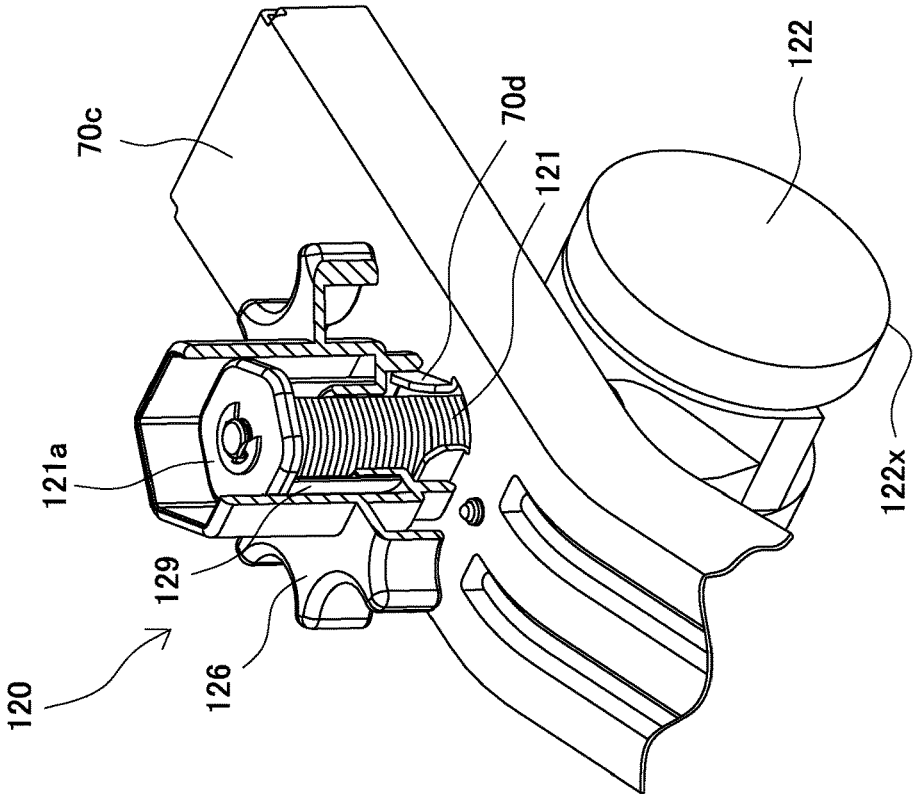

FIG. 19B

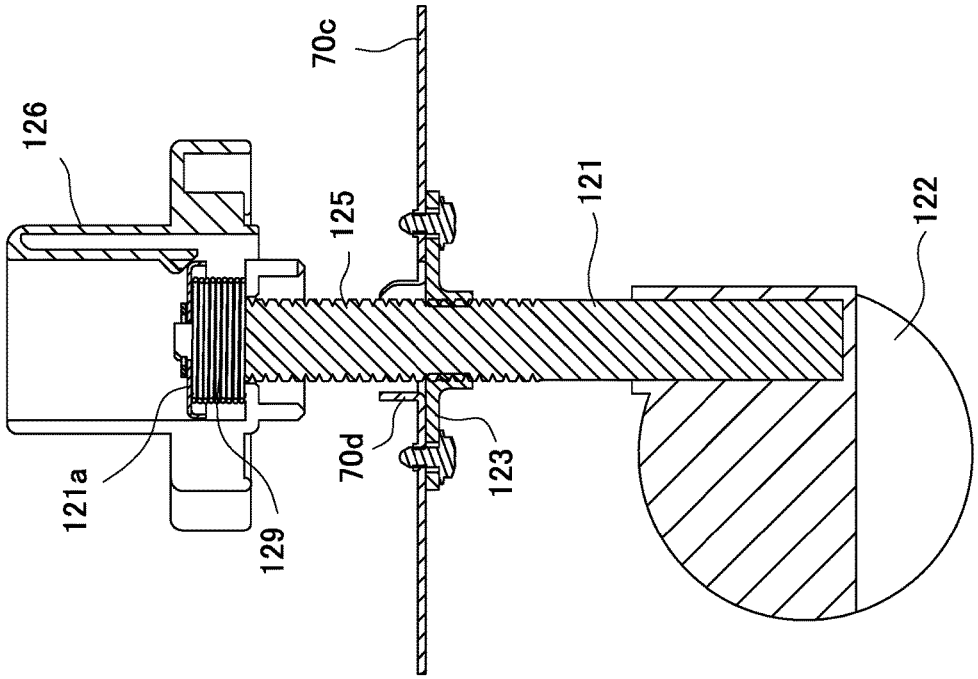

FIG. 19A

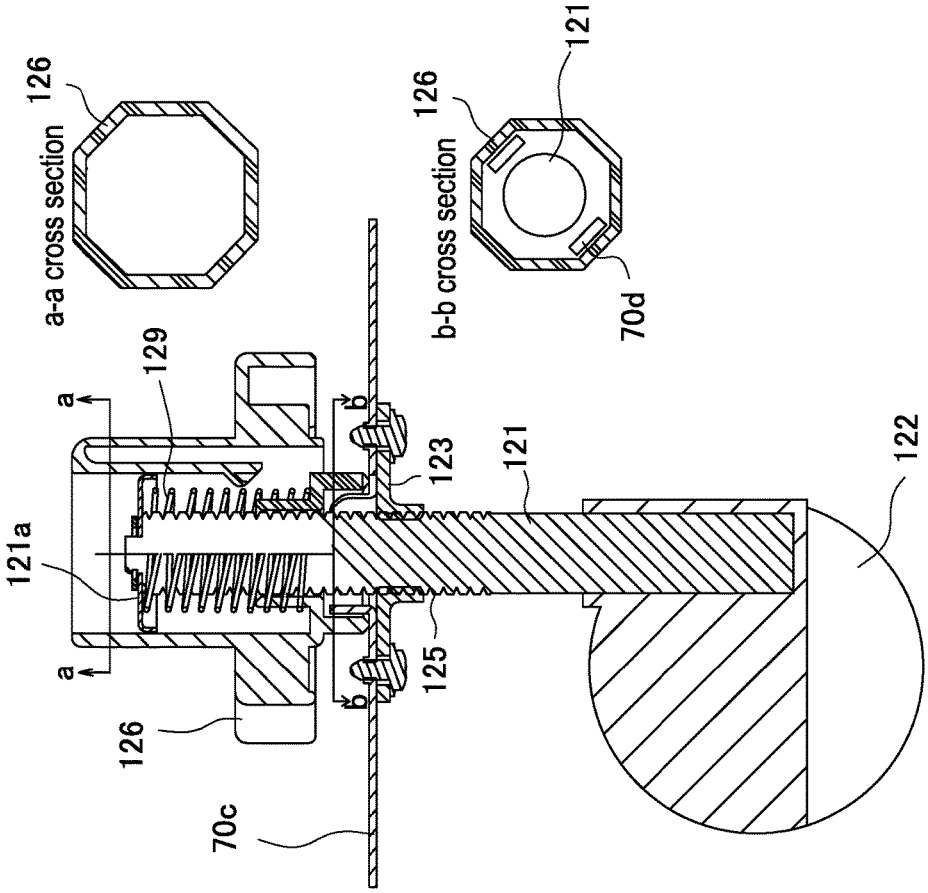

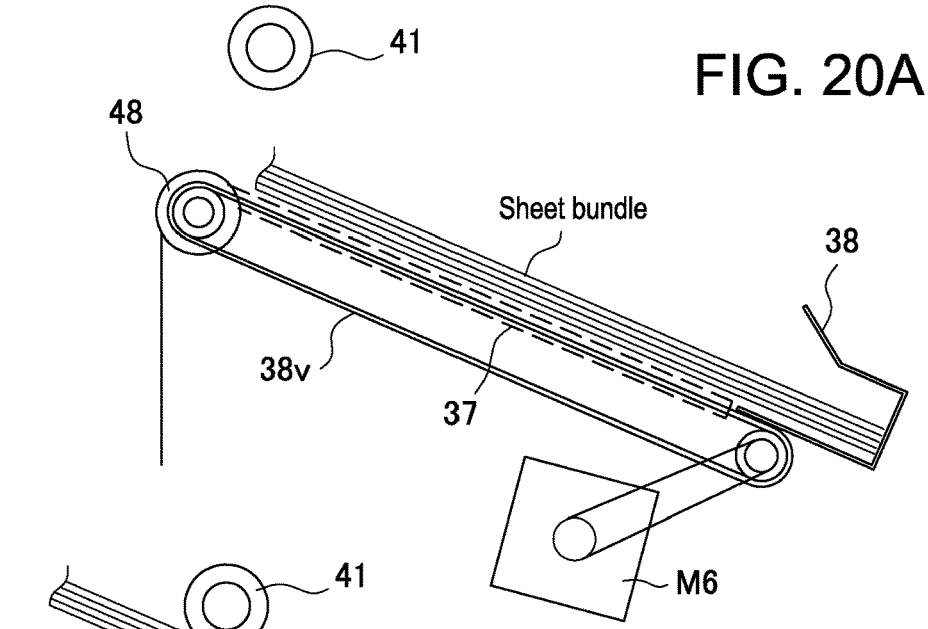

FIG. 20A

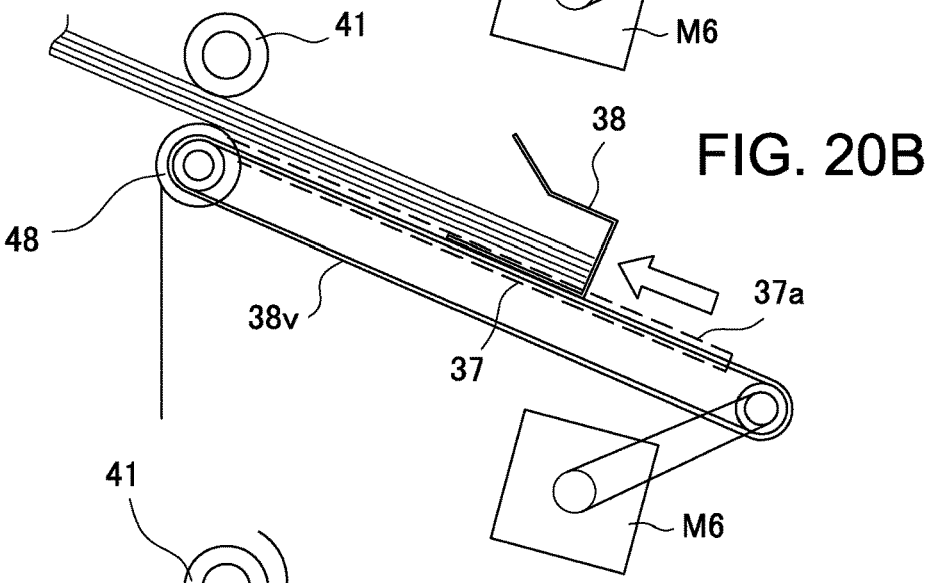

FIG. 20B

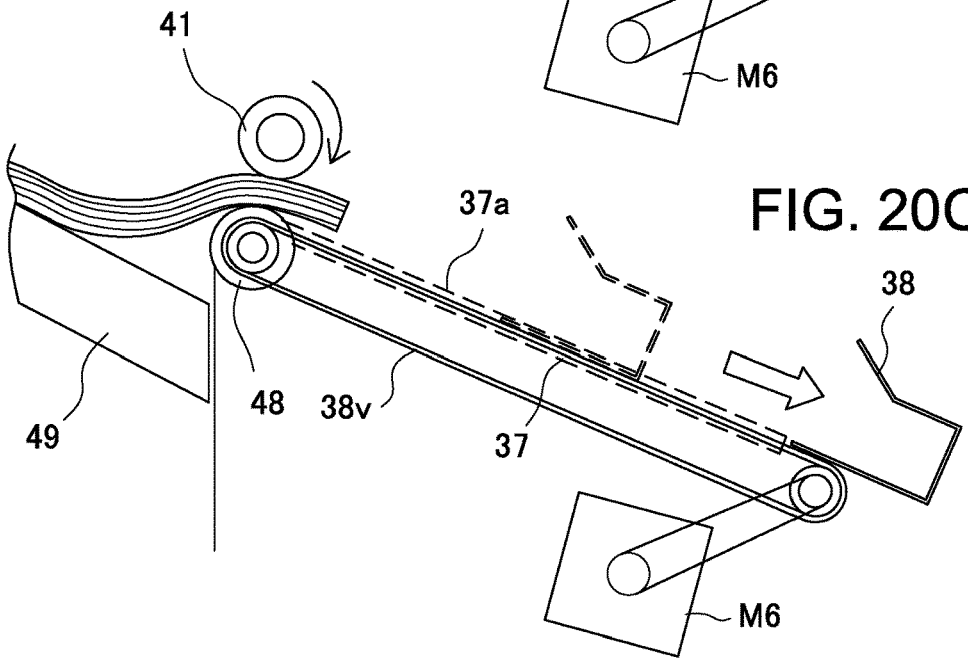

FIG. 20C

FIG. 21A

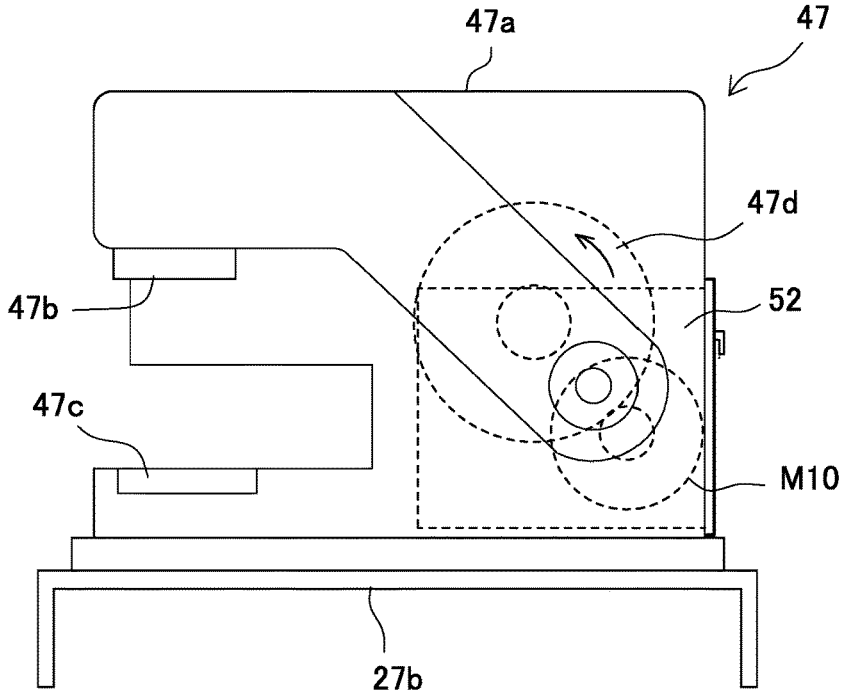

FIG. 21B

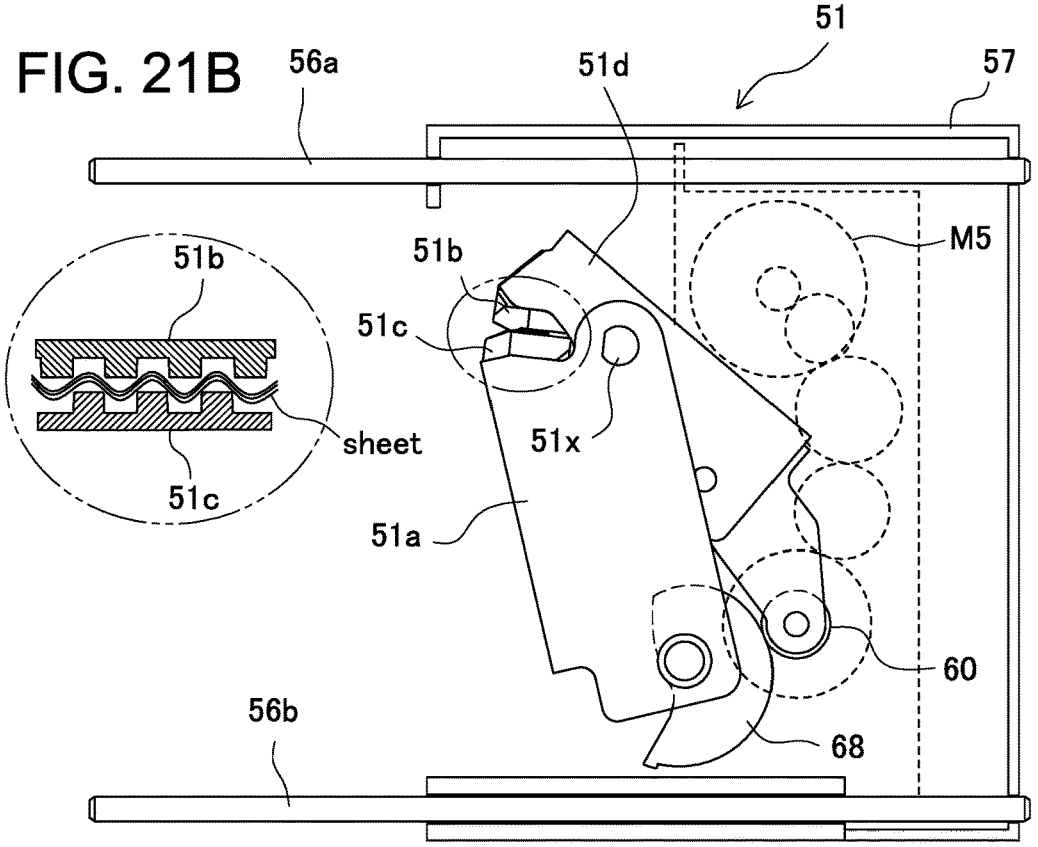

FIG. 22

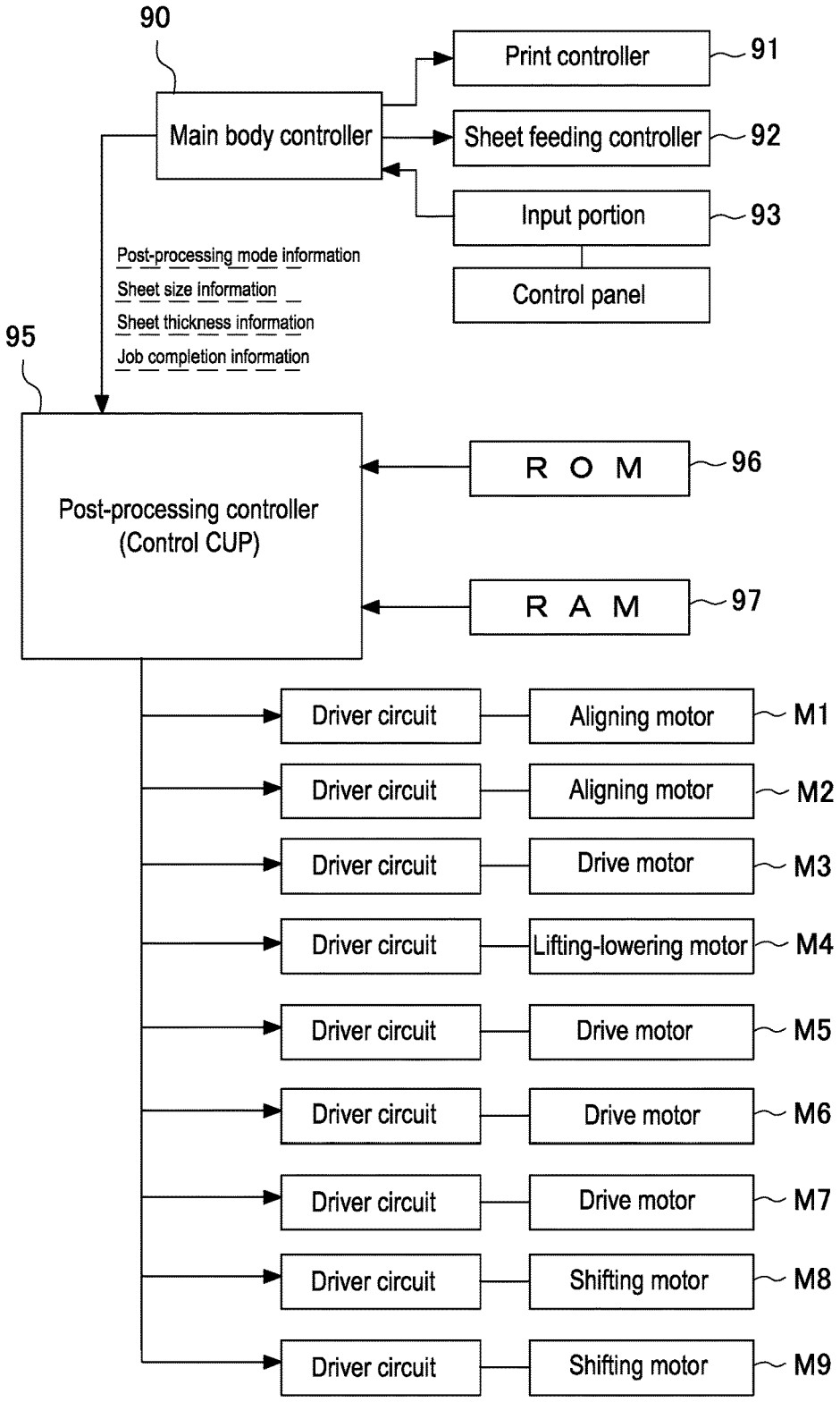
90
Main body controller
Print controller
91
Sheet feeding controller
92
Input portion
93
Control panel
Post-processing mode information
Sheet size information
Sheet thickness information
Job completion information
95
Post-processing controller
(Control CUP)
R O M
96
R A M
97
Driver circuit
Aligning motor
M1
Driver circuit
Aligning motor
M2
Driver circuit
Drive motor
M3
Driver circuit
Lifting-lowering motor
M4
Driver circuit
Drive motor
M5
Driver circuit
Drive motor
M6
Driver circuit
Drive motor
M7
Driver circuit
Shifting motor
M8
Driver circuit
Shifting motor
M9

FIG. 23

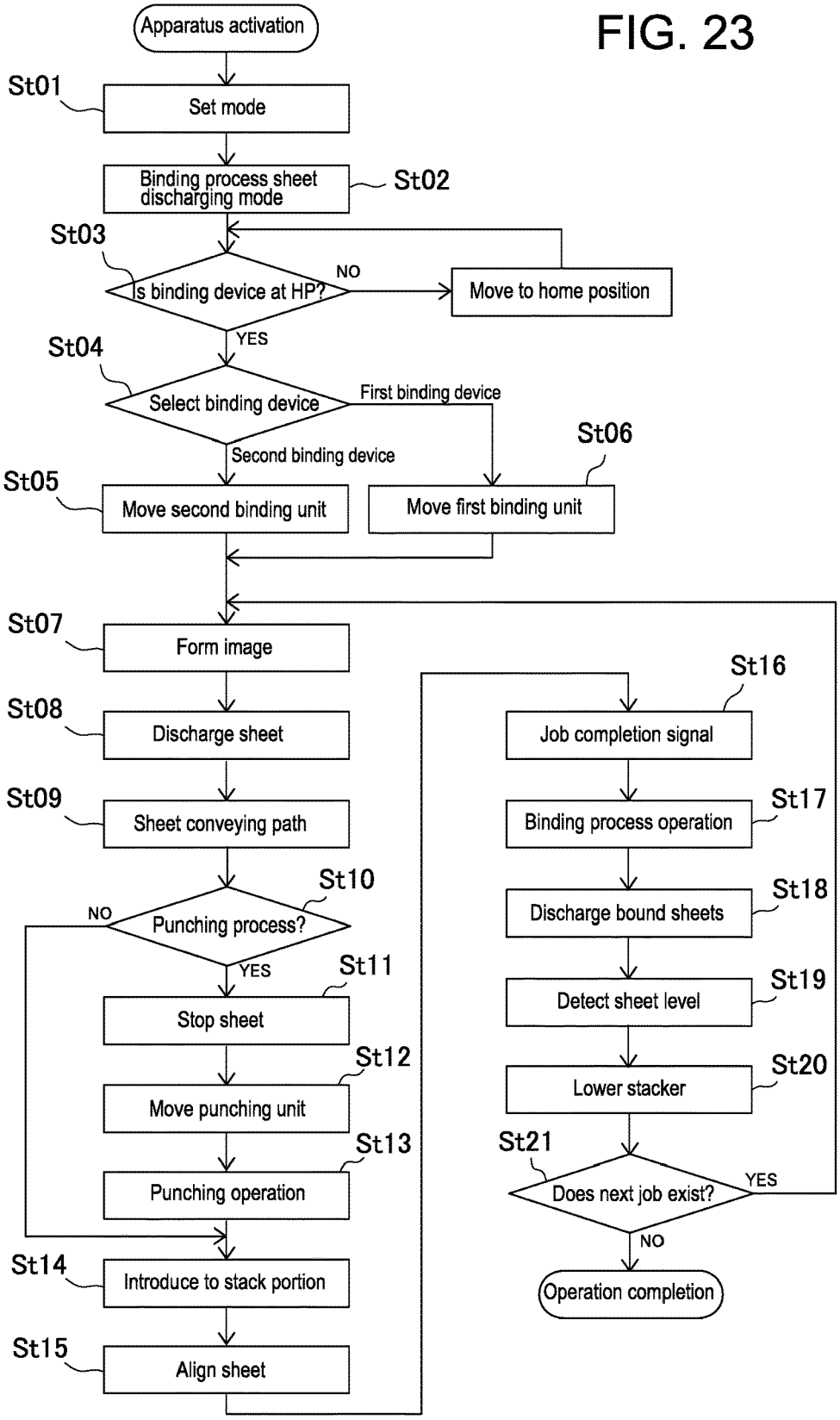
Apparatus activation
St01
Set mode
Binding process sheet discharging mode
St02
St03
Is binding device at HP?
NO
Move to home position
YES
St04
Select binding device
First binding device
Second binding device
St06
St05
Move second binding unit
Move first binding unit
St07
Form image
St08
Discharge sheet
St09
Sheet conveying path
St10
Punching process?
NO
YES
St11
Stop sheet
St12
Move punching unit
St13
Punching operation
St14
Introduce to stack portion
St15
Align sheet
St16
Job completion signal
St17
Binding process operation
St18
Discharge bound sheets
St19
Detect sheet level
St20
Lower stacker
St21
Does next job exist?
YES
NO
Operation completion

FIG. 24

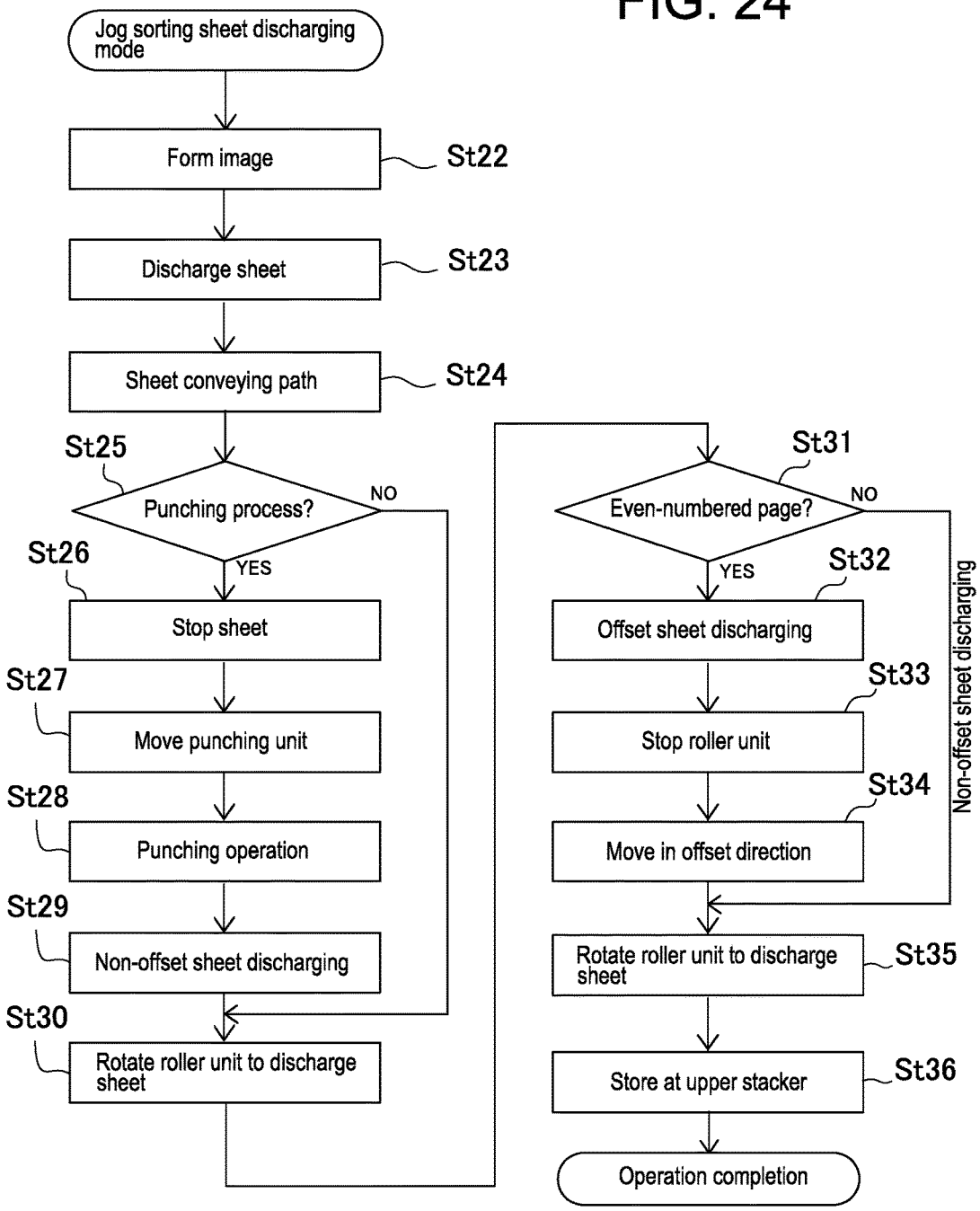
Jog sorting sheet discharging mode
Form image
St22
Discharge sheet
St23
Sheet conveying path
St24
St25
Punching process?
NO
YES
St26
Stop sheet
St27
Move punching unit
St28
Punching operation
St29
Non-offset sheet discharging
St30
Rotate roller unit to discharge sheet
St31
Even-numbered page?
NO
YES
St32
Offset sheet discharging
St33
Stop roller unit
St34
Move in offset direction
Non-offset sheet discharging
Rotate roller unit to discharge sheet
St35
Store at upper stacker
St36
Operation completion

FIG. 25A

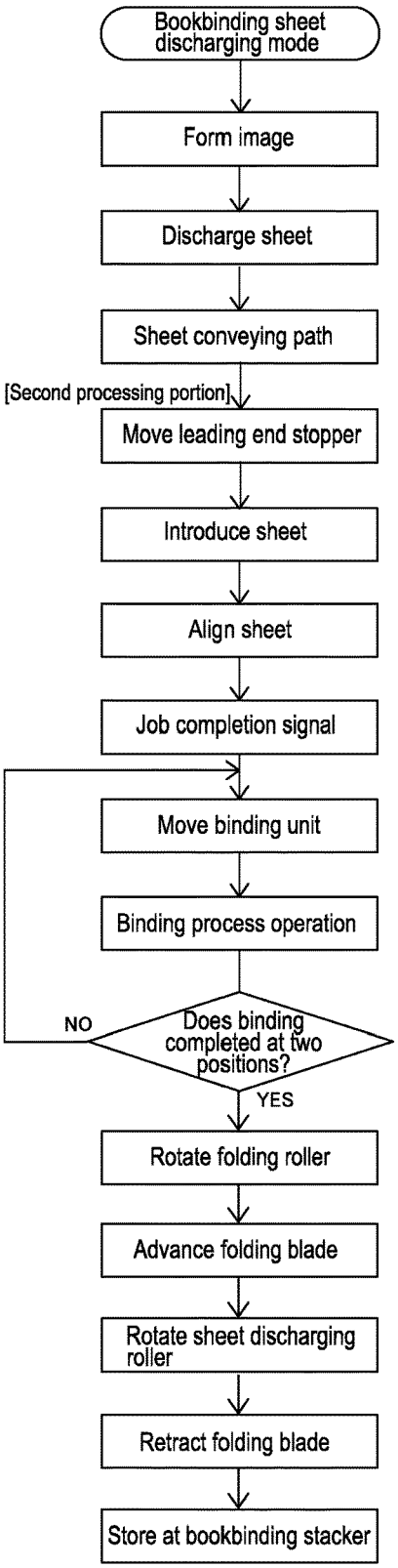

FIG. 25B

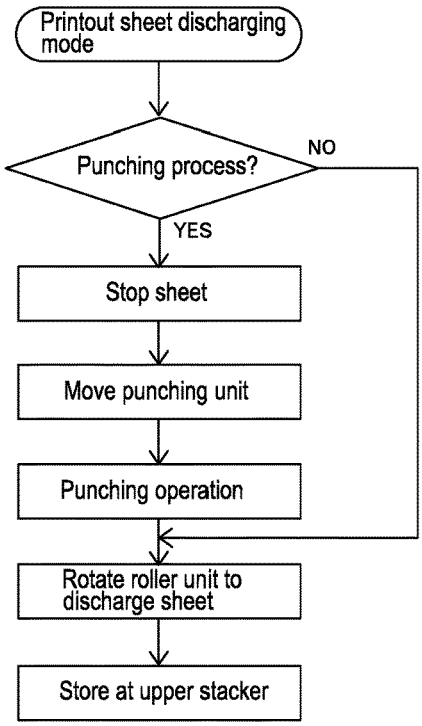

SHEET PROCESSING APPARATUS AND IMAGE FORMING SYSTEM HAVING THE SAME

CROSS-REFERENCE TO RELATED APPLICATION

This is a continuation application of U.S. patent application Ser. No. 15/398,336 filed on Jan. 4, 2017, which is a divisional application of U.S. patent application Ser. No. 14/570,692 filed on Dec. 15, 2014, which is based on, and claims priority from, Japanese Application No. 2013-259469 filed Dec. 16, 2013; No. 2013-260097 filed Dec. 17, 2013; and No. 2013-260098 filed Dec. 17, 2013, the disclosures of which are hereby incorporated by reference herein in its entirety.

BACKGROUND OF THE INVENTION

1. Field of the Invention

The present invention relates to a sheet processing apparatus and an image forming system having the sheet processing apparatus.

2. Description of Related Arts

In general, there have been a sheet storing apparatus and a sheet processing apparatus which include a mechanism to perform a binding process on a manually-set sheet bundle with a dedicated manual setting portion arranged outside an apparatus (see Japanese Patent Application Laid-open No. 2008-156067, Japanese Patent Application Laid-open No. 2007-039211, Japanese Patent Application Laid-open No. 2005-096392, and Japanese Patent No. 5010526).

Accordingly, there has been a problem that an apparatus (housing) is upsized as a whole owing to necessity for arranging a space required for a manual setting portion as well as a space arranged in an apparatus main body to be required for a process such as forming a punch hole at sheets, and sorting sheets at differentiating positions in a direction perpendicular to a sheet discharging direction and a space arranged in an apparatus main body to be required for a drive connection mechanism for lifting-lowering a tray.

SUMMARY OF THE INVENTION

A sheet processing apparatus comprises a conveying portion which conveys sheets; a stack portion on which sheets conveyed in a conveying direction by the conveying portion are stacked; a first regulating portion which is configured to regulate a position of a sheet bundle stacked on the stack portion, the first regulating portion regulating the position of the sheet bundle in a crossing direction crossing the conveying direction by contacting an end of the sheet bundle in the crossing direction; a second regulating portion which is configured to regulate a position of a sheet bundle, stacked on the stack portion, in the conveying direction by contacting an end of the sheet bundle in the conveying direction; a first binding device which is configured to move in the crossing direction so that the first binding device moves from a first side of the sheet processing apparatus to a second side of the sheet processing apparatus and moves from the second side to the first side, and which is configured to bind a corner portion of a sheet bundle by a staple at a first position, the corner portion including an end where the first regulating portion has contacted and an end where the second regulating portion has contacted, the corner portion being on the first side of the sheet bundle, the first binding device being configured to bind a corner portion of a sheet bundle, which is stacked on the stack portion, by a staple at a second position, the corner portion including an end which is on the second side of the sheet bundle which is stacked on the stack portion and an end where the second regulating portion has contacted, the corner portion being on the second side of the sheet bundle; a second binding device which is configured to bind a corner portion of a sheet bundle without a staple, the corner portion including an end where the first regulating portion has contacted and an end where the second regulating portion has contacted, the corner portion being on the first side of the sheet bundle, the second binding device including a first pressurizing portion and a second pressurizing portion, the first pressurizing portion and the second pressurizing portion sandwiching the sheet bundle in a case that the second binding device binds the sheet bundle, the first pressurizing portion and the second pressurizing portion being configured to move integrally, the second binding device being movable on the first side of the second position relative to the crossing direction, the second binding device not moving to the second side of the second position relative to the crossing direction; and a controller configured to the first binding device to move in the crossing direction, the controller being configured to bind a corner portion of a sheet bundle by the first binding device, the corner portion including an end where the first regulating portion has contacted and an end where the second regulating portion has contacted, the corner portion being on the first side of the sheet bundle.

The controller is configured to bind a corner portion of a sheet bundle, which is stacked on the stack portion, by the first binding device, the corner portion including an end which is on the second side of the sheet bundle which is stacked on the stack portion and an end where the second regulating portion has contacted, the corner portion being on the second side of the sheet bundle.

The controller is configured to bind a corner portion of a sheet bundle without a staple by the second binding device, the corner portion including an end where the first regulating portion has contacted and an end where the second regulating portion has contacted, the corner portion being on the first side of the sheet bundle.

The controller is configured to move the second binding device on the first side of the second position relative to the crossing direction, the controller not to move the second binding device on the second side of the second position relative to the crossing direction.

BRIEF DESCRIPTION OF THE DRAWINGS

FIG. **1** is an explanatory view of a whole configuration of an image forming system according to the present invention,

FIG. **2** is an explanatory view of a whole configuration of a sheet processing apparatus in the image forming system of FIG. **1**,

FIG. **3** is an enlarged view of a main part of a path in the apparatus of FIG. **2**,

FIG. **4** is a perspective view of a manual setting portion in the sheet processing apparatus,

FIG. **5** is a whole perspective view of a punching unit in the apparatus of FIG. **2**,

FIG. **6** is an explanatory view of a shifting mechanism of the punching unit,

FIG. **7** is a view illustrating a state that the punching unit is moved to an apparatus front side from the state of FIG. **6**,

FIG. **8** is a perspective view illustrating a structure of a roller shifting mechanism in the apparatus of FIG. **2**,

FIG. **9** is a view illustrating an arrangement relation between the roller shifting mechanism and the setting portion,

FIG. **10** is a structural explanatory view of a shifting member in the apparatus of FIG. **2**,

FIG. **11** illustrates a movement trajectory of a stapling unit and a press binding unit,

FIG. **12** is an explanatory view illustrating an arrangement relation among alignment positions and the stapling unit in the apparatus of FIG. **2**,

FIG. **13** is an explanatory view of a differential device of a binding device in the apparatus of FIG. **2**,

FIG. **14** is an explanatory view of a lifting-lowering mechanism of a tray in the apparatus of FIG. **2**,

FIG. **15** is an explanatory view of a frame structure in the apparatus of FIG. **2**,

FIG. **16** is an enlarged view of a main part of FIG. **12**,

FIG. **17** is a perspective view illustrating the frame structure in the apparatus of FIG. **2**,

FIGS. **18**A and **18**B are perspective views of an emplacement leg in the apparatus of FIG. **2**, while FIG. **18**A illustrates an upper face side and FIG. **18**B illustrates a lower face side,

FIGS. **19**A and **19**B are sectional views of the emplacement leg in the apparatus of FIG. **2**, while FIG. **19**A illustrates a locked state and FIG. **19**B illustrates a lock-released state,

FIGS. **20**A to **20**C are operational explanatory views of a sheet bundle discharging device, while FIG. **20**A illustrates a state that a sheet bundle is located at a binding position on the stack portion, FIG. **20**B illustrates a midstream state of conveying the sheet bundle from a processing position to the downstream side, and FIG. **20**C illustrates a state right before the sheet bundle is discharged to a stack tray at the downstream side,

FIGS. **21**A and **21**B illustrate structures of binding devices according to the present invention, while FIG. **21**A is a structural explanatory view of the stapling unit and FIG. **21**B is a structural explanatory view of the press binding unit,

FIG. **22** is a block diagram illustrating a control configuration of the apparatus of FIG. **1**,

FIG. **23** is an operational flowchart of a binding process sheet discharging with the apparatus of FIG. **1**

FIG. **24** is an operational flowchart of a jog sorting sheet discharging mode, and

FIGS. **25**A and **25**B illustrate flows of a sheet discharging mode with the apparatus of FIG. **1**, while FIG. **25**A is an operational flowchart of a bookbinding sheet discharging mode and FIG. **25**B is an operational flowchart of a printout sheet discharging mode.

DETAILED DESCRIPTION OF THE PREFERRED EMBODIMENT

[Image Forming Apparatus]

Description will be provided on an image forming apparatus A in an image forming system illustrated in FIG. **1**. In the drawing, the image forming apparatus A has an electrostatic printing mechanism as including an image forming unit A**1**, a scanner unit A**2**, and a feeder unit A**3**.

Emplacement legs **25** for emplacing on an installation face (e.g., a floor face) are arranged at an image forming apparatus housing **1**. Further, the image forming apparatus housing **1** accommodates a sheet feeding portion **2**, an image forming portion **3**, a sheet discharging portion **4**, and a data processing portion **5**.

The sheet feeding portion **2** is structured with cassette mechanisms **2***a* to **2***c* to store sheets having a plurality of sizes on which images are formed and feeds a sheet having a specified size from a main body controller **90** to a sheet feeding path **6**. The plurality of cassette mechanisms **2***a* to **2***c* is arranged at the image forming apparatus housing **1** in a detachably attachable manner. Each cassette mechanism contains a separating mechanism to separate stored sheets one by one and a sheet feeding mechanism to feed a sheet. A conveying roller **7** which feeds sheets fed from the plurality of cassette mechanisms **2***a* to **2***c* to the downstream side is arranged at the sheet feeding path **6**. A pair of resist rollers **8** is arranged at an end of the path so that each sheet is aligned at a leading end thereof.

A large-capacity cassette mechanism **2***d* and a manual tray **2***e* are connected to the sheet feeding path **6**. The large-capacity cassette mechanism **2***d* is structured as an optional unit which stores sheets having a size to be used in great quantities. The manual tray **2***e* is structured to be capable of feeding special sheets such as thick sheets, coating sheets, and film sheets which are difficult to be separately fed.

An electrostatic printing mechanism is illustrated as an example of the image forming portion **3**. A photo conductor **9** (drum, belt), a light emitter **10** which emits an optical beam to the photo conductor **9**, a developer **11**, and a cleaner (not illustrated) are arranged around the photo conductor **9** which rotates. The drawing illustrates a monochrome printing mechanism. Here, a latent image is optically formed at the photo conductor **9** by the light emitter **10**. The developer **11** causes toner ink to adhere to the latent image.

A sheet is fed from the sheet feeding path **6** to the image forming portion **3** in accordance with image-forming timing on the photo conductor **9**. Then, the image is transferred onto the sheet at a transfer charger **12** and fixed by a fixing unit (roller) **13** which is arranged at an image forming apparatus sheet discharging path **14**. An image forming apparatus sheet discharging roller **15** and an image forming apparatus sheet discharging port **16** are arranged at the image forming apparatus sheet discharging path **14** for conveying a sheet to a sheet processing apparatus B which is described later.

The scanner unit A**2** is structured with a platen **17** on which an image document is placed, a carriage **18** which reciprocates along the platen **17**, a light source which is mounted on the carriage **18**, and a reducing optical system **20** (combination of a mirror and a lens) which guides reflection light from the document on the platen **17** to a photoelectric conversion device **19**. A second platen (drive platen) **21** is illustrated in the drawing. The carriage **18** and the reducing optical system **20** read an image of the sheet fed from the feeder unit A**3**. The photoelectric conversion device **19** electrically transfers photoelectrically-converted image data to the image forming portion **3**.

The feeder unit A**3** is structured with a sheet feeding tray **22**, a document feeding path **23** which guides a sheet fed from the sheet feed tray **22** to the drive platen **21**, and a sheet discharge tray **24** which stores a document, an image of which is read at the drive platen **21**.

Not limited to the abovementioned mechanism, the image forming apparatus A may adopt a printing mechanism such as an offset printing mechanism, an ink jet printing mechanism, and an ink ribbon transfer printing mechanism (thermal transfer ribbon printing, sublimation ribbon printing, or the like).

[Sheet Processing Apparatus]

As an apparatus to perform post-processing on sheets discharged from the image forming apparatus sheet discharging port **16** of the image forming apparatus A, the sheet processing apparatus B has following functions as;

(1) A function to stack and store image-formed sheets (first processing portion B**1** and third processing portion B**3**; a printout mode),

(2) A function to sort and store image-formed sheets (third processing portion B**3**; a jog sorting mode),

(3) A function to collate and stack image-formed sheets and perform a binding process thereon (first processing portion B**1**; a binding processing mode),

(4) A function to perform bookbinding with a folding process after image-formed sheets are collated and a binding process is performed thereon (second processing portion B**2**; a bookbinding processing mode), and

(5) A function to form a punch hole at an image-formed sheet (a function of punching; a punch mode).

In the present invention, the sheet processing apparatus B is not necessarily required to have all the abovementioned functions. The sheet processing apparatus B may be appropriately arranged in accordance with apparatus specifications (design specifications).

Even in this case, it is required to include a binding processing portion (the first processing portion B**1**) which collates and stacks sheets and a first binding unit (a stapling unit which performs later-described staple binding) **47**, and a second binding unit (a non-staple binding unit **51** which performs later-described non-staple binding) which are arranged at the binding processing portion. Further, it is required to have a stack structure to perform stacking after a binding process is performed with a selected binding device.

FIG. **2** illustrates a detailed structure of the sheet processing apparatus B. The sheet processing apparatus B includes an introducing port **26** which is connected to the image forming apparatus sheet discharging port **16** of the image forming apparatus A and stores sheets introduced through the introducing port **26** at a storage portion (a first stack tray member **49**, a second stack tray member **61**, and a third stack tray member **71** which are described later) after a post-process is performed thereon.

In the post-processing apparatus B in the drawing, a sheet fed to a sheet conveying path **28** is conveyed to the first stack tray (hereinafter, called a first tray member) **49** from the first processing portion B**1**, to the second stack tray (hereinafter, called a second tray member) **61** from the second processing portion B**2**, or to the third stack tray (hereinafter, called a third tray member) **71** from the third processing portion B**3**.

The first processing portion B**1** is arranged at a path exit (first sheet discharging port **35**) of the sheet conveying path **28**. Here, sequentially-fed sheets are stored at the first tray member (first storage portion, as the case may be) **49** after a binding process is performed thereon with the sheets being collated and stacked at a stack portion.

The second processing portion B**2** is arranged at a path exit (second switchback path end described later) **62** branched from the sheet conveying path **28**. Here, a folding process is performed on sequentially-fed sheets and the sheets are stored at the second tray member (second storage portion, as the case may be) **61** after a binding process is performed thereon with the sheets being collated and stacked.

The third processing portion B**3** is assembled to the sheet conveying path **28**. Here, conveyed sheets are stored at the third tray member (third storage portion, as the case may be) **71** after being offset by a predetermined amount in a direction intersecting with (in the present embodiment, a direction perpendicular to) a conveying direction (a direction in which sheets are conveyed to the sheet conveying path **28**) and sorted. In the following, each structure will be described in detail.

[Processing Apparatus Housing]

As illustrated in FIG. **2**, the sheet processing apparatus B includes a processing apparatus housing **27**, the sheet conveying path **28** which is embedded in the processing apparatus housing **27** as having the introducing port **26** and the first sheet discharging port **35**, the first to third processing portions B**1**, B**2**, B**3** which perform a post-processing respectively on sheets fed from the sheet conveying path **28**, and the first to third tray members **49**, **61**, **71** which store sheets fed from the respective processing portions.

The processing apparatus housing **27** in the drawing is arranged to have a height dimension from the installation face being approximately the same as the image forming apparatus housing **1** of the image forming apparatus A which is located at the upstream side. Then, the image forming apparatus sheet discharging port **16** of the image forming apparatus A and the introducing port **26** of the sheet processing apparatus B are connected.

The processing apparatus housing **27** illustrated in FIG. **2** is structured with an apparatus frame **70** and an external casing **73**. The apparatus frame **70** forms a framework of a box-shaped apparatus as illustrated in the drawing. The apparatus frame **70** includes a front-side side frame **70***f* which is located at the front side in a state of FIG. **1**, a rear-side side frame **70***r* which is located at the rear side, and stay members **70***s* (connection reinforcement members) which connect both the side frames **70**. The sheet conveying path **28**, a stack portion **37**, the first tray member **49**, and the like which are described later are attached between the right-left side frames **70**.

The external casing **73** includes a side chassis (a front cover **73***f* which covers the front-side side frame **70***f* and a rear cover **73***r* which covers the rear-side side frame **70***r*).

Not limited to the illustrated shape, naturally, the processing apparatus housing **27** may have an appropriate shape in design. Further, not limited to the structure having right-left side frames and connection stays, the apparatus frame **70** may adopt a frame structure variously such as a monocoque structure.

[Sheet Conveying Path]

The sheet conveying path **28** is structured with a linear path which traverses the processing apparatus housing **27** approximately in the horizontal direction. The sheet conveying path **28** includes the introducing port **26** which is connected to the image forming apparatus sheet discharging port **16** of the image forming apparatus A, and the first sheet discharging port **35** which is arranged at the opposite side to the introducing port **26** as traversing the apparatus.

The sheet conveying path **28** is provided with a pair of conveying rollers (a sheet conveying device such as a roller and a belt, hereinafter, simply called a conveying roller) **29** which convey a sheet from the introducing port **26** toward the first sheet discharging port **35**, a processing portion sheet discharging roller **36** (may be a belt as well) which is arranged at the first sheet discharging port **35**, an inlet sensor S**1** which detects a leading end and a tailing end of a sheet to be introduced to the path, and a sheet discharging sensor S**2** which detects a leading end and a tailing end of a sheet at the path sheet discharging port.

The sheet conveying path **28** is connected to the first processing portion B**1** and the second processing portion B**2**

so that sheets are sorted and conveyed thereto from the introducing port **26**. The second processing portion B**2** is connected to the upstream side in the path sheet discharging direction and the first processing portion B**1** is connected to the downstream side therein.

The sheet conveying path **28** having an approximately linear shape is branched to convey a sheet from the introducing port **26** toward the second processing portion B**2**. Further, the sheet conveying path **28** is structured to guide a sheet from the introducing port **26** to the first processing portion B**1** which is arranged at the downstream side of the first sheet discharging port **35**.

Further, a third sheet conveying path **30** which guides a sheet on which a post-process is not performed at the first processing portion B**1** or the second processing portion B**2** to the third tray member **71** is connected to the sheet conveying path **28**, so that a sheet is guided to the third tray member **71**.

The third processing portion B**3** is arranged at the sheet conveying path **28**. The third processing portion B**3** performs jog sorting to sort a sheet to be conveyed on the path by offsetting the sheet in a direction perpendicular to a sheet discharging direction. That is, the third processing portion B**3** is arranged at the sheet conveying path **28** and sheets jog-sorted at the third processing portion B**3** are stored at the third tray member **71**.

As illustrated in FIG. **2**, at the sheet conveying path **28**, the third sheet conveying path **30**, a second sheet conveying path **32**, and a first sheet conveying path **31** are arranged as being branched in the order thereof from the introducing port **26** to the downstream side. A first path switching device **33** and a second path switching device **34** are arranged as illustrated in FIG. **2**.

The second sheet conveying path **32** and the first sheet conveying path **31** are structured as a switchback path which guides a sheet to each processing portion as reversing the sheet conveying direction.

The third sheet conveying path **30** guides sheets fed from the introducing port **26** to the third tray member **71**, the second sheet conveying path **32** guides sheets fed from the introducing port **26** to the second tray member **61**, and the first sheet conveying path **31** guides sheets fed from the introducing port **26** to the first tray member **49**.

The third processing portion B**3** performs a jog sorting process on sheets at the path to be guided to the third tray member **71**, the second processing portion B**2** performs a bookbinding process on sheets to be guided to the second tray member **61**, and the first processing portion B**1** performs a binding process on sheets to be guided to the first tray member **49**.

The first path switching device **33** is structured with a flapper guide which changes a sheet conveying direction and is connected to a driving device such as an electromagnetic solenoid and a miniature motor (not illustrated). At the first path switching device **33**, a sheet fed from the introducing port **26** is selected to be guided to the third sheet conveying path **30** or to the first and second sheet conveying paths **31**, **32**.

At the second path switching device **34**, a sheet fed from the introducing port **26** is selected to be guided to the second processing portion B**2** or the first processing portion B**1** at the downstream side thereof. A driving device (not illustrated) is connected to the second path switching device **34** as well. Further, a punching unit **100** which forms a punch hole at an introduced sheet is arranged at the sheet conveying path **28**.

[First Processing Portion]

The first processing portion B**1** arranged at the downstream side of the sheet conveying path **28** is structured with the stack portion **37** which collates and stacks sheets fed from the first sheet discharging port **35** and a binding processing mechanism which performs a binding process on a stacked sheet bundle.

As illustrated in FIG. **2**, a step is formed at the first sheet discharging port **35** of the sheet conveying path **28** and the stack portion **37** is arranged therebelow. The first sheet conveying path (first switchback path) **31** which guides a sheet from the first sheet discharging port **35** as reversing a conveying direction is formed between the first sheet discharging port **35** and the stack portion **37**.

A sheet introducing mechanism which introduces a sheet from the first sheet discharging port **35** onto the stack portion **37** is arranged between the first sheet discharging port **35** and the stack portion **37**. A positioning mechanism which positions sheets at a predetermined binding position and a sheet bundle discharging mechanism which discharges a bound sheet bundle to the first tray member **49** at the downstream side are arranged at the stack portion **37**. Each configuration is described later.

Here, the stack portion **37** illustrated in FIG. **2** bridge-supports a sheet fed from the first sheet discharging port **35** between the stack portion **37** and the first tray member **49** at the downstream side. That is, a sheet fed from the first sheet discharging port **35** is to be bridge-supported with the leading end thereof being on the upmost sheet on the first tray member **49** at the downstream side and the tailing end thereof being on the stack portion **37**.

[Second Processing Portion]

A second sheet conveying path (second switchback path) **32** is branched from and connected to the upstream side of the first sheet conveying path (first switchback path) **31** at the sheet conveying path **28** to guide a sheet to the second processing portion B**2**.

At the second processing portion B**2**, sheets fed from the sheet conveying path **28** are collated and stacked, and then, an inward-fold processing (hereinafter, called a magazine finishing) is performed on the sheets as performing a binding process on the center part thereof. The second tray member **61** is arranged at the downstream side of the second processing portion B**2** to store a bookbinding-processed sheet bundle.

The second processing portion B**2** includes a second processing guide member **66** which stacks sheets into a bundle shape, a leading end regulating stopper **67** which performs positioning of sheets at a predetermined position on the second processing guide member **66**, a center-binding stapling unit **63** which performs a binding process at the center part of the sheets which are positioned by the leading end regulating stopper **67**, and a fold-processing mechanism (a pair of folding rollers **64** and a folding blade **65**) which folds a sheet bundle at the center part after the binding process is performed.

As disclosed in Japanese Patent Application Laid-open No. 2008-184324, Japanese Patent Application Laid-open No. 2009-051644, and the like, the center-binding stapling unit **63** adopts a mechanism which performs a binding process while a sheet bundle is moved along the sheet center part (line) with the sheet bundle nipped by a head unit and an anvil unit.

Further, as illustrated in FIG. **2**, the fold-processing mechanism has a structure to perform folding with rolling of the pair of folding rollers **64** after a folding line part of a sheet bundle is inserted by the folding blade **65** between the pair of folding rollers **64** which are mutually press-con-

tacted. Such a mechanism is also disclosed in Japanese Patent Application Laid-open No. 2008-184324, Japanese Patent Application Laid-open No. 2009-051644, and the like.

In the drawing, the first processing portion B**1** and the sheet conveying path **28** are arranged approximately in the horizontal direction, the second sheet conveying path **32** which guides sheets to the second processing portion B**2** is arranged in the vertical direction, and the second processing guide member **66** which collates and stacks sheets is arranged approximately in the vertical direction.

As described above, the sheet conveying path **28** is arranged in a direction of traversing the processing apparatus housing **27** and the processing conveying path (second sheet conveying path **32**) B**2** is arranged in the vertical direction, so that the apparatus can be slimmed.

The second tray member **61** is arranged at the downstream side of the second processing portion B**2** to store a sheet bundle which is folded into a magazine shape. In the drawing, the second tray member **61** is arranged below the first tray member **49**. In view of that a frequency in use of the first tray member **49** is higher than a frequency in use of the second tray member **61**, the first tray member **49** is arranged at a height position at which sheets are easily taken out from the first tray member **49**.

[Third Processing Portion]

The third sheet conveying path **30** is arranged at the sheet conveying path **28** at the upstream side of the first sheet conveying path **31** and the second sheet conveying path **32**, so that a sheet is guided from the introducing port **26** to the third tray member **71**. Further, a roller shifting mechanism (not illustrated) which offsets a fed sheet by a predetermined amount in a perpendicular direction is arranged at the path (the sheet conveying path **28** or the third sheet conveying path **30**) for guiding the sheet from the introducing port **26** to the third tray member **71**.

Then, sheets are stored onto the third tray member **71** while the sheets to be discharged from the introducing port **26** to the third tray member **71** are shifted (offset) in the perpendicular direction so that the sheets are sorted for each bundle. Since a variety of mechanisms are known as such a jog sorting mechanism, description thereof is skipped.

[Structure of Manual Setting Portion]

A sheet processing mechanism portion which stores sheets at the first tray member **49** after guiding the sheets from the sheet conveying path **28** to the stack portion **37** and performing a post-process on the sheets, and a manual setting portion (hereinafter, called a setting portion) **77** for performing a binding process while an externally-prepared sheet bundle is inserted to the external casing **73** are arranged at the processing apparatus housing **27**.

When a binding processing mechanism is arranged at the exterior of the sheet processing apparatus B, the setting portion **77** is convenient for an operator to collate, for example, image-read document sheets and performing a binding process thereon. Accordingly, a sheet bundle collated by an operator is arranged at a part of a casing and a mechanism which performs a binding process with a built-in stapling unit or another binding processing unit is arranged therein.

The setting portion **77** arranged for the abovementioned purpose includes a slit-shaped opening **77***a*, a setting face **77***b*, and a position regulating face **77***c*. Further, the binding processing mechanism which performs a binding process on a sheet bundle set on the setting face is arranged in the external casing **73**.

As illustrated in FIG. **4**, the slit-shaped opening **77***a* is arranged at the side chassis (front cover **73***f*) located at the apparatus front side, and the setting face **77***b* and the position regulating face **77***c* are arranged at the side frame **70***f*, so that a sheet bundle S is inserted thereto from the outside. In the illustrated apparatus, the slit-shaped opening **77***a* is arranged at a position to support a sheet bundle on the same plane as the stack portion **37** described with reference to FIG. **2** as being mutually adjacent thereto.

According to the above arrangement, a binding process is performed on a manually-set sheet bundle while the later-described binding processing mechanism (stapling unit (first binding unit **47**)) capable of being moved along an end edge of the stack portion **37** is moved to the setting face **77***b* which is arranged at a position adjacent to the stack portion **37**. Thus, the setting face **77***b* is arranged to form the same plane with the sheet placement face **37***a* of the stack portion **37**.

The slit-shaped opening **77***a* is arranged at the front cover **73***f* so that a sheet bundle can be inserted onto the setting face **77***b* (on the same plane as the stack portion **37**). The whole or apart of the front cover **73***f* at which the slit-shaped opening **77***a* is formed is hinge-connected to the apparatus frame **70** as being capable of being opened and closed.

A sheet bundle S which is manually inserted through the slit-shaped opening **77***a* is inserted to a binding position along the setting face **77***b* and is regulated with an end face thereof being abutted to the position regulating face **77***c* at the binding position. Thus, the sheet bundle S which is inserted from the outside has the lower face thereof supported by the setting face **77***b* and the end face thereof abutted to and regulated by the position regulating face **77***c* so as to be positioned at the predetermined binding position.

The stapling unit (first binding unit) **47** is arranged at the inner side of the setting face **77***b* and the position regulating face **77***c*. In the illustrated apparatus, the binding unit **47** is supported by a guide rail to be movable between the binding position (second position) at the stack portion **37** and the binding position (first position) at the setting face **77***b* and is moved by a drive mechanism which includes a shifting motor.

[Binding Process Operation at Manual Setting Portion]

Description is provided on a binding process operation. In an operation mode in which a binding process (e.g., post-processing at the second processing portion B**2** or the third processing portion B**3**) is not performed at the stack portion **37**, a later-described post-processing controller **95** causes the first binding unit **47** to wait at the (manual) binding position (first position) at the setting face **77***b* or the vicinity thereof. In the illustrated apparatus, a home position of the first binding unit **47** is set at the manual binding position Mp being at the front side of the side frame **70***f*.

[Punching Unit]

Description is provided on the punching unit **100** which is arranged at the sheet conveying path **28** for performing a predetermined process (forming a punch hole) on a sheet fed from the introducing port **26**. The punching unit **100** forms the specified number of holes with a plurality of punching members **101***a* to **101***e* arranged at predetermined intervals in a direction perpendicular to the sheet conveying direction of the sheet conveying path **28**.

FIG. **5** illustrates a whole structure of the punching unit **100**. The punching unit **100** is structured with a unit frame **102**, the plurality of punching members **101***a* to **101***e* which are arranged at the unit frame **102** to be vertically movable, a plurality of rotary cam devices **103***a* to **103***e* which vertically move (reciprocate in the punching direction) the

respective punching members, and a drive motor M7 which drives the plurality of rotary cam devices **103***a* to **103***e*.

A waste box **104** is arranged below the plurality of punching members **101***a* to **101***e* for storing punch waste sheet pieces. The waste box **104** is attached to the apparatus frame **70** (being different from the unit frame **102**) slidably on a waste box guide rail **105**.

A punch jam releasing device **106** is a rotary operating member. When jamming occurs at the plurality of punching members **101***a* to **101***e* or when an error occurs at the drive motor M7, the plurality of punching members **101***a* to **101***e* biting a sheet is separated (detached) therefrom by forcedly rotating the plurality of rotary cam devices **103***a* to **103***e*. Accordingly, the punch jam releasing device **106** is structured with a manual rotating knob which is connected to a punch driving rotary shaft **107** for the plurality of rotary cam devices **103***a* to **103***e*.

As illustrated in FIG. **6**, the unit frame **102** includes a punch upper frame **102***a* and a punch lower frame **102***b* respectively having a predetermined length in a direction perpendicular to the sheet conveying direction of the sheet conveying path **28**. The plurality of punching members **101***a* to **101***e* are arranged at the punch upper frame **102***a* at the predetermined intervals in the direction perpendicular to the sheet conveying direction (hereinafter, called a conveyance perpendicular direction) as being capable of reciprocating in the punching direction (movable upward and downward).

Punching holes (dies) are formed at the punch lower frame **102***b* at positions being opposed respectively to the plurality of punching members **101***a* to **101***e*. Further, the punch driving rotary shaft **107** is arranged at the unit frame **102**. The plurality of rotary cam devices **103***a* to **103***e* which vertically move the plurality of punching members **101***a* to **101***e* are attached to the punch driving rotary shaft **107**. The drive motor M7 is connected to the punch driving rotary shaft **107** via a transmission mechanism.

The plurality of rotary cam devices **103***a* to **103***e* in FIG. **6** are formed of cylindrical cam members corresponding to the plurality of punching members **101***a* to **101***e* as being axially-fixed to the punch driving rotary shaft **107**. Each of the punching members **101***a* to **101***e* is connected to each of the cylindrical cam members with a connection pin. The plurality of punching members **101***a* to **101***e* are vertically moved in the punching direction with rotation of the punch driving rotary shaft **107** in a predetermined angle range.

Here, the punching members **101***b*, **101***d* being in a first group (e.g., for forming two holes) are vertically moved in the punching direction in a first rotational angle range of the punch driving rotary shaft **107** and the punching members **101***a*, **101***c*, **101***e* being in a second group (e.g., for forming three holes) are vertically moved in the punching direction in a second rotational angle range being different from the first rotational angle range.

Accordingly, the later-described post-processing controller **95** can cause the punching members **101***b*, **101***d* in the first group to perform punching action with two-way rotation of the punch driving rotary shaft **107** in a predetermined angle range and cause the punching members **101***a*, **101***c*, **101***e* in the second group to perform punching action with two-way rotation of the punch driving rotary shaft **107** in a different angle range therefrom.

The waste box **104** is arranged below the plurality of punching members **101***a* to **101***e*. The waste box **104** is supported by the waste box guide rail **105** arranged at the apparatus frame **70** as being detachably attachable from the apparatus front side (in the drawing, from the front cover **73***f* side).

That is, the abovementioned front cover **73***f* is hinge-connected to the apparatus frame **70** as being capable of being opened and closed. The waste box **104** is to be detached to the outside of the apparatus in a state that the front cover **73***f* is opened.

As described above, the drive motor M7 is connected to the punch driving rotary shaft **107** via a speed-reducing mechanism (gear transmission mechanism). Further, a rotary member (punch jam releasing device **106**) is arranged at the punch driving rotary shaft **107** at the front side of the side frame **70***f* as passing through a hole formed at the side frame **70***f* so as to be manually rotated by an operator.

Further, the front cover **73***f* is arranged at the apparatus front side of the apparatus frame **70** in an openable and closable manner, so that the punch jam releasing device **106** arranged at the inner side of the front cover **73***f* can be operated in an opened state. In the opened state, drive power is not supplied (i.e., interrupted) to the drive motor M7.

[Shifting Mechanism of Punching Unit]

The punching unit **100** is movably attached to the apparatus frame **70**. For example, the punching unit **100** is attached to the stay member **70***s* which connects the side frame **70***f* and the side frame **70***r* of the apparatus frame **70** and is slidably fitted on a punch guide member **108** with the unit frame **102** passing through an opening **70***x* formed at the side frame **70***f*.

Further, a punch rack **109** is integrally formed with a part of the punch lower frame **102***b*. The whole unit frame **102** is moved by a shift motor M8 and a punch shift driving pinion **110** arranged at the apparatus frame **70** side.

The punching unit **100** is configured to be movable in the conveyance perpendicular direction in consideration of the following. A sheet introduced to the sheet conveying path **28** becomes in a state of being posinionally shifted in the conveyance perpendicular direction because of (1) dimensional errors of sheet size, (2) sheet positional shifting at the image forming portion, and the like.

If punch holes are formed without correcting the abovementioned positional shifting amount, finishing quality is drastically deteriorated. For correcting positional shifting of an introduced sheet, it is required to move the punching unit **100** in the conveyance perpendicular direction or to move a sheet in the conveyance perpendicular direction.

According to the present invention, the punching unit **100** is moved in the conveyance perpendicular direction in accordance with a sheet fed to the sheet conveying path **28**, the movement direction thereof is set to the same direction as the abovementioned setting portion **77** (to the apparatus front side), and a movement area Px of the punching unit **100** and a sheet setting area Sx of the setting portion are arranged to be mutually overlapped in the conveyance perpendicular direction.

[Shift Control of Punching Unit]

The punching unit **100** is moved to a punch hole position suited with reference to a side edge of a sheet introduced to the sheet conveyance path **28**. As described above, this is for preventing positional shifting of a punch hole position of each sheet due to dimensional errors of the sheet and positional shifting of the sheet introduced to the introducing port.

Any of the following may be adopted as a method for the above;

(1) a sensor array to detect a sheet side edge is arranged at the sheet conveying path **28** and the punching unit **100** is moved by a movement amount which is determined from

size information of a sheet fed from the image forming apparatus A and an array signal of detecting a sheet side edge,

(2) a sensor to detect a sheet side edge is arranged at the punching unit **100** and a sheet side edge is detected by the sensor while the punching unit **100** is moved in the conveyance perpendicular direction at the timing when the sheet enters the introducing path. Then, the punching unit **100** is moved by a movement amount which is determined from the detection signal and sheet size information, and

(3) a plurality of sensors corresponding to sheet size are arranged at the punching unit **100** and a sheet side edge is detected while the punching unit **100** is moved in the conveyance perpendicular direction at the timing when the sheet enters. Then, sheet size is determined from the detected sensor signals and the punching unit **100** is moved in the conveyance perpendicular direction.

In the illustrated apparatus, the method of (3) is adopted. Accordingly, the movement amount of the punching unit **100** can be set to the minimum and the apparatus can be downsized.

Here, for detecting a sheet side edge, sensors S**3** (e.g., for JIS vertical B**5**), S**4** (for vertical A**4**), S**5** (for horizontal B**5**), and S**6** (for horizontal A**4** and vertical A**3**) are arranged at the unit frame **102** for sizes, respectively. A sensor S**1** illustrated in FIG. **2** is an inlet sensor which is arranged at the sheet conveying path **28** and a sensor S**2** is an outlet sensor (sheet discharge sensor). Further, a home position sensor HpS is attached to the unit frame **102**.

The later-described post-processing controller **95** causes the punching unit **100** to move from a home position in a predetermined direction based on a detection signal from the inlet sensor S**1** which detects timing when a sheet leading end enters the sheet conveying path **28**.

Then, a punch position is determined in accordance with sheet size after receiving a detection signal of the sensor which detects a sheet side edge, acknowledging which sensor has transmitted the signal, and determining the sheet size and the sheet side edge. Then, the punching unit **100** is moved to the punch position. Here, the shifting motor M**8** has a rotary shaft connected to an encoder which detects a rotational amount or is structured with a stepping motor.

The post-processing controller **95** causes the punching unit **100** to be moved outward of a sheet (in a direction of arrow A in FIG. **7**) with reference to a signal of the sheet leading end detected by the inlet sensor S**1** and detects a side edge of the sheet. Subsequently, the post-processing controller **95** causes the punching unit **100** to be stopped after overrunning by a predetermined amount and is moved to the sheet center side (in a direction of arrow B).

Then, the side edge of the sheet is detected again and the punching unit **100** is moved to the sheet center side by a predetermined amount with reference to the detection signal to be positioned at a punching position. Thus, the punching unit **100** is moved to the sheet center side after being moved to a position outside the sheet (in a direction from a small-size sheet to a large-size sheet) and the sheet side edge is detected. According to the above, it is possible to eliminate positional errors due to backlash in the drive mechanism.

In the present invention, a movement area (Px in FIG. **6**) of the punching unit **100** in the conveyance perpendicular direction and a sheet setting area (Sx in FIG. **6**) of the setting face **77***b* of the setting portion **77** are arranged at different positions which are distanced in the sheet conveying direction of the sheet conveying path **28**. In addition, the movement area Px of the punching unit **100** and the sheet setting area Sx of the setting face **77***b* are arranged at different positions as forming a step Y.

That is, the area Px and the area Sx are arranged at positions different in the sheet conveying direction as well as positions (as forming the step Y) different in the height direction perpendicular to the sheet conveying direction. Further, the area Px and the area Sx are arranged at positions mutually overlapping in the sheet width direction (as having an overlap amount z). According to the above, the apparatus can be downsized by the overlap amount.

[Conveying Roller Shifting Mechanism at Sheet Conveying Path]

The conveying roller **29** which guides a sheet introduced through the introducing port **26** to the first sheet conveying path **31**, the second sheet conveying path **32**, and the third sheet conveying path **30** is arranged at the sheet conveying path **28**. Further, a sheet discharging roller is arranged at the sheet discharging port of each of the first to third conveying paths. The roller in each path is structured with a pair of rollers which nip and convey a sheet as being connected to a drive motor (not illustrated) to be rotated at the same circumferential speed.

The conveying roller **29** located close to the introducing port **26** is structured with a pair of rollers which are arranged between the punching unit **100** and the first path switching device **33**. The conveying roller **29** is structured with a driving roller **111** and a driven roller **112** which are axially-supported by the right-left side frames **70***f*, **70***r* in a rotatable manner.

A driving rotary shaft **115** is connected to a driving roller shaft **113** with a transmission mechanism **116** (in the drawing, gear transmission). A drive motor (not illustrated) which is commonly used for the processing portion sheet discharging roller **36** is connected to the driving rotary shaft **115**. A driven roller shaft **114** is axially-supported by the right-left side frames **70***f*, **70***r* as being freely movable.

As illustrated in FIG. **8**, conveying rollers **29***s* arranged at the second sheet discharging port are rotatably attached to a shifting member **117** which connects the driving roller shaft **113** and the driven roller shaft **114**. As illustrated in FIG. **10**, the driving roller shaft **113** and the driven roller shaft **114** are connected by the shifting member **117** to be integrally moved in the axial direction (thrust direction). Here, the driving roller shaft **113** and the driven roller shaft **114** are independently rotated in the circumferential direction.

The driving roller shaft **113** is axially-supported by the right-left side frames **70***f*, **70***r*. An end of the driving roller shaft **113** is located in a range indicated as an axial movement area Rs of the conveying roller **29***s* at the front side of the side frame **70***f*. The other end thereof is located at the rear side of the side frame **70***r*. The shifting member **117** (e.g., block member made of synthetic resin) integrally connects the driving roller shaft **113** and the driven roller shaft **114** as being supported thereby.

A shift rack **117***a* is integrally formed with the shifting member **117** and engaged with a shift motor M**9** which is attached to the side frame **70***r* (apparatus frame, as the case may be) and a roller shift transmission pinion **117***b*. According to such a structure, the shifting member **117** can be moved in an axial direction of the conveying roller **29** with rotation of the shift motor M**9** (in the drawing, stepping motor capable of rotating positively and reversely).

A passive gear **116***a* is integrally arranged with the driving rotary shaft **115**. Rotation of the drive motor is transmitted to the passive gear **116***a*. The pair of conveying rollers **29***s* (the driving roller and the driven roller) are pressure-con-

tacted so that a driven rotary shaft **119** is driven to be rotated with rotation of the driving rotary shaft **115**.

In the present invention, the driving rotary shaft **115** and the driven rotary shaft **119** are mutually connected so that one thereof follows axial movement of the other as in the illustrated embodiment. Alternatively, it is also possible that one of the driving roller **111** and the driven roller **112** is attached to the rotary shaft slidably in the axial direction while the other is moved in the axial direction as being interlocked to the movement.

For guiding a sheet to the third processing portion B**3**, the later-described post-processing controller **95** causes the conveying roller **29***s* arranged at the second sheet discharging port to nip a sheet introduced through the introducing port **26** and to temporarily stop or move in the axial direction by a predetermined amount as remaining in the conveyed state (jog shift operation) at the time when the sheet passes through the conveying roller **29** which is located at the upstream side. The movement amount is set during apparatus designing in several ten millimeters as being controlled by the post-processing controller **95** with a rotational amount of the shift motor M**9**.

According to such a structure and control, a sheet introduced to the introducing port **26** is shifted to a different position in the conveyance perpendicular direction for each bundle by the conveying roller **29***s* arranged at the second sheet discharging port and discharged to the third tray member **71**. Thus, sheets are stored at the third tray member **71** in a state that a predetermined process (jog sorting for each bundle) is performed thereon.

The conveying roller **29***s* is arranged to be movable in the axial direction (sheet width direction, as the case may be) as well as to be rotatable for conveying a nipped sheet in the conveying direction.

Further, the conveying roller **29***s* is connected to the shift motor M**9** for moving in the conveyance perpendicular direction and the drive motor for transmitting rotation in the conveying direction. Next, description is provided on a relation between the conveying roller **29***s* arranged at the second sheet discharging port and the abovementioned setting portion **77** with reference to FIG. **9**.

A step hs (height difference hs>0) is formed between the conveying roller **29***s* and the setting face **77***b*. In the illustrated embodiment, the setting face **77***b* is arranged on the same plane as the sheet placement face **37***a* of the stack portion **37** as being adjacent thereto. The sheet placement face **37***a* is arranged below the sheet conveying path **28** as forming a step therefrom.

Accordingly, the conveying roller **29***s* and the setting face **77***b* are arranged respectively on different planes having a height difference of the step hs. Further, the axial movement area Rs (jog displacement area) of the conveying roller **29***s* and a sheet support area Sr of the setting face **77***b* are arranged to be mutually overlapped at the apparatus front side in a superimposed manner.

[Structure of First Processing Portion]

Description is provided on the respective structures of a sheet introducing mechanism, a sheet positioning mechanism, a binding processing mechanism, and the sheet bundle discharging mechanism of the first processing portion B**1**.

[Sheet Introducing Mechanism]

As illustrated in FIG. **3**, a reverse conveying mechanism **41**, **42** which performs switchback conveying on a sheet from the first sheet discharging port **35** in an opposite direction to the sheet discharging direction, a guiding mechanism (sheet guiding member **44**) which guides a sheet to the tray side, and a raking rotor **46** which guides a sheet to a leading end regulating device are arranged between the first sheet discharging port **35** and the stack portion **37**.

The reverse conveying mechanism includes a lifting-lowering roller **41** which is moved upward and downward between an operating position to be engaged with a sheet to be introduced onto the stack portion **37** and a waiting position to be separated therefrom, and a paddle rotor **42** which conveys a sheet in the direction opposite to the sheet discharging direction. The lifting-lowering roller **41** and the paddle rotor **42** are attached to a swing bracket **43**.

The swing bracket **43** is arranged at the first binding unit frame **27***a* swingably about a processing rotating shaft **36***x* (in the drawing, a sheet discharging roller shaft). A rotating shaft of the lifting-lowering roller **41** and a rotating shaft of the paddle rotor **42** are bearing-supported by the swing bracket **43**.

A lifting-lowering motor (not illustrated) is connected to the swing bracket **43**, so that the lifting-lowering roller **41** and the paddle rotor **42** which are mounted thereon are moved upward and downward between the operating position to be engaged with a sheet and the waiting position to be separated therefrom.

Further, a drive motor (not illustrated) is connected to each of the lifting-lowering roller **41** and the paddle rotor **42** to transmit driving so that the lifting-lowering roller **41** is rotated in forward and reverse directions and the paddle rotor **42** is rotated in a reverse direction (a direction opposite to the sheet discharging direction). Further, a discharging roller device **48** which is mutually pressure-contacted to the lifting-lowering roller **41** is arranged at the stack portion **37**, so that a sheet or bundle-shaped sheets is nipped and conveyed to the downstream side.

The guiding mechanism which guides a tailing end of a sheet introduced onto the stack portion **37** toward a sheet end regulating member **38** is arranged between the lifting-lowering roller **41** and the later-described raking rotor **46**. As illustrated in FIG. **3**, the guiding mechanism is structured with the sheet guiding member **44** which is moved upward and downward between a state illustrated in a dotted line and a state illustrated in a solid line. The sheet guiding member **44** retracts to the dotted-line position when a sheet is discharged from the first sheet discharging port **35**. After a tailing end of the sheet passes through the first sheet discharging port **35**, the sheet guiding member **44** guides the sheet tailing end onto the stack portion **37**.

A driving mechanism (not illustrated) is connected to the sheet guiding member **44**, so that the sheet guiding member **44** is moved upward and downward in accordance with timing of guiding the sheet tailing end from the first sheet discharging port **35** onto the stack portion **37**.

[Sheet Positioning Mechanism]

The positioning mechanism (the sheet end regulating member **38** and a side edge aligning member **39**) which positions sheets at a predetermined binding position is arranged at the stack portion **37**. As illustrated in the drawing, the positioning mechanism is structured with the sheet end regulating member **38** which performs regulation with abutting against a sheet tailing end and the side edge aligning member **39** which positions a sheet side edge at a reference position (center reference, side reference).

As illustrated in FIG. **3**, the sheet end regulating member **38** is structured with a stopper member which performs regulation with abutting against a sheet tailing end. The side edge aligning member **39** is described later with reference to FIG. **12**. In the illustrated apparatus, a sheet is discharged from the sheet conveying path **28** in center reference. Then,

in accordance with a binding mode, the sheet is positioned in center reference as well or side reference.

[Side Edge Aligning Member]

As illustrated in FIG. **12**, the side edge aligning members **39** (a right side edge aligning member **39**F and a left side edge aligning member **39**R) are protruded upward from the sheet placement face **37***a* of the stack portion **37** and arranged as a right-left pair to be mutually opposed, each having a side edge regulating face **39***x* which is engaged with a side edge of a sheet. The pair of side edge aligning members **39** are arranged at the stack portion **37** to be capable of reciprocating by a predetermined stroke.

The stroke is set in accordance with a size difference between a maximum size sheet and a minimum size sheet and an offset amount of rightward or leftward moving (offset conveying) of an aligned sheet bundle.

That is, the movement stroke of the right-left side edge aligning member **39** (the right side edge aligning member **39**F and the left side edge aligning member **39**R) is set in accordance with a movement amount for aligning different size sheets and the offset amount of the aligned sheet bundle.

As offset movement of the side edge aligning member **39** (the right side edge aligning member **39**F and the left side edge aligning member **39**R), a sheet discharged in center reference is moved by a predetermined amount rightward for right corner binding and leftward for left corner binding.

The offset movement is performed one by one (for each introduced sheet) each time when a sheet is introduced to the stack portion **37** or performed for each bundle to be bound after sheets are aligned in a bundle shape.

As illustrated in FIG. **12**, the side edge aligning member **39** is structured with the right side edge aligning member **39**F (apparatus front side) and the left side edge aligning member **39**R (apparatus rear side). Both the side edge aligning members are supported by the stack portion **37** so that the side edge regulating faces **39***x* which are engaged with side edges of a sheet are mutually moved in a closing direction or a separating direction.

Slit grooves (not illustrated) are formed to penetrate the stack portion **37**. The side edge aligning members **39** each having the side edge regulating face **39***x* which is engaged with a sheet side edge are fitted to the slits toward the upper face of the stack portion **37** in a slidable manner.

The respective side edge aligning members **39** (the right side edge aligning member **39**F and the left side edge aligning member **39**R) are slidably supported at the back face of the stack portion **37** with a plurality of aligning member guide rollers (or may be a rail member) and an aligning rack **81** is integrally arranged at each of the side edge aligning members **39**F, **39**R. Aligning motors M**1**, M**2** are connected to the right-left aligning racks **81** respectively via an aligning drive pinion **82**.

The right-left aligning motors M**1**, M**2** are structured with stepping motors. Here, positions of the right-left side edge aligning members **39**F, **39**R are detected by a position sensor (not illustrated). The respective side edge aligning members **39** (the right side edge aligning member **39**F and the left side edge aligning member **39**R) are structured to be capable of being moved by a specified movement amount in both right and left directions with reference to the detection values.

Here, without adopting the illustrated rack-and-pinion mechanism, it is also possible to adopt a structure that the side edge aligning members **39** (the right side edge aligning member **39**F and the left side edge aligning member **39**R) are fixed to a timing belt which is connected via a pulley to a motor for causing the timing belt to reciprocate to the right and left.

With the abovementioned structure, the later-described post-processing controller **95** causes the respective side edge aligning members **39** (the right side edge aligning member **39**F and the left side edge aligning member **39**R) to wait at predetermined waiting positions (positions to be mutually apart by a sheet width+α) based on sheet size information provided from the image forming apparatus A and the like.

In multi-binding operation, the aligning operation is started at timing when a tailing end of a sheet is abutted to the sheet end regulating member **38** after the sheet is introduced onto the stack portion **37**. In the aligning operation, the right-left aligning motors M**1**, M**2** are rotated in opposite directions (closing directions) by the same amount.

Sheets introduced onto the stack portion **37** are positioned with reference to the sheet center and stacked into a bundle shape. According to repetition of the introducing operation and the aligning operation of sheets, the sheets are collated and stacked into a bundle shape on the stack portion **37**. Here, a sheet having a different size is positioned in center reference as well.

In corner binding operation, the aligning operation is started at timing when a tailing end of a sheet is abutted to the sheet end regulating member **38** after the sheet is introduced onto the stack portion **37**.

In the aligning operation, a movement amount of the aligning member at the binding position side is set different from a movement amount of the aligning member at the side opposite to the binding position. The movement amounts are set so that the sheet corner is located at a previously-set binding position.

[Binding Processing Mechanism]

Binding processing mechanism portion (the first binding unit **47** and the second binding unit **51**) which performs a binding process on a sheet bundle stacked on the sheet placement face **37***a* are arranged at the stack portion **37**. Sheets are positioned at a predetermined binding position on the sheet placement face **37***a* of the stack portion **37** by the positioning mechanism (the sheet end regulating member **38** and the side edge aligning member **39**).

The binding processing mechanism portion (the first binding unit **47** and the second binding unit **51**) is structured so that the first binding unit **47** (stapling unit, as the case may be) which performs a staple binding using a staple on a sheet bundle and the second binding unit **51** (press binding unit, as the case may be) which performs an eco-binding being a non-staple binding without using a staple are arranged contrary at the binding position.

As illustrated in FIG. **2**, the binding processing mechanism portion (the first binding unit **47** and the second binding unit **51**) which performs a binding process on a tailing end of sheets introduced from the first sheet discharging port **35** is arranged at the stack portion **37**. The binding processing mechanism portion includes the stapling unit (first binding unit **47**) capable of being moved along the tailing end of the sheet placement face **37***a* of the stack portion **37** and the press binding unit (second binding unit **51**), as illustrated in FIG. **11**.

FIG. **11** illustrates the stapling unit (first binding unit **47**) and the press binding unit (second binding unit **51**) which are arranged at the stack portion **37**. In the illustrated apparatus, a binding position Cp**1** is set at a sheet corner located at the upper-left side in the drawing. The first binding unit **47** and the second binding unit **51** are moved contrary to the binding position Cp**1**.

The first binding unit **47** is moved by a predetermined stroke SL**1** along the first travel rail **53** and a second travel rail **54** which are formed at the first binding apparatus frame

27*b*. Similarly, the second binding unit **51** is moved by a predetermined stroke SL**2** along a first guide rod **56***a* and a second guide rod **56***b* (see FIG. **21**) which are arranged at the second binding apparatus frame **57**.

FIG. **12** illustrates a sheet introduced onto the stack portion **37** and movement strokes of the first binding unit **47** and second binding unit **51**. Sheets having different sizes (between the maximum size sheet and the minimum size sheet) are introduced onto the stack portion **37** in center reference.

The sheet is aligned by the right-left pair of side edge aligning members **39** (the right side edge aligning member **39**F and the left side edge aligning member **39**R) (so that sheets having different sizes are matched) with reference to a sheet side edge at the binding side (left side edge in FIG. **12**). The right-left side edge aligning members **39** (the right side edge aligning member **39**F and the left side edge aligning member **39**R) are connected respectively to the separate drive motors M**1**, M**2**. The later-described post-processing controller **95** sets movement amount of the right-left side edge aligning members **39** (the right side edge aligning member **39**F and the left side edge aligning member **39**R) in accordance with sheet sizes.

In a binding process other than the corner binding process, for example, in a later-described multi-binding process, the later-described post-processing controller **95** causes sheets to be aligned in center reference. In this case, the sheets are positioned at the binding position owing to that the right-left side edge aligning members **39** (the right side edge aligning member **39**F and the left side edge aligning member **39**R) are moved toward the sheet center from the waiting positions by respectively the same amount.

In the following, description is provided with reference to FIG. **12**. The first binding unit **47** is moved by the first stroke SL**1** between a waiting position Wp**1** (first waiting position) and the binding position Cp**1**. The second binding unit **51** is moved by the second stroke SL**2** between a waiting position Wp**2** (second waiting position) and the binding position Cp**1**.

That is, the first binding unit **47** is caused to reciprocate between the first waiting position Wp**1** and the binding position Cp**1** along the first travel rail **53** and the second travel rail **54** (guide grooves, guide rods, or the like) and the second binding unit **51** is caused to reciprocate between the second waiting position Wp**2** and the binding position Cp**1** along guide rods **56***a*, **56***b* (or may be guide grooves).

Here, the binding position Cp**1** is set at a sheet corner (hereinafter, called a set binding position). The first waiting position Wp**1** and the second waiting position Wp**2** satisfy following relations with the set binding position Cp**1**.

(1) The first waiting position Wp**1** and the second waiting position Wp**2** are located at opposite sides as sandwiching the set binding position Cp**1**.

(2) The first waiting position Wp**1** is set at the outer side of the maximum size sheet on which a binding process is to be performed on the stack portion **37** or a binding processing position being farthest from the set binding position Cp**1** on the stack portion **37** (a later-described multi-binding position Ma or the manual binding position Mp; the farthest binding position).

(3) The second waiting position Wp**2** is set at the outer side of the sheet side edge aligned at the set binding position (outside a sheet placement area of the sheet placement face).

(4) The first stroke SL**1** between the first waiting position Wp**1** and the set binding position Cp**1** is set larger (longer) than the second stroke SL**2** between the second waiting position Wp**2** and the set binding position Cp**1**.

Owing to that the first waiting position Wp**1** and the second waiting position Wp**2** are set at opposite sides with respect to the set binding position Cp**1** as described above, it is possible that one binding unit is moved in a separating direction while the other binding unit is moved in a closing direction (a contrary retracting-closing operation). Further, owing to that the first stroke SL**1** is set larger than the second stroke SL**2**, the binding processing position (the later-described multi-binding position Ma) of the first binding unit **47** can be set relatively freely. In contrast, the second binding unit **51** performs a binding process only at a previously-set binding position. According to the above, the length of the total movement stroke of the first binding unit **47** and the second binding unit **51** can be set small and the apparatus can be miniaturized.

Further, the later-described post-processing controller **95** causes the first binding unit **47** and the second binding unit **51** to move in a contrary manner so that the second binding unit **51** is located at the second waiting position Wp**2** when the first binding unit **47** is at the set binding position Cp**1** and the first binding unit **47** is located at the waiting position Wp**1** when the second binding unit **51** is at the set binding position Cp**1**.

The contrary movement of the first binding unit **47** and the second binding unit **51** is performed with a method of (1) differentiating rotational amounts in accordance with movement strokes with separate drive motors, or (2) differentiating movement amounts between the first binding unit **47** and the second binding unit **51** with the same drive source.

FIG. **13** illustrates an embodiment to differentiate movement amounts of the first binding unit **47** and the second binding unit **51** with the same drive source. A right-left pair of pulleys **58***a*, **58***b* are arranged at the first binding apparatus frame **27***b* along a movement area of the first binding unit **47** (in the right-left direction in FIG. **13**). A timing belt (toothed belt) **59** is routed between the pulleys **58***a*, **58***b* and a drive motor M**3** (stepping motor) is connected to one pulley **58***a*.

A binding movement transmitting pinion **75** is connected to the other pulley **58***b* via a differential device (transmitting device) **74**. A press rack **76** which is fixed to the second binding apparatus frame **57** of the second binding unit **51** is engaged with the binding movement transmitting pinion **75**.

The differential device **74** is structured with a gear mechanism, a slide clutch mechanism, or the combination of both the mechanisms having a transfer ratio matched to the difference between the first and second strokes SL**1**, SL**2**.

[Moving Mechanism of Stapling Unit]

As illustrated in FIG. **3**, the stapling unit (first binding unit **47**) is mounted, movably by a predetermined stroke, on the first binding apparatus frame **27***b* which is fixed to the side frame **70***f* and the side frame **70***r* as passing through the opening **70***x* formed at the side frame **70***f* of the apparatus frame **70**. The first travel rail **53** and the second travel rail **54** are arranged at the first binding apparatus frame **27***b*.

A travel rail face **53***x* is formed at the first travel rail **53** and a travel cam face **54***x* is formed at the second travel rail **54**. The travel rail face **53***x* and the travel cam face **54***x* in mutual cooperation support the stapling unit (first binding unit **47**) to be capable of reciprocating by a predetermined stroke and control an angular posture thereof.

The first travel rail **53** and the second travel rail **54** are formed so that the travel rail face **53***x* and the travel cam face **54***x* allow the stapling unit (first binding unit **47**) to reciprocate within a movement range of the moving unit (see FIG. **11**). The timing belt **59** which is connected to the drive motor M**3** is fixed to the stapling unit (first binding unit **47**).

The timing belt **59** is wound to the pair of pulleys **58***a*, **58***b* which are axially-supported by the first binding apparatus frame **27***b* and the drive motor M**3** is connected to one pulley.

According to the above, the stapling unit (first binding unit **47**) reciprocates by the stroke SL**1** with forward and reverse rotation of the drive motor M**3**.

The first binding unit **47** is engaged with the first travel rail **53** and the second travel rail **54** as described below. As illustrated in FIG. **3**, the first binding unit **47** is provided with a first rolling roller (rail fitting member) **83** which is engaged with the travel rail face **53***x* and a second rolling roller (cam follower member) **84** which is engaged with the travel cam face **54***x*.

Further, the first binding unit **47** is provided with a ball-shaped sliding roller **47***x* (at two positions in the drawing) which is engaged with a support face of the first binding apparatus frame **27***b*.

Further, a binding unit guide roller **47***y* which is engaged with a bottom face of a bottom frame is formed at the first binding unit **47** to prevent the first binding unit **47** from floating from the first binding apparatus frame **27***b*.

According to the above structure, the first binding unit **47** is supported by the first binding apparatus frame **27***b* movably via the sliding rollers **47***x* and the binding unit guide roller **47***y*. Further, the first rolling roller **83** and the second rolling roller **84** are rotated and moved along the travel rail face **53***x* and the travel cam face **54***x* respectively as following the travel rail face **53***x* and the travel cam face **54***x* respectively.

[Tray Lifting-Lowering Mechanism]

In the sheet post-processing apparatus B, the first tray member **49** is arranged at the external casing **73** as illustrated in FIG. **14**. The first tray member **49** includes a tray storing face on which sheets are stacked and is configured to be movable upward and downward (lifted and lowered) in the sheet stack direction in accordance with a stack amount of sheets stored on the tray storing face. As illustrated in FIG. **14**, tray guide rollers **85** are arranged at two positions at upper and lower sides of a base end part of the first tray member **49**. The tray guide rollers **85** are fitted to and supported by a lifting-lowering guide member **86** which is arranged at the apparatus frame **70**.

Then, the base end part of the first tray member **49** is connected to a lifting-lowering belt **87**. The lifting-lowering belt **87** is supported by an upper-lower pair of pulleys **88***a*, **88***b*. A lifting-lowering motor M**4** is connected to one pulley (drive-side pulley) **88***a*.

Thus, the first tray member **49** is moved upward and downward (lifted and lowered) in the sheet stack direction in accordance with a stack amount of sheets owing to that the lifting-lowering motor M**4** is rotationally controlled.

The lifting-lowering guide members **86** are integrally attached respectively to the side frame (front side frame) **70***f* and the side frame (rear side frame) **70***r* at opposed positions. At a tray base body **49***a* of the first tray member **49**, the tray guide rollers **85** are attached to a slide member **49***b* which is fitted to the right-left lifting-lowering guide members **86**.

According to the above, the first tray member **49** attached to the tray base body **49***a* is slidably supported along the lifting-lowering guide members **86**.

In the illustrated apparatus, as illustrated in FIG. **15**, a support frame **118***f* and a support frame **118***r* are integrally arranged respectively at the side frame **70***f* and the side frame **70***r* in the apparatus height direction as reinforcing frames to reinforce the whole apparatus frame. The lifting-lowering guide members **86** are formed respectively at the support frame **118***f* and the support frame **118***r*.

Further, a support frame **118** which includes the support frame **118***f* and the support frame **118***r* are connected to a bottom frame **70***c*. Later-described emplacement legs **120** are attached to the bottom frame **70***c*.

A positional relation between the support frame **118** and the setting portion **77** is described with reference to FIG. **16**. As illustrated in FIG. **16**, the slit-shaped opening **77***a*, the setting face **77***b*, and the position regulating face **77***c* of the setting portion **77** described above are arranged above the support frame **118**.

The slit-shaped opening **77***a* is formed at the side chassis (front cover **73***f*) which is located at the front side of the external casing **73**. The setting face **77***b* and the position regulating face **77***c* are attached to the apparatus frame (in the drawing, the side frame **70***f* at the front side).

Thus, the setting face **77***b* for manually inserting a sheet bundle from the outside and the position regulating face **77***c* are arranged above the support frame **118** which structures the apparatus frame **70**. Accordingly, a risk of being deformed is reduced even when a large external force is exerted on the whole apparatus.

Here, in a case that the stapling unit (first binding unit **47**) is arranged at the setting face **77***b* as the binding processing mechanism portion, a load of the stapling unit (first binding unit **47**) itself and a load of a moving mechanism therefor are supported by the support frame **118**.

[Caster Mechanism]

Emplacement legs **120***a* to **120***d* are attached to the apparatus frame **70** at a plurality (in the drawing, four) of positions. A rod-shaped support portion **121** and an emplacement portion **122** are arranged at each of the emplacement legs **120**. The emplacement portion **122** includes an emplacement face **122***x* which contacts to a floor face and the rod-shaped support portion **121** connects the apparatus frame **70** and the emplacement portion **122**. In the drawing, the emplacement portion **122** is structured with a rolling roller.

The bottom frame **70***c* is connected respectively to the side frame **70***f* at the front side and the side frame **70***r* at the rear side integrally with bolt connection, welding connection, or the like. The emplacement legs **120** are attached to the side frame **70***f* and the side frame **70***r* at intervals as being adjustable in height.

Next, description is provided on a structure of the emplacement leg **120** which is adjustable in height as illustrated in FIGS. **18** and **19**. As illustrated in a perspective view of FIG. **18**, the emplacement leg **120** is structured with the rod-shaped support portion **121** and the emplacement portion **122**. The emplacement portion **122** is structured with a movable wheel and the rod-shaped support portion **121** is structured with a bolt-shaped shaft member. The emplacement portion **122** is structured with a roller which is rotatable about the center of the rod-shaped support member **121** and rolled owing to friction with the emplacement face **122***x*.

Meanwhile, a nut-shaped fit portion **123** to which the emplacement leg **120** is attached is arranged at the apparatus frame **70**. In the drawing, the nut-shaped fit portion **123** is arranged at the bottom frame **70***c*.

A bolt-shaped fit portion **125** is arranged at least at a part of the rod-shaped support portion **121** to be fitted to the nut-shaped fit portion **123**. Thread grooves are formed respectively at the bolt-shaped fit portion **125** and the nut-shaped fit portion **123** for mutual screwing.

According to the above, when one of the bolt-shaped fit portion **125** and the nut-shaped fit portion **123** is rotated, the emplacement leg **120** is moved in the height direction.

The illustrated apparatus is provided with an operation dial **126** for rotating either the bolt-shaped fit portion **125** or the nut-shaped fit portion **123**, a lock device which prevents the rotation thereof, and a lock release device to allow the rotation. FIG. **19**A illustrates a locked state and FIG. **19**B illustrates a lock-released state.

In the illustrated embodiment, the operation dial **126** for rotating the bolt-shaped fit portion **125** (which is integrally formed with the rod-shaped support portion **121**) is arranged at the rod-shaped support portion **121**. A non-circular head portion **121***a* (fit ring) is integrally formed with the rod-shaped support portion **121** and the operation dial **126** is fitted to a head portion **121***a* thereof as being slidable in the axial direction. In the drawing, the head portion **121***a* and the inner shape of the operation dial **126** are fitted in octagon shapes.

Here, the inner diameter of the operation dial **126** is slightly larger than the outer diameter of the head portion **121***a*. Accordingly, the operation dial **126** is easily moved in the axial direction with respect to the head portion **121***a* and is rotated integrally with the head portion **121***a*. That is, the operation dial **126** is freely moved upward and downward in the axial direction with respect to the head portion **121***a* and is integrally rotated in the rotation direction.

Further, at the apparatus frame side, a lock portion **70***d* which prevents rotation of the operation dial **126** as being fitted thereto is arranged at the vicinity of the nut-shaped fit portion **123**. Here, the lock portion **70***d* is arranged at a position to be fitted to the operation dial **126** which is moved in a sliding manner in the axial direction.

The head portion **121***a* and the lock portion **70***d* are arranged at upper and lower sides in the axial direction of the rod-shaped support portion **121** as being mutually spaced. The operation dial **126** which is fitted to the rod-shaped support portion **121** is vertically moved between a position for being engaged with the head portion **121***a* and a position for being engaged with the lock portion **70***d*.

An urging device **129** (coil spring) which urges the operation dial **126** in one direction (in the drawing, a locking direction) is arranged between the head portion **121***a* and the operation dial **126**. FIG. **19**A illustrates a locked state (a state in which the operation dial **126** is locked to the lock portion **70***d* with the coil spring) and FIG. **19**B illustrates a lock-released state (a state in which the operation dial **126** is separated off from the lock portion **70***d*).

As is clear from the drawings, the operation dial **126** is fitted to the lock portion **70***d* formed at the apparatus frame **70** by the action of the urging device **129** such as an urging spring, so that the operation dial **126** is supported as being incapable of being rotated in the above state.

In contrast, when the operation dial **126** is separated from the lock portion **70***d* (is moved to a non-fit position) against an urging force of the urging device **129**, the operation dial **126** becomes capable of being rotated and the rotation is transmitted to the rod-shaped support portion **121** via the head portion **121***a*.

When the rod-shaped support portion **121** is rotated, the height position of the emplacement portion **122** is adjusted in height by the action of the bolt-shaped fit portion **125** arranged at the rod-shaped support portion **121** and the nut-shaped fit portion **123** at the apparatus frame side.

[Sheet Bundle Discharging Mechanism]

The sheet bundle discharging mechanism which discharges a bound sheet bundle toward the first tray member **49** at the downstream side is arranged at the stack portion **37**. For conveying a sheet bundle toward the downstream side, there have been known a method for conveying with a pair of rollers which are pressure-contacted to each other (a conveying roller device) and a conveying device for pushing out a sheet tailing end with a push-out member which is moved along a tray face from the upstream side to the downstream side. The illustrated apparatus adopts both the devices.

FIG. **20** illustrates the sheet bundle discharging mechanism. A conveying device is structured with a push-out projection (the sheet end regulating member **38** which is supported movably in the sheet discharging direction) which conveys sheets along the stack portion **37** from the binding position (processing position) located at the upstream side to the stack tray (first tray member **49**) at the downstream side, a conveying belt **38***v* which moves the push-out projection **38**, and a drive motor M**6** therefor.

The conveying roller device **48** is arranged at a discharging port of the stack portion **37** (at the boundary between the sheet placement face **37***a* and the first tray member **49**). The lifting-lowering roller **41** which is pressure-contacted to the conveying roller device **48** is arranged in the abovementioned structure as being opposed thereto. Thus, the conveying roller device **48** and the lifting-lowering roller **41** structure a discharging roller device.

As described above, the conveying device (the sheet end regulating member **38** which is supported movably in the sheet discharging direction and the conveying belt **38***v*) which pushes out a sheet bundle from the upstream side to the downstream side, the discharging roller device **48**, and the lifting-lowering roller **41** which nip and discharge the sheet bundle are arranged at the stack portion **37**.

FIG. **29**A illustrates a state that a sheet bundle is located at the binding position on the stack portion **37**. At this time, the conveying device (the sheet end regulating member **38** which is supported movably in the sheet discharging direction and the conveying belt **38***v*), the discharging roller device **48**, and the lifting-lowering roller **41** are in an operating state.

FIG. **20**B illustrates a midstream state of conveying the sheet bundle from the processing position to the downstream side. The sheet bundle is conveyed to the downstream side owing to movement of the push-out projection (the sheet end regulating member **38** which is supported movably in the sheet discharging direction) and rotation of the discharging roller device **48** and the lifting-lowering roller **41**.

FIG. **20**C illustrates a state right before the sheet bundle is discharged onto the first tray member **49** at the downstream side. On the stack portion **37**, the sheet bundle is conveyed slowly (at low speed) to the downstream side with rotation of the discharging roller device **48** and the lifting-lowering roller **41**. At that time, the push-out projection (the sheet end regulating member **38** which is supported movably in the sheet discharging direction) is kept waiting at the illustrated position as being returned to the initial position (moved rearward).

[Structure of Stapling Unit]

A structure of the stapling unit will be described with reference to FIG. **21**A. The stapling unit (first binding unit **47**) is structured as a unit separated from the sheet processing apparatus B. The stapling unit **47** includes a box-shaped staple unit frame **47***a*, a staple drive cam **47***d* which is swingably axially-supported by the unit frame **47***a*, and a drive motor M**10** which is mounted on the staple unit frame **47***a* to rotate the staple drive cam **47***d*.

A stapling head **47***b* and an anvil member **47***c* are arranged at the binding position as being mutually opposed. The stapling head **47***b* is vertically moved between a waiting position at the upper side and a stapling position at the lower side (the anvil member **26***c*) with the staple drive cam **47***d* and an urging spring (not illustrated). Further, the staple cartridge **52** is mounted on the staple unit frame **47***a* in a detachably attachable manner.

Linear blank staples are stored in the staple cartridge **52** and fed to the stapling head **47***b* by a staple feeding mechanism. A former member to fold a linear staple into a U-shape and a driver to cause the folded staple to bite into a sheet bundle are built in the stapling head **47***b*. With such a structure, the staple drive cam **47***d* is rotated by the drive motor M**10** and energy is stored in the urging spring.

When the rotational angle reaches a predetermined angle, the stapling head **47***b* is vigorously lowered toward the anvil member **47***c*. Owing to this action, a staple is caused to bite into a sheet bundle with the driver after being folded into a U-shape. Then, leading ends of the staple are folded by the anvil member **47***c*, so that the staple binding is completed.

The stapling feeding mechanism is built in between the staple cartridge **52** and the stapling head **47***b*. A sensor (empty sensor) to detect staple absence is arranged at the staple feeding mechanism. Further, a cartridge sensor (not illustrated) to detect whether or not the staple cartridge **52** is inserted is arranged at the staple unit frame **47***a*.

The illustrated staple cartridge **52** adopts a structure that belt-shaped connected staples are stacked and stored as being layered or are stored in a roll-shape in a box-shaped cartridge.

Further, a circuit to control the abovementioned sensors and a circuit board to control the drive motor M**10** are arranged at the staple unit frame **47***a* and transmit an alarm signal when the staple cartridge **52** is not mounted or the staple cartridge **52** is empty. Further, the stapling control circuit controls the drive motor M**10** to perform the stapling operation with a staple signal and transmits an operation completion signal when the stapling head **47***b* is moved to an anvil position from the waiting position and returned to the waiting position.

[Structure of Press Binding Unit (Non-Staple Binding Unit)]

A structure of the press binding unit (second binding unit **51**) will be described with reference to FIG. **21**B. As a binding device to perform a binding process on a sheet bundle without using a metal staple, there have been known a device to bind sheets by pressure-nipping a sheet bundle from front and back sides with pressurizing members which have concave-convex faces to be mutually engaged (a press binding apparatus), a device to bind sheets with folding after a slit-shaped cutout is formed at the sheet bundle (a cutout fold binding apparatus; see Japanese Patent Application Laid-open No. 2011-256008), and a device to bind sheets with a plant-derived resin string (resin string binding apparatus).

Since a sheet bundle is bound without using a metal staple, such a method is known as an eco-binding method. In the following, a press binding mechanism is described as an example thereof.

With a press binding mechanism, concave-convex faces are formed on pressurizing faces **51***b*, **51***c* which can be pressure-contacted and separated to each other and a sheet bundle is pressure-nipped from front and back sides, so that sheets are deformed and bound.

FIG. **21**B illustrates the press binding unit (second binding unit **51**). A movable frame member **51***d* is swingably axially-supported by a base frame member **51***a* and both the frame members **51***a*, **51***d* are swung about a support shaft **51***x* as being capable of being mutually pressure-contacted and separated. A follower roller **60** is arranged at the movable frame member **51***d* and is engaged with a press drive cam **68** arranged at the base frame member **51***a*.

A drive motor M**5** arranged at the base frame member **51***a* is connected to the press drive cam **68** via a deceleration mechanism. Rotation of the drive motor M**5** causes the press drive cam **68** to be rotated and the movable frame member **51***d* is swung by a cam face (eccentric cam in FIG. **21**B) thereof.

The lower pressurizing face **51***c* and the upper pressurizing face **51***b* are arranged respectively at the base frame member **51***a* and the movable frame member **51***d* as being mutually opposed. An urging spring (not illustrated) is arranged between the base frame member **51***a* and the movable frame member **51***d* to urge both the pressurizing faces **51***c*, **51***b* respectively in a direction to be separated.

As illustrated in an enlarged view of FIG. **21**B, convex stripes are formed on one of the upper pressurizing face **51***b* and the lower pressurizing face **51***c* and convex grooves to be matched therewith are formed on the other thereof. The convex stripes and the concave grooves are formed respectively into rib shapes as having predetermined length.

A sheet bundle nipped between the upper pressurizing face **51***b* and the lower pressurizing face **51***c* is intimately contacted as being deformed into a corrugation shape. A position sensor (not illustrated) is arranged at the base frame member **51***a* (press unit frame) and detects whether or not the upper pressurizing face **51***b* and the lower pressurizing face **51***c* are at the pressurization positions or separated positions.

The press binding unit (second binding unit **51**) structured as described above is movably arranged on the first and second guide rods **56***a*, **56***b* (may be grooves as well) which are arranged at the second binding apparatus frame **57** attached to the side frame **70***r* and reciprocates between the second waiting position Wp at the rear side of the side frame **70***r* and the set binding position Cp**1** for sheets stacked on the stack portion **37** located between the side frame **70***f* and the side frame **70***r*, as described above.

[Description of Control Configuration]

A control configuration of the image forming system in FIG. **1** will be described with reference to FIG. **22**. The image forming system illustrated in FIG. **22** includes a controller (hereinafter, called a main body controller) **90** for the image forming apparatus A and a controller (hereinafter, called a post-processing controller) **95** for the sheet processing apparatus B. The main body controller **90** includes a print controller **91**, a sheet feeding controller **92**, and an input portion (control panel) **93**.

Setting of an image forming mode and a post-processing mode is performed with the input portion (control panel) **93**. The image forming mode requires setting of mode setting such as color/monochrome printing and double-face/single-face printing, and image forming conditions such as a sheet size, sheet quality, the number of copies, and enlarged/reduced printing. The post-processing mode is required to be set, for example, to a printout mode, a staple binding processing mode, an eco-binding processing mode, or a jog sorting mode. Further, the illustrated apparatus includes a manual binding mode. In this mode, operation of a sheet bundle binding process is performed offline as being separate from the main body controller **90** for the image forming apparatus A.

The main body controller **90** transfers, to the post-processing controller **95**, selection of the post-processing mode

and data such as the number of sheets, the number of copies, and thickness of sheets on which images are formed. Further, the main body controller **90** transfers a job completion signal to the post-processing controller **95** each time when image forming is completed.

The post-processing mode is described in the following. In the printout mode, a sheet from the first sheet discharging port **35** is stored at the stack tray (first tray member **49**) via the stack portion **37** without a binding process performed. In this case, sheets are overlapped and stacked on the stack portion **37** and a stacked sheet bundle is discharged to the stack tray (first tray member **49**) with a jog completion signal from the main body controller **90**.

In the staple binding processing mode, sheets from the first sheet discharging port **35** are stacked and collated on the stack portion **37** and the sheet bundle is stored on the stack tray (first tray member **49**) after the binding process is performed thereon.

In this case, sheets on which images are to be formed are specified by an operator basically to have the same thickness and size. In the staple binding processing mode, any of the multi-binding, right corner binding, and left corner binding is selected and specified. The binding positions thereof are as described above.

In the jog sorting mode, sheets are divided into a group whose sheets having images formed at the image forming apparatus A are offset and stacked and a group whose sheets are stacked without being offset. An offset sheet bundle and a non-offset sheet bundle are alternately stacked on the stack tray.

[Manual Binding Mode]

The setting portion **77** where an operator sets a sheet bundle on which the binding process is to be performed is arranged at the apparatus front side of the external casing **73**. A sensor to detect a set sheet bundle is arranged at the setting face **77***b* of the setting portion **77**. With a signal from the sensor, the later-described post-processing controller **95** causes the stapling unit (first binding unit **47**) to be moved to the manual binding position (first position). Subsequently, when an operation switch is depressed by an operator, the binding process is performed.

Thus, in the manual binding mode, the post-processing controller **95** and the main body controller **90** perform controlling offline. Here, in a case that the manual binding mode and the staple binding mode are to be performed concurrently, either mode is set to have priority.

[Post-Processing Controller]

The post-processing controller **95** causes the post-processing apparatus B to operate in accordance with the post-processing mode set by the main body controller **90**. The illustrated post-processing controller **95** is structured with a control CPU (hereinafter, simply called a controller).

A ROM **96** and a RAM **97** are connected to the post-processing controller **95** (control CPU). The post-processing controller **95** performs the later-described sheet discharging operation with control programs stored in the ROM **96** and control data stored in the RAM **97**. Here, drive circuits for all the above mentioned motors are connected to the post-processing controller **95** (control CPU), so that start, stop, and forward-reverse rotation of the motors are controlled thereby.

[Sheet Discharging Operation Mode]

At the controller (main body controller **90**) for the image forming apparatus A, a post-processing (finishing) mode of image-formed sheets is set concurrently with image forming conditions. The illustrated apparatus is set to any of a staple binding mode, an eco-binding mode, a jog sorting mode, a bookbinding mode, a printout mode, an interruption mode, and a manual binding mode. In the following, operations of the respective modes will be described.

FIG. **23** is an explanatory view of operational flows to store a sheet bundle stacked on the stack portion **37** of the first processing portion B**1** at the first tray member **49** at the downstream side after the sheet bundle is staple-bound or eco-bound.

FIG. **24** is an explanatory view of a sheet discharging mode to perform jog-sorting on sheets for each bundle as being an explanatory view of operational flows to store at the third tray member **71** at the downstream side after sheets are offset in a direction perpendicular to the sheet discharging direction by a jog mechanism (roller shifting mechanism; not illustrated) of the third processing portion B**3** (sheet introducing path).

FIG. **25** is an explanatory view of the bookbinding sheet discharging mode to perform bookbinding finishing on sheets at the second processing portion B**2**.

[Staple Binding Mode and Eco-Binding Mode at First Processing Portion]

In the following, description is provided with reference to FIG. **23**. Setting of the post-processing mode is performed with the input portion **93** (control panel) or the like of the image forming apparatus A (St**01**). Based on information of the post-processing mode setting (St**02**), the post-processing controller **95** for the sheet processing apparatus B causes the second binding unit **51** to be moved when the eco-binding process is specified (St**05**) and causes the first binding unit **47** to be moved when the staple binding process is specified (St**06**).

For performing the staple binding process, the first binding unit **47** is moved to the set binding position Cp**1** and the second binding unit **51** is moved to the second waiting position Wp**2**. Here, when the binding unit position is set as a home position, the moving is performed after checking whether or not each binding unit is at the home position.

Next, the image forming apparatus A forms an image (St**07**) and the image-formed sheet is discharged (St**08**). The sheet processing apparatus B receives the image-formed sheet fed to the introducing port **26** and conveys to the downstream side (St**09**). When a punching process is specified at that time (St**10**), the post-processing controller **95** causes the sheet to temporarily stop at a punch position (St**11**).

Then, a punching unit **100** is moved in a direction perpendicular to the sheet discharging direction, the punching unit **100** is stopped after a specified punching position is determined with a sheet side edge detected by a sensor, and a punching operation is performed (St**13**).

When the punching process is not specified, the post-processing controller **95** causes the sheet to be received at the introducing port **26** and to be conveyed to the path sheet discharging port (first sheet discharging port). Then, the sheet is introduced to the stack portion **37** and positioned at a predetermined position by a positioning device (St**15**). The post-processing controller **95** causes sheets fed to the first sheet discharging port **35** to be stacked and stored on the sheet placement face **37***a* of the stack portion **37** (St**07** to St **15**).

When a jog completion signal is received from the image forming apparatus A (St**16**), the post-processing controller **95** transmits a binding process instruction signal to the first binding unit **47** or the second binding unit **51**. Accordingly, the first binding unit **47** or the second binding unit **51** performs the binding process (St**17**).

When the post-processing controller **95** receives a binding process completion signal from the first binding unit **47** or the second binding unit **51**, the bound sheet bundle is stored onto the first tray member **49** at the downstream side by the sheet bundle discharging mechanism (St**18**).

A sheet level detection sensor (not illustrated) is arranged at the first tray member **49** and detects a stacked-sheet height. When the detection value exceeds a predetermined height, the first tray member **49** is lowered (St**20**). Subsequently, the post-processing controller **95** determines whether or not a next job exists (St**21**) and the operation is completed.

Next, the jog sorting sheet discharging mode will be described with reference to FIG. **24**. When the punching process is specified (St**25**), the post-processing controller **95** causes a sheet fed to the sheet introducing port **26** of the sheet conveying path **28** (St**22** to St**24**) to temporarily stop at the punching position (St**26**). Then, the punching unit **100** is moved in a direction perpendicular to the sheet discharging direction (St**27**), the punching unit **100** is stopped after a specified punching position is determined with a sheet side edge detected by the sensor, and the punching operation is performed (St**28**).

Subsequently, the post-processing controller **95** causes a roller unit to be rotated in the sheet discharging direction (St**30**) to discharge a sheet from the third sheet conveying path **30** to the third tray member **71** (St**29**). When the sheet is at an even-numbered page (St**31**, St**32**), the roller unit which is arranged at the second sheet discharging port is stopped (St**33**) and the sheet is moved in a nipped state in a direction perpendicular to the sheet discharging direction by a previously-set offset amount (St**34**).

Then, the post-processing controller **95** causes the roller unit which is arranged at the second sheet discharging port to be rotated again in the sheet discharging direction (St**35**). At that time, the first path switching device **33** is shifted to guide the sheet from the introducing port **26** to the third sheet conveying path **30** and the sheet is stacked on the third tray member **71** (St**36**).

Next, the bookbinding sheet discharging mode will be described with reference to FIG. **25**. Similarly to the above, an image-formed sheet is introduced to the sheet conveying path **28**. The sheet is guided from the introducing port **26** to the second processing portion B**2** and is abutted and regulated by the leading end regulating stopper **67**. At that time, the post-processing controller **95**, in advance, receives information of sheet size in the sheet discharging direction and sets a position of the leading end regulating stopper **67**.

With a job completion signal from the image forming apparatus A, the center-binding stapling unit **63** is moved to the sheet center and performs a binding process on sheets stacked at the second processing portion B**2**. When the binding process is completed at one position or two positions, the sheet bundle is moved to a folding position and a pair of folding rollers **64** are rotated. At the time when a folding blade **65** is advanced in the folding direction and the pair of folding rollers **64** are rotated by a predetermined amount, the folding blade **65** is retracted. Then, the folded-sheets are discharged in the sheet discharging direction by a sheet folding discharging roller **69** at the downstream side and stored at the second tray member **61**.

What is claimed is:

1. A sheet processing apparatus, comprising:

a conveying portion which conveys sheets;

a stack portion on which sheets conveyed in a conveying direction by the conveying portion are stacked;

a first regulator which is configured to regulate a position of a sheet bundle stacked on the stack portion, the first regulator regulating the position of the sheet bundle in a crossing direction crossing the conveying direction by contacting an end of the sheet bundle in the crossing direction;

a second regulator which is configured to regulate a position of a sheet bundle, stacked on the stack portion, in the conveying direction by contacting an end of the sheet bundle in the conveying direction;

a first binder which is configured to move in the crossing direction so that the first binder moves from a first side of the sheet processing apparatus to a second side of the sheet processing apparatus and moves from the second side to the first side, and which is configured to bind a corner portion of a sheet bundle by a staple at a first position, the corner portion including an end where the first regulator has contacted and an end where the second regulator has contacted, the corner portion being on the first side of the sheet bundle, the first binder being configured to bind a corner portion of a sheet bundle, which is stacked on the stack portion, by a staple at a second position, the corner portion including an end which is on the second side of the sheet bundle which is stacked on the stack portion and an end where the second regulator has contacted, the corner portion being on the second side of the sheet bundle;

a second binder which is configured to bind a corner portion of a sheet bundle without a staple, the corner portion including an end where the first regulator has contacted and an end where the second regulator has contacted, the corner portion being on the first side of the sheet bundle, the second binder including a first pressurizing portion and a second pressurizing portion, the first pressurizing portion and the second pressurizing portion sandwiching the sheet bundle in a case that the second binder binds the sheet bundle, the first pressurizing portion and the second pressurizing portion being configured to move integrally, the second binder being movable on the first side of the first binder located at the second position, the second binder not being movable on the second side of the first binder located at the second position; and

a controller configured to move the first binder in the crossing direction, the controller being configured to bind a corner portion of a sheet bundle by the first binder, the corner portion including an end where the first regulator has contacted and an end where the second regulator has contacted, the corner portion being on the first side of the sheet bundle,

the controller being configured to bind a corner portion of a sheet bundle, which is stacked on the stack portion, by the first binder, the corner portion including an end which is on the second side of the sheet bundle which is stacked on the stack portion and an end where the second regulator has contacted, the corner portion being on the second side of the sheet bundle,

the controller being configured to bind a corner portion of a sheet bundle without a staple by the second binder, the corner portion including an end where the first regulator has contacted and an end where the second regulator has contacted, the corner portion being on the first side of the sheet bundle,

the controller being configured to move the second binder on the first side of the first binder located at the second

position, the controller not moving the second binder on the second side of the first binder located at the second position.

2. The sheet processing apparatus according to claim **1**, wherein in a case that the first binder binds a corner portion of a sheet bundle, the controller causes the second binder to be positioned on the first side relative to the first binder, wherein the corner portion includes an end where the first regulator has contacted and an end where the second regulator has contacted, and the corner portion is on the first side of the sheet bundle, wherein in a case that the second binder binds a corner portion of a sheet bundle, the controller causes the first binder to be positioned on the second side relative to the second binder, wherein the corner portion includes an end where the first regulator has contacted and an end where the second regulator has contacted, and the corner portion is on the first side of the sheet bundle.

3. The sheet processing apparatus according to claim **2**, wherein in a case that the second binder binds a corner portion of a sheet bundle, the controller causes the first binder to be positioned on the second side relative to an end of the second side of the sheet bundle, wherein the corner portion includes an end where the first regulator has contacted and an end where the second regulator has contacted, and the corner portion is on the first side of the sheet bundle.

4. The sheet processing apparatus according to claim **2**, wherein in a case that the first binder binds a corner portion of a sheet bundle, the controller causes the second binder to be positioned on the first side relative to an end of the first side of the sheet bundle, and on the first side relative to the first binder, wherein the corner portion includes an end where the first regulator has contacted and an end where the second regulator has contacted, and the corner portion is on the first side of the sheet bundle.

5. The sheet processing apparatus according to claim **1**, wherein the second regulator regulates a sheet bundle in the conveying direction by contacting an end of the sheet bundle at an upstream side in the conveying direction.

6. The sheet processing apparatus according to claim **1**, further comprising:

a discharge portion which is configured to discharge a sheet bundle on the stack portion from the stack portion by moving the sheet bundle in the conveying direction.

7. The sheet processing apparatus according to claim **1**, wherein the first binder binds an end, where the second regulator has contacted, of a sheet bundle at several positions in the crossing direction.

8. An image forming apparatus, comprising:

an image forming device which forms an image on a sheet,

a stack portion on which sheets conveyed in a conveying direction from the image forming device are stacked;

a first regulator which is configured to regulate a position of a sheet bundle stacked on the stack portion, the first regulator regulating the position of the sheet bundle in a crossing direction crossing the conveying direction by contacting an end of the sheet bundle in the crossing direction;

a second regulator which is configured to regulate a position of a sheet bundle, stacked on the stack portion, in the conveying direction by contacting an end of the sheet bundle in the conveying direction;

a first binder which is configured to move in the crossing direction so that the first binder moves from a first side of the sheet processing apparatus to a second side of the sheet processing apparatus and moves from the second side to the first side, and which is configured to bind a corner portion of a sheet bundle by a staple at a first position, the corner portion including an end where the first regulator has contacted and an end where the second regulator has contacted, the corner portion being on the first side of the sheet bundle, the first binder being configured to bind a corner portion of a sheet bundle, which is stacked on the stack portion, by a staple at a second position, the corner portion including an end which is on the second side of the sheet bundle which is stacked on the stack portion and an end where the second regulator has contacted, the corner portion being on the second side of the sheet bundle;

a second binder which is configured to bind a corner portion of a sheet bundle without a staple, the corner portion including an end where the first regulator has contacted and an end where the second regulator has contacted, the corner portion being on the first side of the sheet bundle, the second binder including a first pressurizing portion and a second pressurizing portion, the first pressurizing portion and the second pressurizing portion sandwiching the sheet bundle in a case that the second binder binds the sheet bundle, the first pressurizing portion and the second pressurizing portion being configured to move integrally, the second binder being movable on the first side of the first binder located at the second position, the second binder not being movable on the second side of the first binder located at the second position; and

a controller configured to move the first binder in the crossing direction, the controller being configured to bind a corner portion of a sheet bundle by the first binder, the corner portion including an end where the first regulator has contacted and an end where the second regulator has contacted, the corner portion being on the first side of the sheet bundle,

the controller being configured to bind a corner portion of a sheet bundle, which is stacked on the stack portion, by the first binder, the corner portion including an end which is on the second side of the sheet bundle which is stacked on the stack portion and an end where the second regulator has contacted, the corner portion being on the second side of the sheet bundle,

the controller being configured to bind a corner portion of a sheet bundle without a staple by the second binder, the corner portion including an end where the first regulator has contacted and an end where the second regulator has contacted, the corner portion being on the first side of the sheet bundle,

the controller being configured to move the second binder on the first side of the first binder located at the second position, the controller not moving the second binder on the second side of the first binder located at the second position.

9. An image forming system, comprising:

an image forming apparatus which forms an image on a sheet; and

a processing apparatus which processes a sheet fed from the image forming apparatus,

wherein the processing apparatus is the sheet processing apparatus according to claim **1**.

* * * * *