E. H. MESSITER.

DUPLEX WEIGHER.

APPLICATION FILED FEB. 7, 1914.

1,163,678.

Patented Dec. 14, 1915.

2 SHEETS—SHEET 1.

Fig. 1.

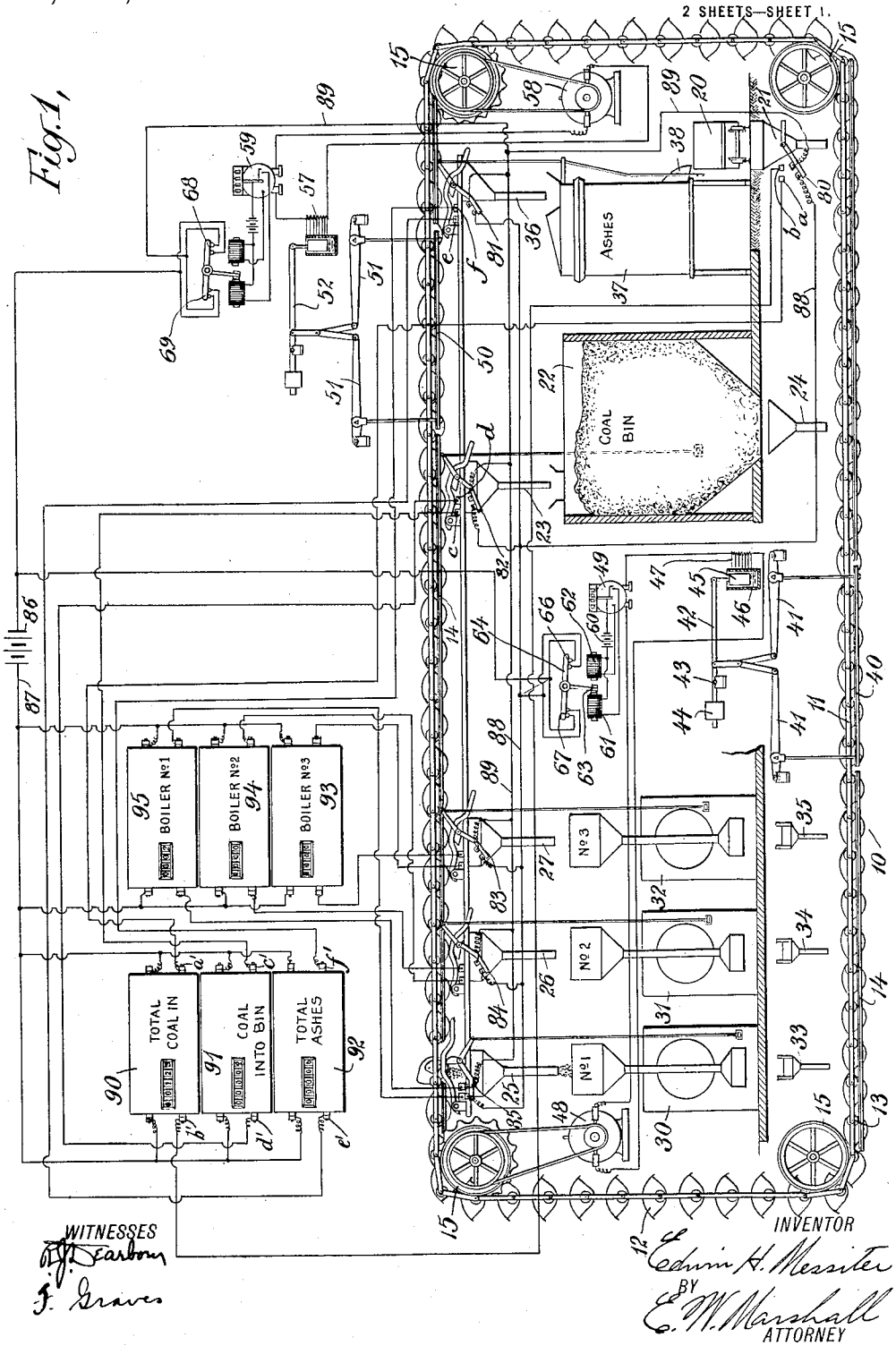

WITNESSES

F. Farbom

F. Graves

INVENTOR

Edwin H. Messiter

BY

E. W. Marshall

ATTORNEY

E. H. MESSITER.

DUPLEX WEIGHER.

APPLICATION FILED FEB. 7, 1914.

1,163,678. Patented Dec. 14, 1915.

2 SHEETS—SHEET 2.

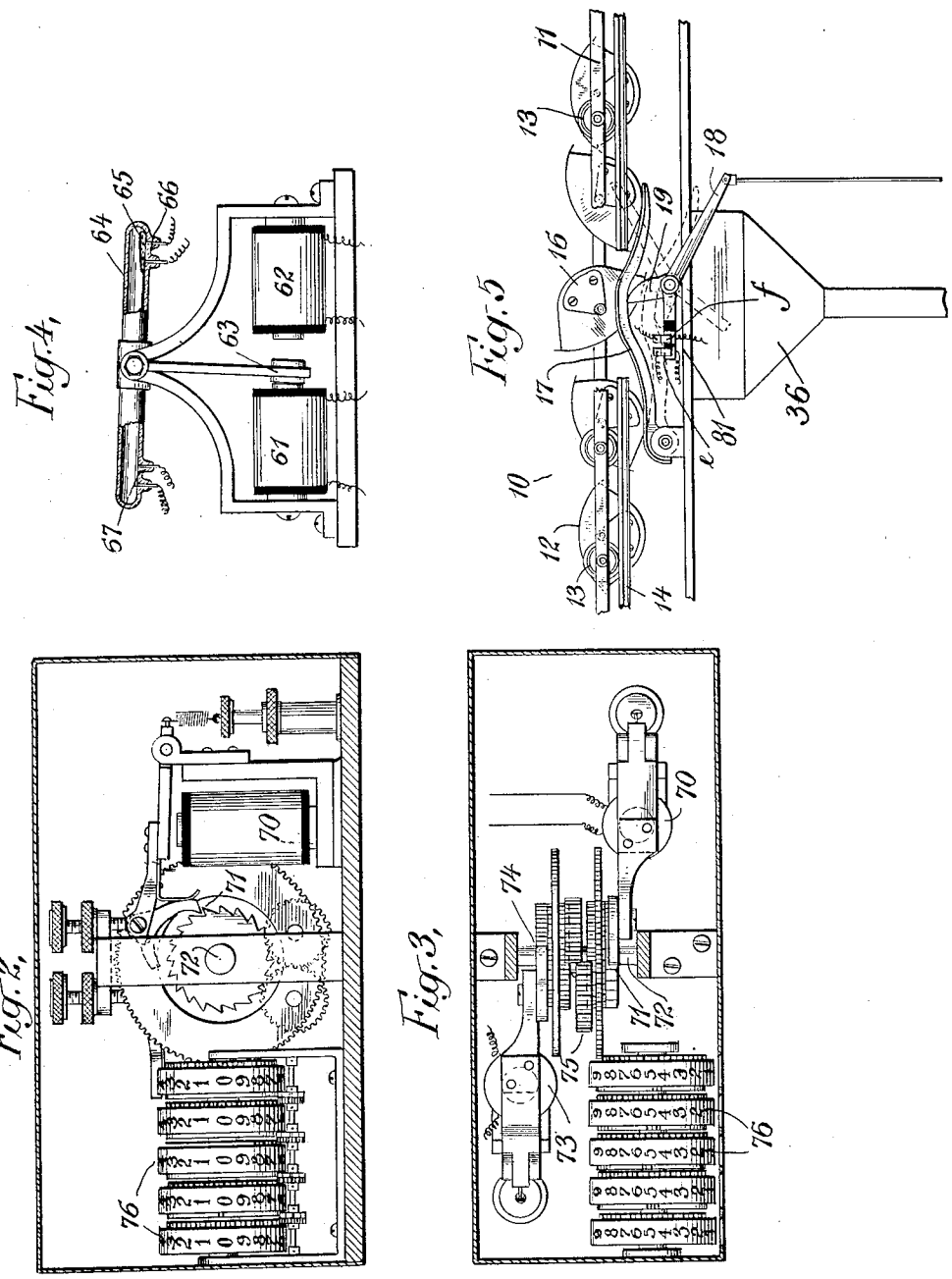

WITNESSES

R. J. Earbour

J. Gray

INVENTOR

Edwin H. Messiter

BY

E. W. Marshall

ATTORNEY

COLUMBIA PLANOGRAPH CO., WASHINGTON, D. C.

UNITED STATES PATENT OFFICE.

EDWIN H. MESSITER, OF BROOKLYN, NEW YORK, ASSIGNOR TO ELECTRIC WEIGHING COMPANY, OF NEW YORK, N. Y., A CORPORATION OF NEW YORK.

DUPLEX WEIGHER.

1,163,678. Specification of Letters Patent. Patented Dec. 14, 1915.

Application filed February 7, 1914. Serial No. 817,109.

To all whom it may concern:

Be it known that I, EDWIN H. MESSITER, a citizen of the United States, and a resident of Brooklyn, county of Kings, and State of New York, have invented certain new and useful Improvements in Duplex Weighers, of which the following is a specification, reference being had to the accompanying drawings, forming a part thereof.

My invention relates to weighers for traveling conveyers and its object is to provide a simple arrangement by means of which the weight of the load carried by such a conveyer may be measured accurately.

More specifically the invention relates to the provision of weighing apparatus at two parts of an endless conveyer with means for obtaining a common reading therefrom.

Other objects will appear in the following specification in which I will describe my invention and the novel features of which I will set forth in claims.

Referring to the drawings, Figure 1 is a diagrammatic representation of an endless traveling conveyer of the bucket type with my invention applied thereto. Figs. 2 and 3 are respectively a front elevation and a plan view of an electric magnetically actuated register which may be used in carrying out the invention. In Fig. 4 is shown in elevation, partly in section, a relay such as may be used for controlling the circuits of the registers. Fig. 5 shows a bucket tripping cam lever and circuit closer which may be used in such an installation as that shown in Fig. 1.

Like characters of reference designate corresponding parts in all the figures.

10 designates an endless conveyer of the bucket type which comprises a plurality of links 11 pivotally supporting the buckets 12, rollers 13, supporting rails 14 and pulleys 15, at least one of which is power driven to move the conveyer.

On the sides of the buckets are cams 16 and at suitable intervals pivoted cam levers 17 are provided for the purpose of tilting the buckets by engagement with the cams thereon to cause the buckets to successively discharge their contents at desired points. These cam levers may be raised into active position by pulling down a pivoted arm 18, a part 19 of which is adapted to raise the cam lever and to maintain it in its raised or actuating position.

A coal car is shown at 20 the contents of which may be dumped through a chute 21 into the conveyer buckets.

22 is a coal storage bin into which coal from the conveyer may be dumped through a chute 23 or from which coal may be discharged onto the conveyer through a chute 24.

A bank of three boilers is shown in Fig. 1 at 30, 31 and 32 above which are chutes 25, 26 and 27 through which coal from the conveyer may be discharged into their respective boilers. Below the boilers are ash chutes 33, 34, 35 through which ashes from the boilers may be discharged onto the conveyer.

36 is another chute through which ashes from the conveyer may be discharged into an ash receptacle 37. A discharge spout 38 is provided near the base of this receptacle through which ashes may be discharged into a car standing in the position of the car 20.

The foregoing brief description outlines such a conveyer arrangement as might be installed in a power plant. It has been selected as illustrative of an installation with which the present invention may be used advantageously.

According to the embodiment of my invention which is shown in the drawings, a part of the track 14 is removed and replaced by a track section 40 which is suspended from pivoted levers 41. The free ends of these levers are connected with a scale beam 42 which is fulcrumed at 43 and on one part of which is a balance weight 44. From the other end of the scale beam is suspended a plunger 45 which is adapted to be depressed into a receptacle 46 by the weight of the buckets 12 and the material, if any, therein as they pass over the rail section 40. The movement of the plunger causes the height of a body of mercury to change to vary the amount of a resistance 47 in proportion to the load on the track section 40.

A dynamo 48 is arranged to be driven at a speed proportional to that of the conveyer, as for example being driven from a pulley on the shaft of one of the conveyer

pulleys 15. This dynamo is so wound that the voltage it generates is proportional to the rate of speed of the conveyer. The resistance 47 and an electric meter 49 are in a circuit which is closed across the armature of the dynamo. This arrangement is such that the meter is actuated at a rate proportional to the weight of the buckets on the rail section 40, and in proportion to the rate at which the buckets move across the rail section. This then gives a convenient and accurate means of weighing the conveyer at one part of its path of travel.

So far as the present invention is concerned, any other desired form of continuous weigher mechanism may be used, but I have shown and described the kind of weigher which I actually use as I believe it to be the most accurate and most convenient arrangement available for this purpose.

At another part of the path of travel of the conveyer, a part of its supporting track 14 is replaced by a track section 50 suspended from pivoted levers 51 which are connected with a scale beam 52 which is arranged in the manner already described to vary the amount of a resistance 57 in circuit with a dynamo 58 and a meter 59. This meter is arranged as is the other one, to be actuated in proportion to the weight of the load which it measures and in proportion to the rate of movement of the load, which in this case is the weight of the buckets and the material, if any, in them, as they pass over the rail section 50.

The electric meters shown are of the rotary type and each may if desired, be provided with a register. In the specific embodiment of my invention which is shown, each meter is arranged momentarily to close two local circuits during each of its revolutions. Associated with meter 49 is a battery 60 one terminal of which is connected with the shaft of the meter and its other terminal is connected with the windings of two electromagnets 61, 62. These magnet windings are also connected with stationary contacts within the meter and the meter mechanism is such that during a revolution of its shaft a circuit is momentarily closed through winding of magnet 61 and another circuit is momentarily closed through winding of magnet 62 so that these magnets are alternately energized.

When magnet 61 is energized it pulls its armature 63 to the left. This is connected as shown in Fig. 4 to tilt a vacuum tube 64 into such a position as to cause a small body of mercury 65 to move to the right and to close a circuit between two terminals at 66. When magnet 62 is energized the armature 63 is pulled over to the right. This tilts the mercury tube the opposite way, breaks the connection between the terminals 66 and makes a connection between terminals 67 near the other end of the tube. Similar contacts at 68 and 69 are alternately connected and disconnected by a similar relay arrangement actuated by the meter 59.

In the system which is illustrated in Fig. 1, a number of registers are shown in outline which are illustrated more in detail in Figs. 2 and 3. Each of these registers comprises an electro-magnet 70 which through its armature and a pawl and ratchet mechanism 71 is adapted to turn a shaft 72 in a clockwise direction; and an electromagnet 73 which through a pawl and ratchet mechanism 74 is adapted to turn the shaft 72 in the opposite direction. The shaft 72 is connected by a train of gearing 75 to turn a set of register disks 76 intermittently in a well known manner.

According to my invention, the two weighers actuate any one register in opposite directions. Thus if the weight passing over track section 40 is equal to the weight passing over track section 50 any one of the registers which is connected with the two weighers will be equally actuated in opposite directions, so that the positions of its disks 76 will not change. But if the weight passing over the track section 40 is less than that passing over track section 50, the difference between these weights will be registered on the instrument which is connected with the two weighers.

A switch 80 is provided at the chute 21; another 81 at the bucket trip over the ash bin; and others 82, 83, 84 and 85 at the trips above the coal bin and above boilers Nos. 3, 2 and 1 respectively. One terminal 87 of a battery 86 is connected with one of the terminals of each of the register actuating magnets such as 70 and 73. The other terminal of this battery is connected with one of the relay contacts at 66, 67 and 68, 69. The other relay contacts at 66, 67 are connected by conductors 88 with the lower left hand contact of each of the switches 80, 81, 82, 83, 84 and 85. The other relay contacts at 68, 69 are connected by conductors 89 with the lower right hand contact of each of these switches.

If it is desired to measure the amount of coal delivered from the car 20, the switch 80 is closed. This switch comprises a contact a which is connected at a' with one of the actuating magnets in register 90, and is adapted to coöperate with the lower left hand contact of the switch; and another contact b which is connected at b' with the other actuating magnet of the same register.

The loaded buckets passing over track section 50 will by the mechanisms which have been described, cause intermittent energization of the right hand actuating magnet of register 90 at a frequency proportional to

the weight of the loaded buckets and to the rate of their movement over the track section 50. This magnet will actuate the register disks in a positive direction—that is in a direction to cause these disks to show an increasing figure.

Assuming that the coal has been dumped from the buckets before they reach the track section 40,—which would always be the case in the normal operation of the conveyer plant,—the weight of the buckets and of any odd pieces of coal which may have remained in them will cause intermittent energization of the actuating magnet 73 of register 90 which is a negative direction or against the operation of magnet 70. The effect of the magnet 70 will be to register the gross weight of the buckets and the coal in them, and the effect of the magnet 73 will be to deduct the actual tare, that is the weight of the buckets and their connected parts and the weight of any undelivered coal in them. Consequently, the register 90 will register accurately the total amount of coal taken into the plant.

When the coal is discharged into the bin 22, the switch 82 is closed, and its contacts at c and d, connected at c' and d' with the actuating magnets in register 91 and operating in the manner before described will cause this register to show the weight of coal delivered to the coal bin. In a similar manner, switch 83 which is connected with register 93 will cause the latter to register the weight of coal delivered to boiler No. 3; switch 84 and register 94 will cause the weight of coal delivered to boiler No. 2 to be shown, and switch 85 and register 95 will register the weight of coal delivered to boiler No. 1.

I have also shown a means for weighing the ashes as they are delivered through chutes 33, 34 or 35 into the conveyer buckets and dumped therefrom through chute 36 into the ash bin 37. In this case the switch 81 is closed and its contact e is connected at e' with the left hand actuating magnet 73 of register 92 instead of to the right hand actuating magnet, as in the other cases, and its contact f is connected with the right hand actuating magnet. This is because in this case the weight passing over the track section 40 is the gross and that passing over track section 50 is the tare.

The plant illustrated to show the operation of my invention is selected only as an example of one of the uses to which it may be put and one in which its advantages are apparent. But it is illustrative only as the invention is limited only by the restrictions in the claims, and is obviously applicable to other kinds of plants and other uses.

What I claim is:

1. In combination with an endless conveyer, two mechanically independent weighers in different parts thereof, and means for obtaining a resultant reading from said weighers.

2. In combination with an endless conveyer, two mechanically independent weighers in different parts thereof, and a registering instrument connected with and actuated by both of said weighers.

3. In combination with an endless conveyer, two weighers in different parts thereof, and a registering instrument connected with both of the weighers and arranged to be actuated in one direction by one of the weighers and in the opposite direction by the other weigher.

4. In combination with an endless conveyer, two weighers in different parts thereof, two meters each arranged to be actuated by one of the weighers, and a registering instrument connected with both of said meters.

5. In combination with an endless conveyer, two weighers in different parts thereof, two meters each arranged to be actuated by one of the weighers and a plurality of registering instruments each arranged to be connected with both of said meters.

6. In combination with an endless conveyer, two weighers in different parts thereof, two meters each arranged to be actuated by one of the weighers, a plurality of registering instruments and means for connecting any of said instruments with both of the meters.

7. In combination with an endless conveyer, two weighers in different parts thereof, two meters each arranged to be actuated by one of the weighers, an electro-magnetically actuated registering instrument, circuits therefor and means actuated by the meters for controlling said circuits.

8. In combination with an endless conveyer, two weighers in different parts thereof, two meters each arranged to be actuated by one of the weighers, a plurality of electro-magnetically actuated registering instruments, circuits therefor, means actuated by the meters for controlling said circuits and switches for connecting the circuits of any desired instrument with said meter actuated means.

9. In combination with an endless conveyer, two weighers in different parts thereof, two electric meters each arranged to be actuated by one of said weighers and each comprising means for intermittently closing an electric circuit, an electro-magnetically actuated registering instrument and circuits therefor connected with both of said meters.

10. In combination with an endless conveyer, two weighers in different parts thereof, two electric meters each arranged to be actuated by one of said weighers and each comprising means for intermittently closing

an electric circuit, a plurality of electro-magnetically actuated registering instruments, circuits therefor and switches in said circuits arranged to connect the circuits of any of said instruments with both of said meters.

11. In combination with an endless conveyer, two weighing mechanisms in different parts thereof, each comprising a dynamo connected to be driven by the conveyer, a dynamo circuit, and a resistance and an electric meter in the dynamo circuit, said meters being arranged to intermittently close the electric circuits, and electro-magnetically actuated registering instruments and circuits therefor connected with both of said meters.

12. In combination with an endless conveyer, two weighing mechanisms in different parts thereof each comprising a dynamo connected to be driven by the conveyer, a dynamo circuit, and a resistance and an electric meter in the dynamo circuit, said meters being arranged to intermittently close the electric circuits, a plurality of electro-magnetically actuated registering instruments, circuits therefor, and switches in said circuits arranged to connect the circuits of any of said instruments with both of said meters.

13. In combination with an endless conveyer, a dumping device, two weighers in different parts of the conveyer, means for obtaining a resultant reading from said weighers and means connected with said dumping device for connecting said means for obtaining a reading with both of the weighers.

14. In combination with an endless conveyer, a dumping device, two weighers in different parts of the conveyer, a registering instrument arranged to be actuated in one direction by one of the weighers and in the opposite direction by the other weigher and means for actuating the dumping device and connecting said instrument with both of the weighers.

15. In combination with an endless conveyer, a dumping device, two weighers in different parts of the conveyer, a registering instrument arranged to be actuated in one direction by one of the weighers and in the opposite direction by the other weigher, and means for actuating the dumping device and connecting said instrument with both of said weighers.

16. In combination with an endless conveyer, an adjustable dumping device adapted to discharge into the conveyer, two weighers in different parts of the conveyer, an electro-magnetically actuated registering instrument oppositely responsive to the respective weighers, circuits for the instrument and a switch in said circuits operatively associated with the dumping device arranged to connect said circuits with said instrument when the dumping device is adjusted to operative position.

17. In combination with an endless conveyer, a plurality of dumping devices adapted to discharge into different parts thereof, two weighers in different parts of the conveyer, a plurality of registering instruments each arranged to be actuated by both of the weighers and means for actuating one of the dumping devices and connecting one of said instruments with both of the weighers.

18. In combination with an endless conveyer, a plurality of dumping devices adapted to discharge into different parts thereof, an actuating mechanism for each dumping device, two weighers in different parts of the conveyer, a plurality of registering instruments each arranged to be actuated by both of the weighers and means associated with said actuating mechanisms whereby when one of them is actuated, one of said instruments is connected with both of the weighers.

19. In combination with an endless conveyer, a plurality of dumping devices in different parts thereof, an actuating mechanism for each dumping device, two weighers in different parts of the conveyer, a plurality of electro-magnetically actuated registering instruments, circuits therefor, means actuated by the weighers for controlling said circuits, and switches operatively associated with said actuating mechanisms each arranged to be closed when its respective mechanism is adjusted into operative position to thereby connect the circuits of one of said instruments with both of the weighers.

20. In combination with an endless conveyer, a plurality of dumping devices in different parts thereof, an actuating mechanism for each dumping device comprising an actuating arm, a switch associated with said arm, two weighers in different parts of the conveyer, two meters each arranged to be actuated by one of the weighers and comprising means for intermittently closing an electric circuit, a plurality of electro-magnetically actuated registering instruments and circuits therefor, each of said switches being arranged to connect the circuits of one of said instruments with both of the meters when the actuating arm with which it is associated, is moved to bring its respective dumping device into operative position.

21. In combination with an endless conveyer, a plurality of dumping devices in different parts thereof, an actuating mechanism for each dumping device comprising an actuating arm, a switch associated with said arm, two weigher mechanisms in different parts of the conveyer each comprising a dynamo connected to be driven by the conveyer, a dynamo circuit, and a resistance

and an electric meter in the dynamo circuit, said meters being arranged to intermittently close the electric circuits, a plurality of electro-magnetically actuated registering instruments and circuits therefor, each of said switches being arranged to connect the circuits of one of said instruments with both of the meters when the actuating arm with which it is associated, is moved to bring its respective dumping device into operative position.

In witness whereof, I have hereunto set my hand this 2nd day of February, in the year 1914.

EDWIN H. MESSITER.

Witnesses:
R. J. DEARBORN,
GEORGE P. FALL.

Copies of this patent may be obtained for five cents each, by addressing the "Commissioner of Patents, Washington, D. C."