May 23, 1939. W. A. PREISZ 2,159,934

VANITY CASE

Filed Nov. 15, 1937 2 Sheets-Sheet 1

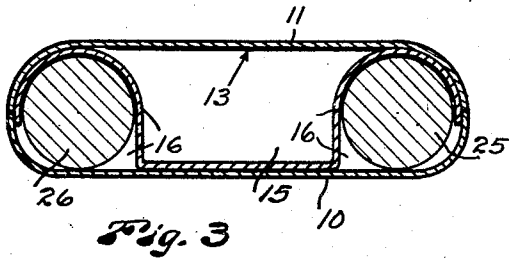

Fig. 3

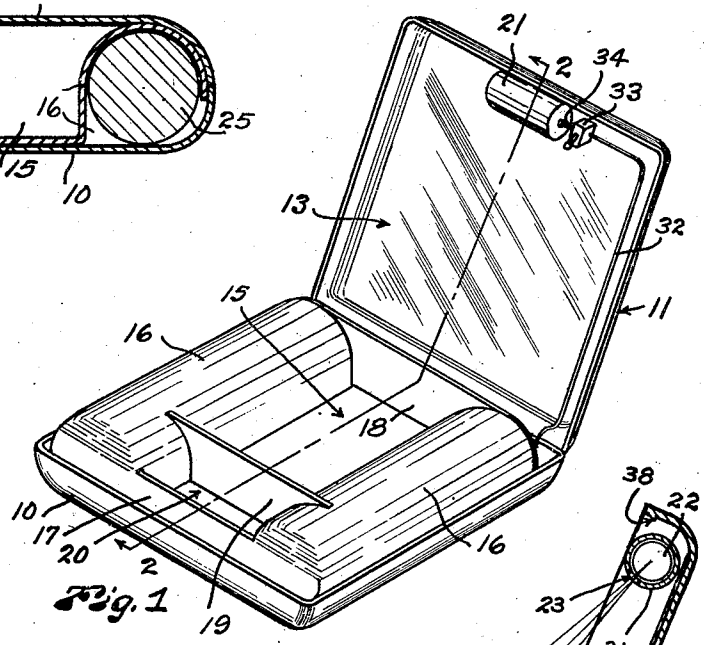

Fig. 1

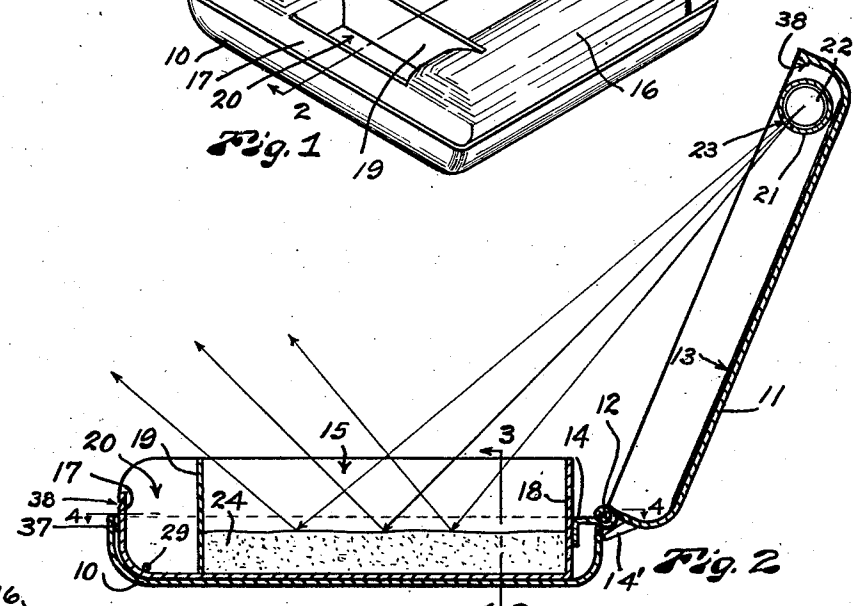

Fig. 2

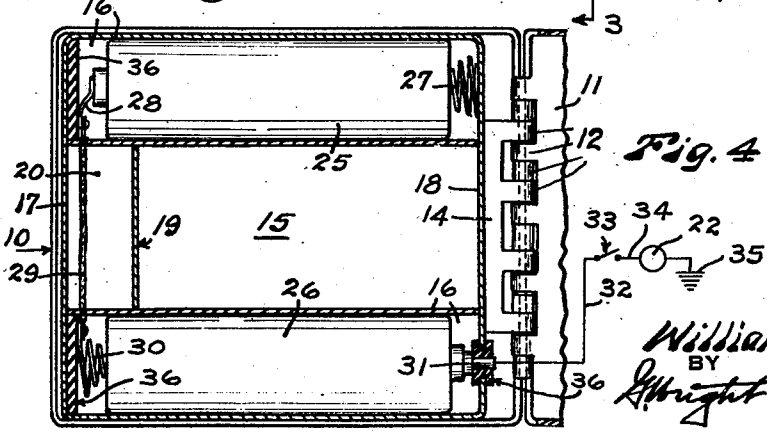

Fig. 4

INVENTOR
William A. Preisz
BY
J. Wright Arnold
ATTORNEY

May 23, 1939. W. A. PREISZ 2,159,934

VANITY CASE

Filed Nov. 15, 1937 2 Sheets-Sheet 2

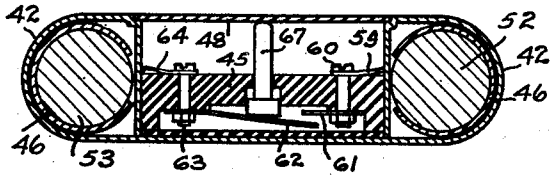

Fig. 8

Fig. 5

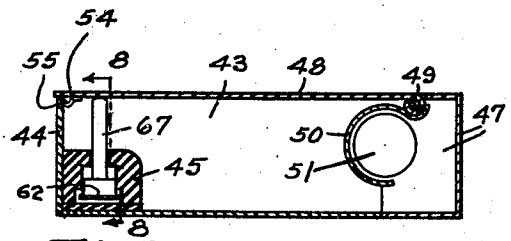

Fig. 7

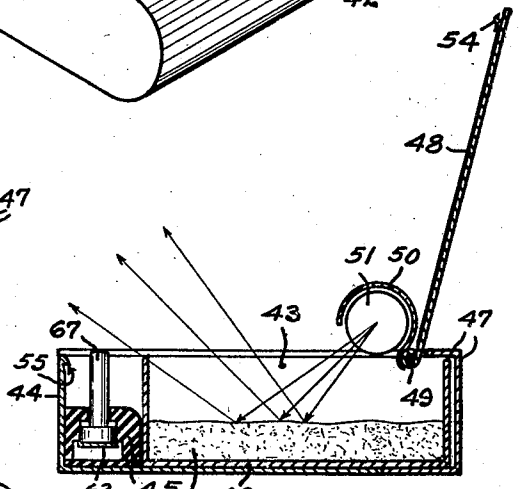

Fig. 6

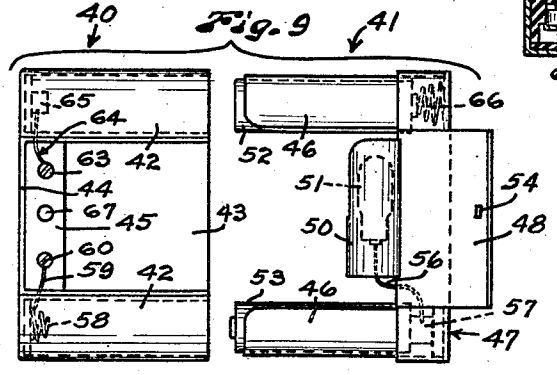

Fig. 9

INVENTOR
William A. Preisz
BY
J. Wright Arnold
ATTORNEY

Patented May 23, 1939 2,159,934

UNITED STATES PATENT OFFICE

2,159,934

VANITY CASE

William A. Preisz, Yakima, Wash., assignor of fifty per cent to Jack Newton, Seattle, Wash.

Application November 15, 1937, Serial No. 174,528

9 Claims. (Cl. 132—83)

This invention relates to a vanity case which is used in connection with the applying of cosmetics to the face of the user of the vanity case.

More particularly, this invention relates to a device which has for its object the provision of electrical illumination means so that cosmetics may be applied in darkened or poorly illuminated places.

It is a further object of the invention to provide an electrical illuminating means which will bring about a diffused light directed against the face of the user, so that the face of the user will be readily reflected from a mirror.

It is a further particular object of the invention to provide an electrical lamp bulb which may be energized by suitable means, such as small batteries, which lamp is so shielded that the lamp does not illuminate the mirror, but directs substantially all of the light therefrom towards powder in the powder reservoir of the compact at an acute angle, so that the light is diffused by and directed from the surface of the powder against the face of the user. This provides for the illumination of the face by rays which do not interfere with the vision of the user and at the same time makes the face readily subject to reflection by a mirror, even though adverse external light conditions would otherwise prevent reflection from the mirror.

It is a further object of the invention to provide a neat and attractive compact case which has provision for proper illumination of the object to be reflected by the mirror, and which at the same time is relatively economical in construction.

Another object of the invention is to provide a vanity case of this nature having battery receiving means into which batteries may be quickly and easily inserted or from which batteries may be quickly and easily removed.

The above mentioned general objects of my invention, together with others inherent in the same, are attained by the device illustrated in the following drawings, the same being preferred exemplary forms of embodiment of my invention, throughout which drawings like reference numerals indicate like parts:

Figure 1 is a perspective view of a vanity case constructed in accordance with this invention showing the same in an open position;

Fig. 2 is a sectional view substantially on broken line 2—2 of Fig. 1, showing powder in the vanity case;

Fig. 3 is a cross section substantially on broken line 3—3 of Fig. 2, but with the cover shown in closed position and the powder omitted;

Fig. 4 is a horizontal sectional view on a slightly reduced scale substantially on broken line 4—4 of Fig. 2, parts being shown in plan and certain electrical parts being shown diagrammatically;

Fig. 5 is a perspective view of a modified form of vanity case constructed in accordance with this invention, showing the cover open;

Fig. 6 is a longitudinal sectional view of the same, on a smaller scale, substantially on broken line 6—6 of Fig. 5, showing powder in the vanity case;

Fig. 7 is a view similar to Fig. 6 except that the cover is shown in closed position and the powder is omitted;

Fig. 8 is a view in cross section substantially on broken line 8—8 of Fig. 7; and

Fig. 9 is an exploded plan view on a reduced scale of the two parts of the vanity case shown in Figs. 5, 6, 7 and 8, showing said parts separated from each other.

Figs. 1, 2, 3 and 4 show one preferred form of vanity case comprising two outer housing portions 10 and 11 connected with each other by hinge means 12 so that the two portions 10 and 11 may be opened and closed relative to each other. The hinge means 12 extends along one edge of the case herein termed the rear edge. The housing portion 11 constitutes the cover portion of the housing and the inner surface 13 of said cover portion 11 is mirrored in any suitable way so that it will constitute a reflecting surface or mirror.

A stop means is preferably provided to limit the relative opening movement between the two housing portions 10 and 11. I have shown a stop member 14' on the cover portion 11 positioned to engage with the housing portion 10 but obviously the hinge means 12 may be constructed so as to provide this stop means. This stop means positions the cover 11 at a convenient angle for use of the mirror 13 when the cover is open.

A combined powder and battery holding tray or member is operatively positioned between the two housing parts 10 and 11 and is connected by hinge bracket means 14 with the hinge 12. The powder and battery holding tray embodies a centrally positioned powder receptacle 15, open at the top, and two battery receptacles 16 positioned alongside of the powder receptacle and open at the bottom. Front and rear end walls 17 and 18 extend across the front end and rear end respectively of the powder receptacle 15 and

battery receptacle 16. Preferably a partition wall 19 extends across the powder receptacle 16 a short distance rearwardly from the front wall 17 to provide another receptacle 20.

A lamp supporting means 21 is positioned within the cover member 11 near the forward or upper end thereof and is secured to said cover member. An electric lamp 22 is provided within said lamp supporting means. Preferably the lamp supporting means 21 provides a light shield for the lamp 22. Also said lamp supporting means has a light transmitting slot 23 which is positioned so that it will be below the lamp and a short distance forward of a vertical line passing through the axis of the lamp when the housing portion 10 is supported in a substantially horizontal position and the cover portion 11 is open, as shown in Fig. 2. This slot 23 permits light rays from the lamp 22 to be directed downwardly from the lamp 22 onto powder 24 in the receptacle 15 and these light rays will be reflected upwardly and outwardly in the proper direction to illuminate the face of a user of the vanity case who is holding the case in a convenient position and looking into the mirror 13. The general direction of these light rays is shown in Fig. 2. The powder, being an uneven surface, will diffuse and spread the light rays enough to light up substantially the entire face of the user, but in a general way, these light rays will be deflected by the powder at angles approximately equal to the angles at which they are incident on the powder. The lamp supporting means 21 shields the lamp 22 so that the user does not look directly at the lamp and so that the light rays from the lamp do not pass directly to the face of the user.

Two small batteries 25 and 26, positioned in the compartments 17, provide electric current for the lamp 22. One manner of completing an electric circuit including these batteries and the lamp 22 is shown, partly diagrammatically, in Fig. 4. Battery 25 has one terminal grounded on the metal vanity case by spring 27 and the other terminal connected by insulated spring 28, insulated circuit wire 29 and insulated spring 30 with a terminal of battery 26. The other terminal of battery 26 is connected by insulated contact member 31, and insulated wire 32 with manually operable switch 33. The switch 33 is connected by insulated wire 34 with one terminal of the lamp 22 and the other terminal of lamp 22 is grounded on the metal frame of the vanity case, as indicated by ground 35, thus completing the lamp circuit when switch 33 is closed. The switch 33 is preferably positioned adjacent the lamp 22, as shown in Fig. 1. The springs 28 and 30 and contact member 31 are insulated from the housing of the vanity case, as by insulating means 36. Also the wires 29, 32 and 34 and the switch 33 are insulated from the vanity case.

Suitable means are provided for holding the several parts of the vanity case in closed positions. The means herein shown is in the nature of releasable catch means 37 adapted to releasably connect the powder receptacle member and the housing member 10 together and other releasable catch means 38 adapted to releasably connect the cover member 11 and powder receptacle member together. Obviously the form of this holding means may be varied.

The cover portion 11 fits snugly over the powder receptacle when closed, thus preventing the powder from getting out of the receptacle 15, when the vanity case is inverted or roughly handled. Also when the cover member 11 is in closed position, the lamp support 21 and switch 33 will be positioned in the receptacle 20.

The batteries 25 and 26 are readily removable from or insertable in the receptacles 16 when the powder and battery tray portion is angularly moved away from the housing portion 10.

Preferably all of the external corners and edges of this vanity case are rounded off, as shown in the drawings to make said case more compact and more convenient to carry and handle and more ornamental.

Figs. 5 to 9 inclusive show an alternative form of this invention in which the vanity case is made in two relatively telescopic separable parts, shown separated in Fig. 9 and designated generally by numerals 40 and 41. The part 40 comprises two tubular battery housing portions 42, a powder receptacle portion 43, an end wall portion 44 and a switch housing portion 45. The part 41 comprises two tubular battery receiving and supporting portions 46, an end portion 47, and a cover portion 48 connected by a hinge 49 with the end portion 47. A lamp shield and support 50 is secured to the cover portion 48 adjacent the hinge 49 and a lamp 51 is provided in said lamp shield and support 50. Two batteries 52 and 53 are shown within the battery supports 46 in Fig. 9. When the two parts of the device are assembled, the battery supports 46 with the batteries therein telescope into and are positioned within the battery receiving portions 42 and the two receptacle parts 40 and 41 fit snugly together to provide a powder receptacle. The inner surface of the cover 48 is mirrored in the same manner as the cover 11. The cover 48 preferably has a catch member 54 which releasably engages with a catch portion 55 on the end wall 44 when the cover is closed. This holds the cover so that it will not open accidentally but may be easily opened by exerting a slight pull thereon.

Preferably the lighting of the lamp 51 in the vanity case shown in Figs. 5 to 9 is controlled by the opening and closing of the cover member 48. One terminal of this lamp is preferably grounded on the metal vanity case. The other terminal of said lamp is connected by an insulated wire 56, Fig. 9, with an insulated contact member 57 which is insulated from the housing and engages one terminal of the battery 52. The other terminal of battery 52 is connected by an insulated spring 58, an insulated wire 59 and an insulated binding post 60 with an insulated metal contact member 61, see also Fig. 8. The contact member 61 is positioned for engagement by a flat spring 62 which is connected by a binding post 63, wire 64 and contact member 65 with one terminal of battery 52. Parts 62, 63, 64 and 65 are all insulated from the metal parts of the vanity case. The other terminal of battery 52 is grounded on the metal part of the vanity case by a spring 66. This provides for completing the circuit through the lamp 51 and batteries 52 and 53 when the flat contact spring 62 is in contact with contact member 61. A switch operating plunger 67, preferably of insulating material, rests on the flat spring 62 and extends upwardly through housing block 45, and is adapted to be engaged by the cover 48 when said cover is closed. When the plunger 67 is pressed downwardly by the cover 48, electrical contact between flat spring 62 and contact member 61 will be broken and the circuit to lamp 51 will be maintained open. When the cover 48 is opened the resiliency of flat spring 62 will cause it to elec-

trically contact the member 61 and close the circuit to the lamp 51. The parts 57, 58, 65 and 66 are shown by dotted lines in Fig. 9.

The lamp shield 50 is open below the lamp 51 so as to allow the rays of light from the lamp 51 to be directed downwardly and forwardly onto the powder 68 in the powder receptacle by which said light rays will be somewhat diffused and reflected upwardly and outwardly, as indicated in Fig. 6, onto the face of the user of the vanity case. The shield 50 obscures the lamp so that the user is not subjected to the direct glare of the same.

Preferably the powder 68 is placed in a rectangular tray 69 and this tray is placed in the powder compartment of the vanity case. This tray 69, with powder therein, is shown in Fig. 6, but is omitted from the other figures. Obviously, if desired this tray may be dispensed with and the powder placed directly in the powder receptable 43 of the vanity case.

Obviously, changes may be made in the forms, dimensions and arrangement of the parts of my invention, without departing from the principle thereof, the above setting forth only preferred forms of embodiment.

I claim:

1. In a device of the class described, a case member; a cover member hingedly connected to the case member; a mirror carried by the cover member; a powder reservoir in said case member; and electric lamp bulb; battery and circuit means operatively connected with said lamp bulb; and shielding means operatively positioned as respects said lamp bulb to direct substantially all light toward and at an acute angle to the surface of powder in said powder reservoir, whereby light may be diffused by and directed from the surface of the powder toward the object to be reflected in the mirror.

2. In a device of the class described, a case member; a cover member hingedly connected to the case member; a mirror carried by the cover member; a powder reservoir in said case member; an electric lamp bulb carried by the cover member; battery and circuit means operatively connected with said lamp bulb; and shielding means carried by the cover member and operatively positioned as respects said lamp bulb to direct substantially all light toward and at an acute angle to the surface of powder in said powder reservoir, whereby light may be diffused by and directed from the surface of the powder toward the object to be reflected in the mirror.

3. In a device of the class described, a case member; a cover member hingedly connected to the case member; a mirror carried by the cover member; a powder reservoir in said case member; an electric lamp bulb; battery and circuit means operatively connected with said lamp bulb; electrical switch means operatively positioned relative to said case and cover member to close the electrical circuit upon the opening of the cover member and to open the electrical circuit upon the closing of the cover member; and shielding means operatively positioned as respects said lamp bulb to direct substantially all light toward and at an acute angle to the surface of powder in said powder reservoir, whereby light may be diffused by and directed from the surface of the powder toward the object to be reflected in the mirror.

4. In a device of the class described, a receptacle adapted to contain powder; a mirror connected with said receptacle; an electric lamp; and a lamp shield and reflector positioned to direct substantially all of the light rays from the lamp at a predetermined angle onto the powder in the receptacle, whereby when said light rays are deflected by the powder at an angle of diffraction substantially equal to their angle of incidence they will illuminate an object which is properly positioned to be reflected in the mirror.

5. In a device of the class described, a housing comprising a receptacle portion and a cover portion pivotally connected for relative angular movement, said receptacle portion being adapted to contain powder; a mirror carried by the cover portion; an electric lamp; and lamp shield and reflector means positioned to direct substantially all of the light rays from the lamp at a predetermined angle onto the powder in the receptacle, whereby said light rays will be deflected by the powder at an angle of diffraction substantially equal to their angle of incidence and will illuminate an object which is properly positioned to be reflected in the mirror.

6. In a device of the class described, a vanity case receptacle adapted to contain powder; a mirror connected with said receptacle adjustable to a correct position to reflect an image of the face of a person holding the receptacle; an electric lamp; electrical supply means connected with said lamp; and means positioned to shield said lamp and direct substantially all of the light therefrom onto the powder in the receptacle at an angle of incidence which will cause said light to be deflected by the powder onto the face of the person properly positioned to be reflected in the mirror.

7. In a device of the class described, a vanity case housing comprising a receptacle portion and a cover portion pivotally connected together for relative angular movement; a tray member positioned between said receptacle portion and said cover portion and pivotally connected therewith, said tray member having a centrally positioned powder compartment with an open side directed toward said cover portion and having two battery compartments positioned alongside of said powder compartment with open sides directed toward said receptacle portion; a mirror in said cover portion; and an electric lamp carried by said cover portion.

8. In a device of the class described, a vanity case housing comprising a receptacle portion and a cover portion pivotally connected together for relative angular movement; a tray member positioned between said receptacle portion and said cover portion and pivotally connected therewith, said tray member having a centrally positioned powder compartment with an open side directed toward said cover portion and having two battery compartments positioned alongside of said powder compartment with open sides directed toward said receptacle portion; a mirror carried by said cover portion; an electric lamp carried by said cover portion; batteries in said battery compartments; and electric circuit means operatively connecting said batteries and said lamp.

9. In a device of the class described, a vanity case housing comprising a receptacle portion and a cover portion pivotally connected together for relative angular movement; a tray member positioned between said receptacle portion and said cover portion and pivotally connected therewith, said tray member having a centrally positioned powder compartment with an open side directed toward said cover portion and having two battery compartments positioned alongside of said powder

compartment with open sides directed toward said receptacle portion; a mirror carried by said cover portion; an electric lamp carried by said cover portion; shield and reflector means positioned to shield said lamp and direct substantially all of the light therefrom onto powder in said powder receptacle at a predetermined angle which will cause said light to be deflected onto an object properly positioned to be reflected in said mirror; batteries in said battery compartments; and electric circuit means operatively connecting said batteries and said lamp.

WILLIAM A. PREISZ.