Oct. 18, 1949. W. E. STILWELL, JR 2,484,863

OVERLOAD PROTECTIVE DEVICE

Filed Aug. 12, 1943 2 Sheets-Sheet 1

Fig. 1.

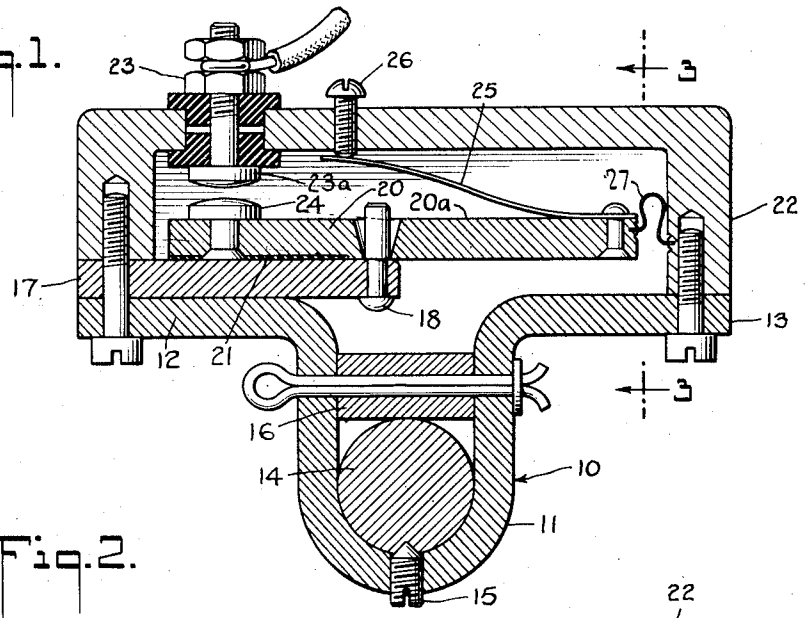

Fig. 2.

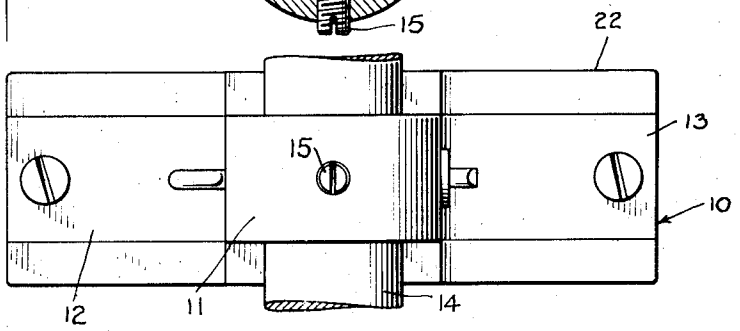

Fig. 3.

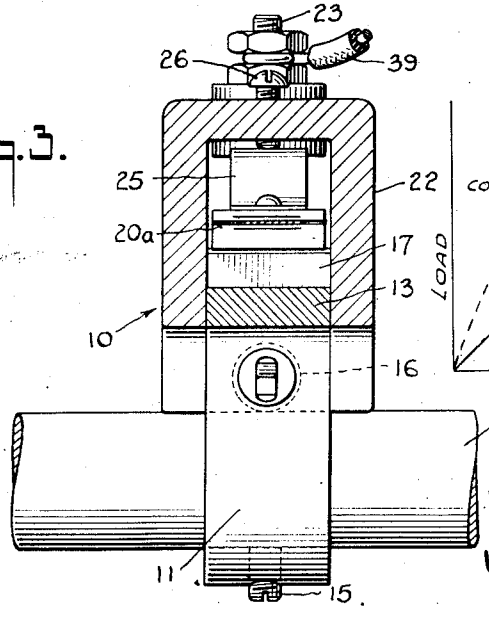

Fig. 7.

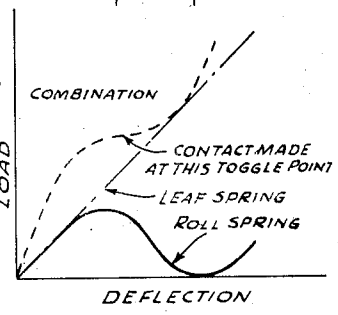

INVENTOR

WILLIAM E. STILWELL, JR.

BY Harry J. Locke

HIS ATTORNEY

Oct. 18, 1949. W. E. STILWELL, JR 2,484,863

OVERLOAD PROTECTIVE DEVICE

Filed Aug. 12, 1943 2 Sheets-Sheet 2

Fig. 4.

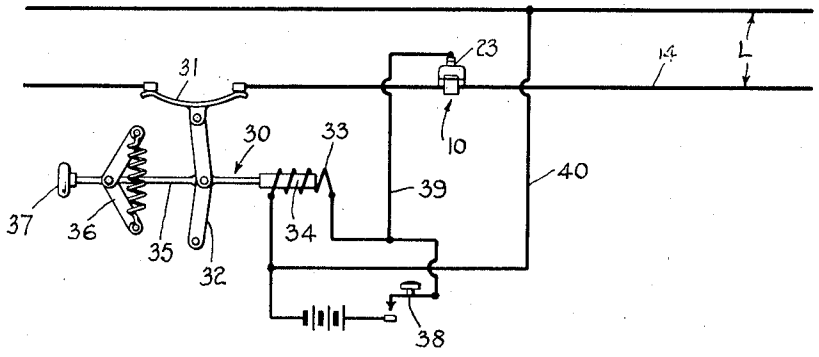

Fig. 5.

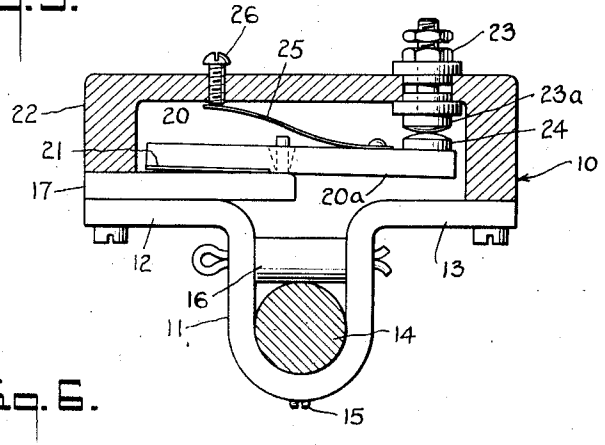

Fig. 6.

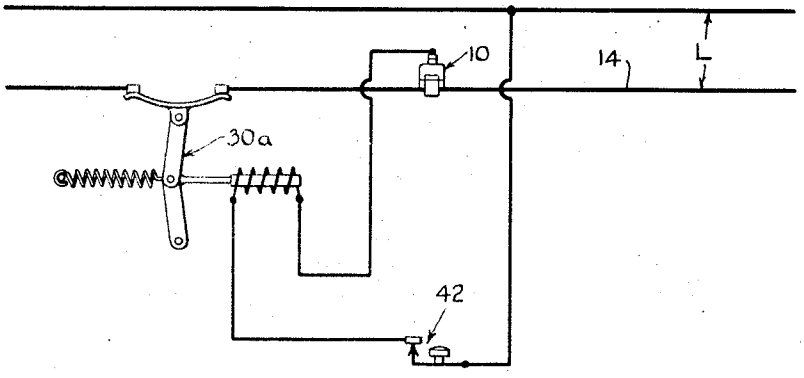

INVENTOR
WILLIAM E. STILWELL, JR
BY Henry J. Lucke
HIS ATTORNEY

Patented Oct. 18, 1949

2,484,863

UNITED STATES PATENT OFFICE

2,484,863

OVERLOAD PROTECTIVE DEVICE

William E. Stilwell, Jr., Cincinnati, Ohio, assignor to John B. Pierce Foundation, New York, N. Y., a corporation of New York

Application August 12, 1943, Serial No. 498,273

2 Claims. (Cl. 200—87)

1

This invention relates to overload protective devices and particularly to overload devices actuated by increase in magnetic flux about an electricity conductor when the current carried by such conductor is increased.

An object of the invention is to provide means responsive to predetermined overload conditions to actuate a circuit breaker, whereby apparatus may be protected against the effects of overloads.

It is an object of the invention to provide a magnetic overload circuit breaker which may be attached to a conductor of the circuit to be protected, at any convenient location, without disconnecting or breaking said conductor.

It is an object of the invention to provide a circuit breaker which is of simple, inexpensive construction, and may be manufactured to small size and light weight.

According to preferred embodiments of the invention my improved circuit breaker comprises a substantially U-shaped strap or bar of soft iron or like magnetically responsive material, said strap having a body member defining an aperture through which the conductor of the circuit to be protected may extend, and wing portions extending respectively in opposite directions, from each of the legs of the U. When exposed to magnetic flux, said body becomes a magnet, each of the wing portions forming a pole thereof. Secured to one of the poles, and extending in the direction of the other, is a pole-piece extension; and upon said extension there is pivoted a soft-iron armature having a free end extending beyond the end of said pole-piece extension to overlie the opposite pole of the strap in spaced relationship therewith.

A non-magnetic housing encloses the pole-piece extension and its associated armature, and a spring, with means for adjusting the tension thereof, urges the armature in the direction of the pole-piece extension. Under normal current conditions within the circuit, the induced magnetism is not sufficient to overcome the air gap between the armature and the magnetic pole of the body which it overlies; under abnormal, i. e., high current in the conductor, the increased magnetic effect overcomes the magnetic reluctance of the air gap and the armature tilts toward the pole of the body member.

Such movement of the armature may be employed to close, or open if desired, the circuit of a magnetic switch serving as the circuit breaker in the controlled circuit.

In the accompanying drawings:

Fig. 1 is a transverse sectional elevation taken through a circuit breaker of a preferred embodiment of the invention, said figure showing in cross section an electricity conductor of the circuit to be protected;

2

Fig. 2 is a plan view taken from the underside of the structure of Fig. 1;

Fig. 3 is a transverse sectional elevation taken on lines 3—3 of Fig. 1;

Fig. 4 is a diagrammatic wiring circuit incorporating the overload protector and circuit breaker associated therewith;

Fig. 5 is an elevation partly in section of another preferred embodiment of the invention;

Fig. 6 is a schematic wiring diagram showing the manner in which the circuit breaker of Fig. 5 may be employed; and

Fig. 7 is a load-deflection diagram showing the operating characteristics obtained by combining a leaf spring and a loop spring to obtain toggle action of the circuit breaker.

Referring to the drawings, my improved circuit breaker 10 comprises a strap or bar of soft iron or like magnetically responsive material having a U-shaped body 11, with sidewardly extending wing portions 12, 13. The body 11 receives a conductor 14 of the circuit to be controlled and is in electrical contact therewith. Electrical contact may be effected by the removal of a suitable portion of the insulation of the conductor 14, to bring the same into contact with the body 11, or through the agency of the pointed set screw 15 which penetrates the insulation and makes contact with the conductor. A non-magnetic sleeve 16 held in position by a non-magnetic cotter pin or the like confines the conductor within the passage through the body structure 11.

The structure 11, 12, 13 becomes magnetized by the magnetic flux surrounding conductor 14 during the passage of electricity therethrough, and the wings 12, 13, form the poles of said structure. Secured to the wing 12 is a pole-piece extension 17 of iron provided at its outer end with a rivet 18 which serves to pivotally secure to pole-piece extension 17 a magnetically responsive, preferably dip and medially pivoted armature 20.

A shim 21 of non-magnetic material is applied to the underside of armature 20 at one end thereof, to space the armature from the pole-piece extension 17 except at the rivet 18. Desirably, see Fig. 1, the armature 20 is eccentrically mounted, in that the end 20a thereof is longer than that portion of armature 20 in operative association with the pole-piece extension 17. The end 20a of armature 20 overlies the pole 13, in spaced relation therewith, it being understood that the illustrated spacing is greatly exaggerated.

A non-magnetic housing 22 provides an enclosure, and may be removably secured to the wings 12, 13 by screws. The housing 22, see Fig. 3, prevents rotation of armature 20 in the plane of pole-piece extension 17.

Insulatedly carried by the said housing 22 is a terminal 23 having a contact 23a. Secured to the armature 20 is a cooperating contact 24.

The armature 20 is adjusted for varying values of overload by means of suitable resilient means, such as the leaf spring 25, one end of which is secured to or adjacent the free end of the armature portion 20a, as shown, the regulation of the leaf spring being had by adjustment of the set screw 26, which is disposed over-center, i. e., to the left of the rivet 18 upon which the armature 20 is pivoted, and accordingly upon any predetermined adjustment of the set screw 26, the leaf spring 25 serves to resiliently bias the armature 20 toward engagement with the pole piece extension 17.

Cooperating with the armature 20 and its adjusting leaf spring 25 there is provided suitable means for precluding chattering by suitable resilient means, serving dually to effect snap action to the movement of the armature under the condition of effective overload in excess of the setting of the set screw 26, exemplified by the employment of the loop or U-shaped spring 27, mounted in over-center relation with respect to the center of the free end 20a of the armature 20, as by lodging one of the ends of the spring in the indicated recess formed in the inner face of the lateral wall of the insulating housing 22 and its other end lodged in a recess formed at the free end of the armature portion 20a, such second-named recess being located with respect to such first-named recess to normally bias the armature 20 in direction of rotation coincidental with the direction of rotation effected by the bias of the spring 25.

Fig. 7 is a typical load-deflection diagram showing the load-deflection characteristics of the loop spring and the leaf spring, and of the combined action of said springs. It will be noted that electric contact is made at a toggle point wherein the deflection of the spring assembly to "throw" the armature 20 occurs spontaneously without additional load application.

Fig. 4 shows schematically an electric wiring diagram. Load L may be broken by a circuit breaker 30 actuated by the device above described, illustratively a single pole type in which a shorting bar 31 is carried by a toggle mechanism 32. A solenoid 33 acts upon core 34 to draw the core and associated shaft 35 to the right when the solenoid 33 is energized, thereby opening the circuit in conductor 14. A conventional overthrow spring 36 holds circuit breaker 30 in either open or closed position and a manual reset 37 is a conventionalized means of resetting the circuit breaker.

A switch 38 is typical of any switch suitable to energize the solenoid 33 for remote control of load circuit L.

The overload protector may be disposed about the conductor 14 by removing cap 22, extension 17, sleeve 16 and cotter pin, and reassembling the same after the conductor has been passed through the body 11. To terminal 23 a conductor 39 connects with solenoid 33. A conductor 40 completes the solenoid circuit in the load circuit L. With the overload protector 10 in open circuit position, conductors 39, 40 are not in connection with the solenoid 33; closing push button 38 will energize solenoid 33 to bring the overthrow spring 36 through its dead center position to hold the switch 31 in open circuit position. The circuit breaker 30 forms no part of the present invention, and

no showing of automatic circuit restoring apparatus has been made.

In the present invention, the magnetic flux about the conductor 14 during current flow therethrough assumes a path from pole 12 to pole-piece extension 17 which is in contact therewith, and thence to armature 20. The shim between extension 17 and armature 20 introduces an air gap which restricts the flow of magnetic flux from extension 17 to armature 20 except where the armature and the pole-piece extension may be in physical contact. The path of magnetic flux, with respect to the armature 20, is therefore primarily from the pole-piece extension 17 to the end portion 20a of the armature 20, and thence to the pole 13.

Under ordinary conditions the strength of magnetic flux about the conductor 14 is insufficient to overcome the gap between the armature end 20a and the pole 13 whereupon the magnetic attraction of the pole-piece extension 17 for the armature 20, plus the bias of spring 25, maintains the armature in its Fig. 1 position, with the contacts 23, 23a in open circuit status. However, when the strength of the magnetic flux about the conductor 14 increases with an increase in the current flow through conductor 14, the magnetism will attain such a value that the attraction of the armature end 20a for the pole 13 will overcome the magnetic reluctance introduced by the air gap and the armature 20 will be rotated sharply clockwise of Fig. 1 thereby closing the circuit between the contacts 23a and 24 and energizing the solenoid coil 33 to actuate the circuit breaker 30. With the cessation of current flow in the load circuit L, there is no longer a magnetic flux surrounding the conductor 14 and the spring 25 returns the armature to the Fig. 1 position thereby breaking the auxiliary circuit to the solenoid 33.

The embodiment illustrated in Fig. 5 is typical of an application in which the solenoid coil of circuit breaker 30a must be continuously energized in order to maintain a closed circuit. In Fig. 5, the structure of the overload protective device 10 is substantially the same except that the contact 24 is placed upon the end 20a of armature 20, and contact 23a is appropriately changed in location.

The spring 25 holds the contacts in closed circuit position. Under an overload condition the armature 20 is rotated to open the circuit. The manual control switch 42 is normally closed, and with the overload protector 10 in series connection therewith, opening the contacts 23a, 24 opens the control circuit to the circuit breaker 30a, and the load circuit L is opened.

Whereas I have described my invention by reference to specific forms thereof, it will be understood that many changes and modifications may be made provided they do not depart from the scope of the claims.

I claim:

1. In an overload protector, a magnetically responsive structure comprising a substantially U-shaped bar of soft iron adapted to embrace a conductor of an electric circuit, said bar having a pair of co-planar extensions which respectively assume the characteristics of opposite magnetic poles when said structure is exposed to magnetic flux surrounding said conductor during passage of current therethrough, a magnetically responsive element fixedly secured to one of said extensions and extending in the direction toward but normally spaced from the other extension, a magnetically responsive armature pivotally sup-

ported upon said magnetically responsive extension for rotation toward the other of said extensions and having an end overlying said other extension in spaced relationship therewith, resilient means normally biasing said armature away from said other extention, an electric contact on said armature, a second electric contact operatively associated with said first-named electric contact, and means dually precluding chattering of said magnetically responsive armature under the condition of flow of electric current through said conductor of a value less than overload and cooperating with said resilient means under the condition of overload of such electric current to accelerate said magnetically responsive armature to connect said contacts with one another.

2. In an overload protector, a substantially U-shaped bar of soft iron or like magnetically responsive material adapted to embrace a conductor of an electric circuit, the opposing ends of said bar being turned outwardly in the same plane to serve as magnetic poles when the bar is exposed to magnetic flux surrounding the conductor during passage of current therethrough, one of said ends having an extension directed toward but spaced from the opposite pole; a magnetically responsive armature pivotally mounted upon said extension and having one end overlying said extension in spaced relationship therewith, the center portion of said extension being in magnetic relation with one of the poles and having its opposite end overlying the opposite

pole in spaced relationship therewith; means for resiliently maintaining the said spaced relationship; electric contact means controlled by said armature; a second contact means cooperating with said first contact means; and means dually precluding chattering of said armature under the condition of flow of electric current through said conductor of a value less than overload and cooperating with said resilient means under the condition of overload of such electric current to accelerate said magnetically responsive armature to connect said contacts with one another.

WILLIAM E. STILWELL, JR.

REFERENCES CITED

The following references are of record in the file of this patent:

UNITED STATES PATENTS

Number	Name	Date
728,752	Naphtaly et al.	May 19, 1903
850,205	Bergman	Apr. 16, 1907
890,697	Noeggerath	June 16, 1908
1,220,813	Barrow	Mar. 27, 1917
1,930,528	Marthens	Oct. 17, 1933
1,934,264	Hefner	Nov. 7, 1933
1,983,026	Greenleaf	Dec. 4, 1934
2,075,499	Buch et al.	Mar. 30, 1937

FOREIGN PATENTS

Number	Country	Date
401,393	Germany	Sept. 4, 1924