US00D988024S

(12) **United States Design Patent**
Hatcher

(10) **Patent No.: US D988,024 S**
(45) **Date of Patent: ** Jun. 6, 2023**

(54) **STORAGE CASE**

(71) Applicant: **Winston Products LLC**, Cleveland, OH (US)

(72) Inventor: **Troy Hatcher**, Bay Village, OH (US)

(73) Assignee: **Winston Products LLC**, Cleveland, OH (US)

(**) Term: **15 Years**

(21) Appl. No.: **29/700,129**

(22) Filed: **Jul. 31, 2019**

(51) **LOC (14) Cl.** **06-06**

(52) **U.S. Cl.**
USPC **D6/512**

(58) **Field of Classification Search**
USPC D6/512, 524, 528-531, 534, 661, 671, D6/671.1, 657, 683.1, 675, 675.4, 678; D21/325; D24/177; 211/13.1, 60.1, 65, 66
CPC A01K 63/003; A01G 9/14; B65D 85/52; A47F 3/043; A47B 17/04; A47B 88/22; A47B 67/00; A47B 67/02; A47B 47/03
See application file for complete search history.

(56) **References Cited**

U.S. PATENT DOCUMENTS

D451,309 S * 12/2001 Riga et al. D6/672
D619,721 S * 7/2010 Hirayoshi D24/177
D620,277 S * 7/2010 Wyatt D6/657
D656,551 S * 3/2012 Williamson et al. D21/325
D723,844 S * 3/2015 Hawkins D6/678
D744,773 S * 12/2015 Yoon D6/678
D797,477 S * 9/2017 Horsky et al. D6/675.4
D862,885 S * 10/2019 Breeden, III et al. D3/318
D864,625 S * 10/2019 Rockwell et al. D6/675
D904,785 S * 12/2020 Hatcher D6/512

* cited by examiner

Primary Examiner — Nathan M Johnston
(74) *Attorney, Agent, or Firm* — Tucker Ellis LLP

(57) **CLAIM**

The ornamental design for a STORAGE CASE as shown and described.

DESCRIPTION

FIG. **1** is a perspective view of a STORAGE CASE showing my new design;
FIG. **2** is a front view thereof;
FIG. **3** is a rear view thereof;
FIG. **4** is a top view thereof;
FIG. **5** is a bottom view thereof;
FIG. **6** is a left side view thereof; and
FIG. **7** is a right side view thereof.
The broken lines show portions of the design that form no part of the claimed design.

1 Claim, 5 Drawing Sheets

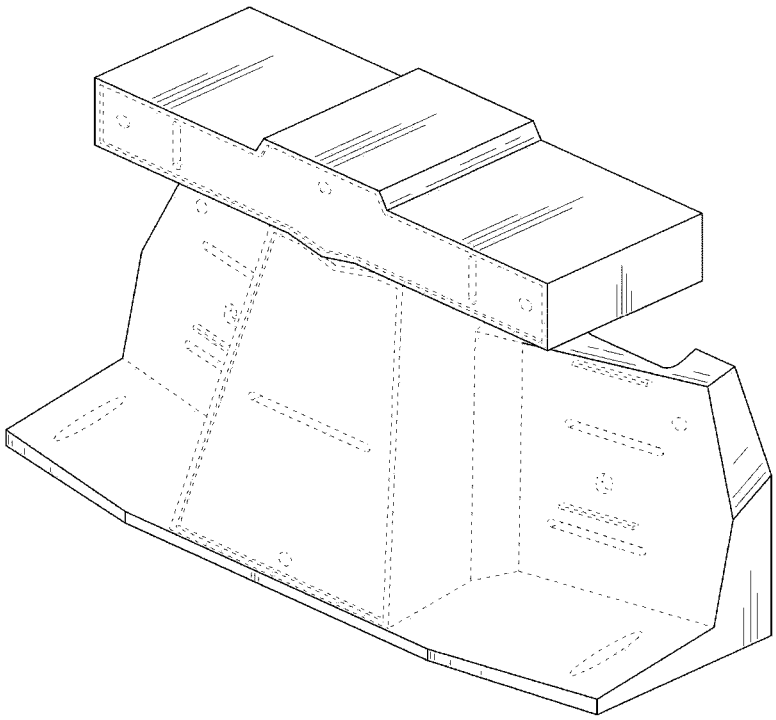

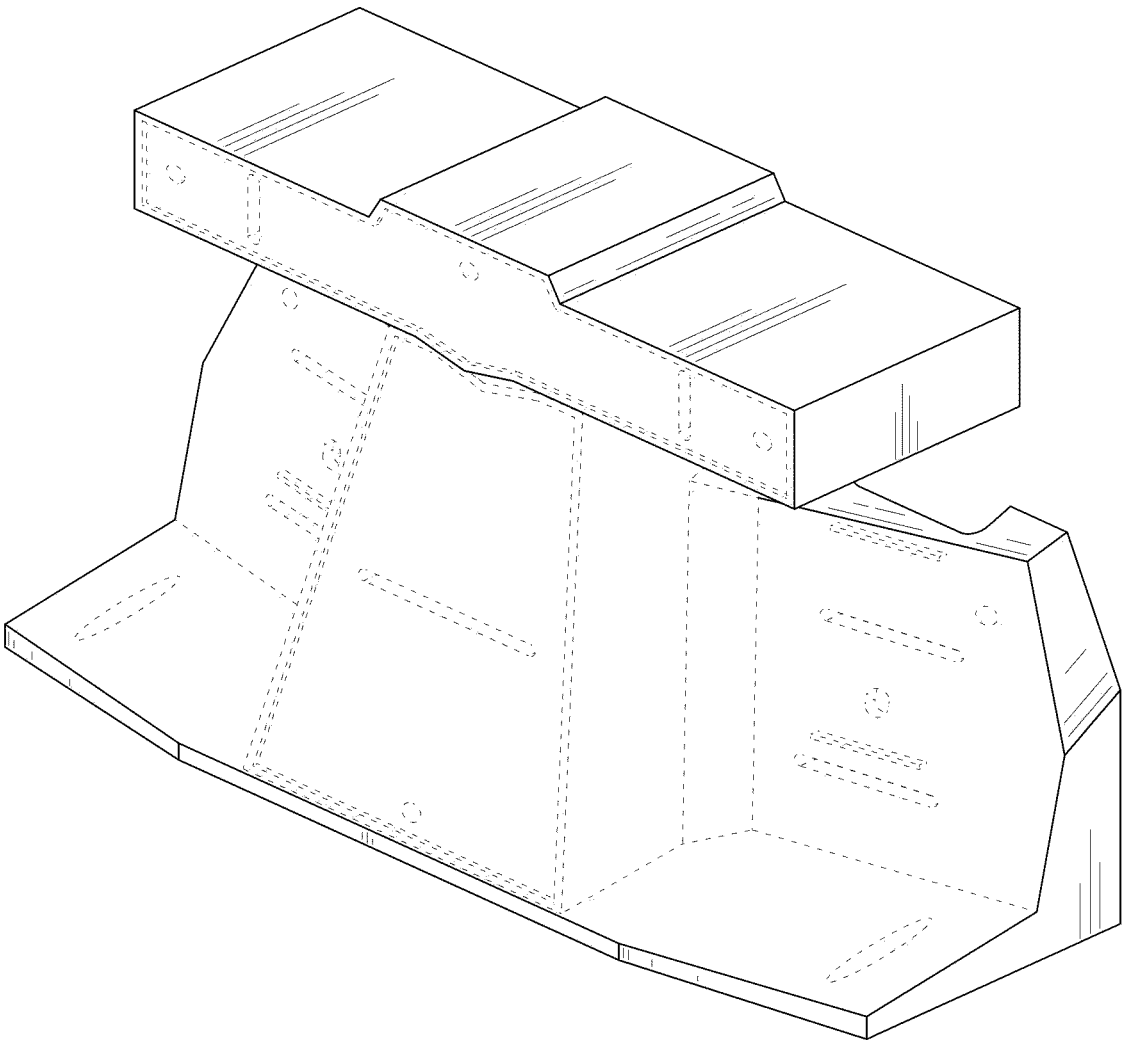

FIG. 1

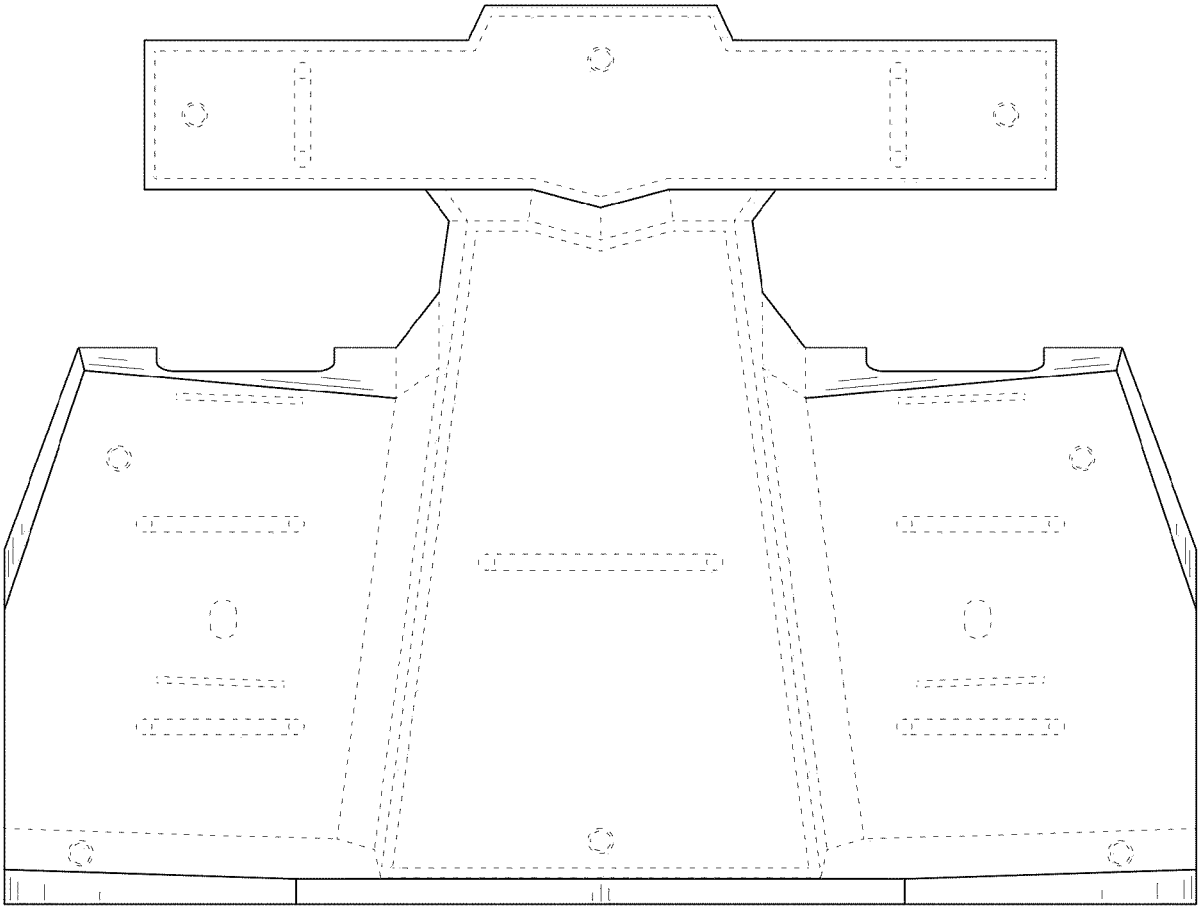

FIG. 2

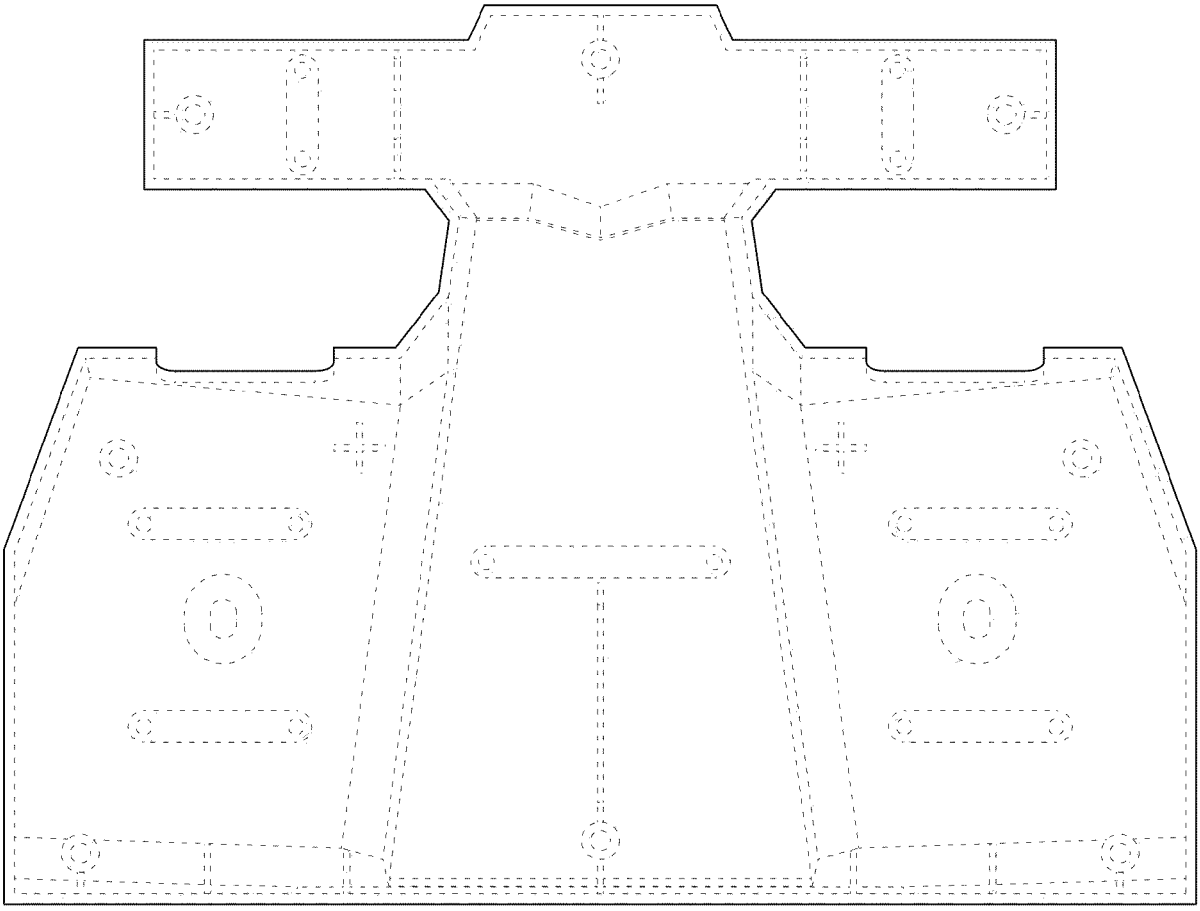

FIG. 3

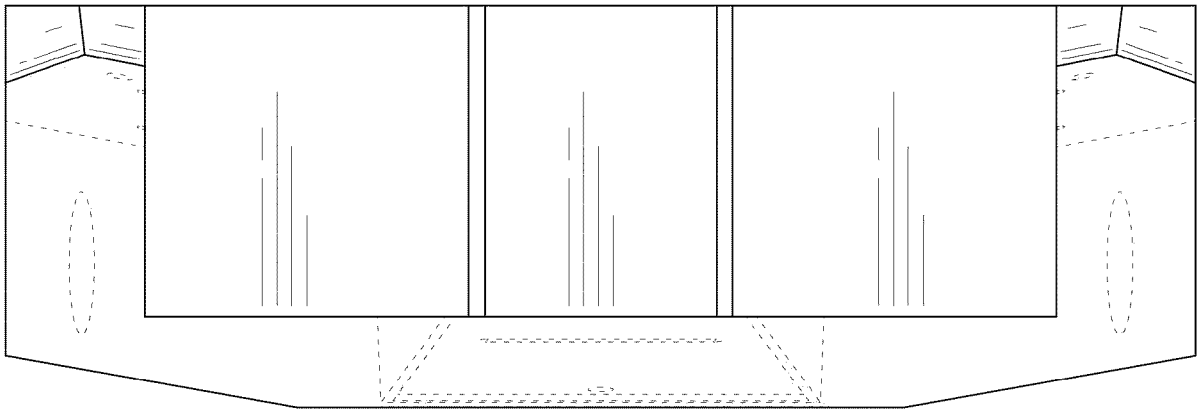

FIG. 4

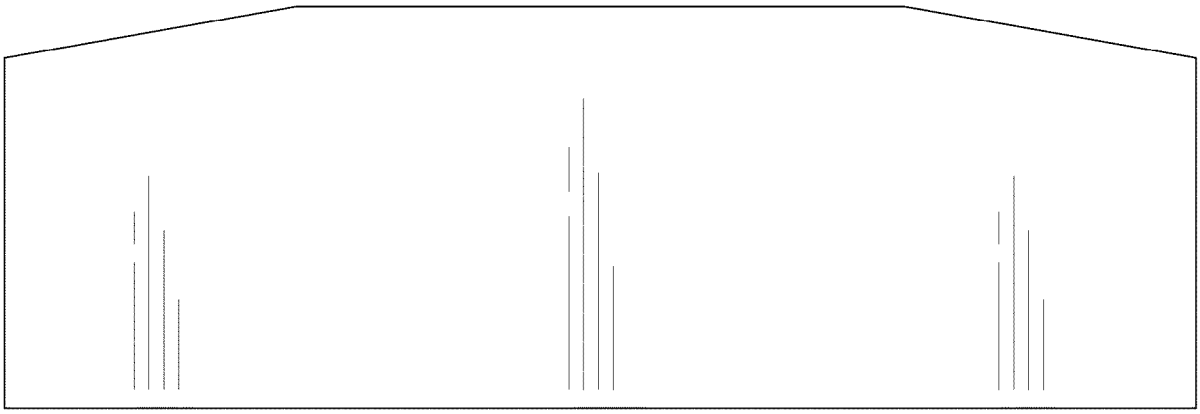

FIG. 5

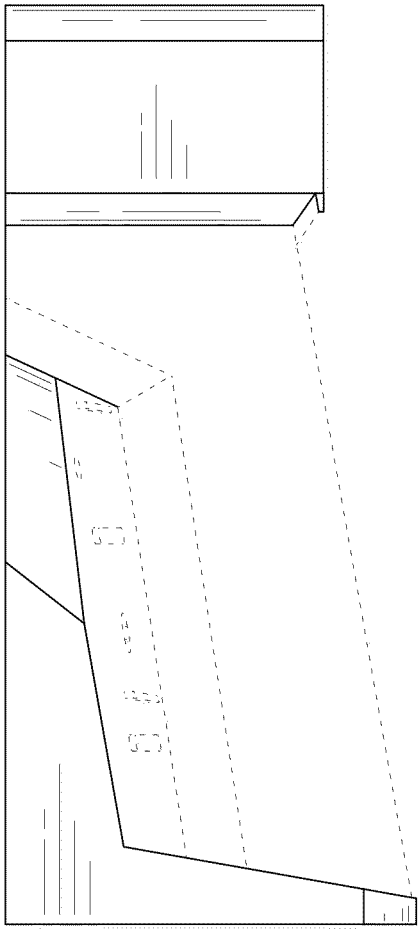

FIG. 6

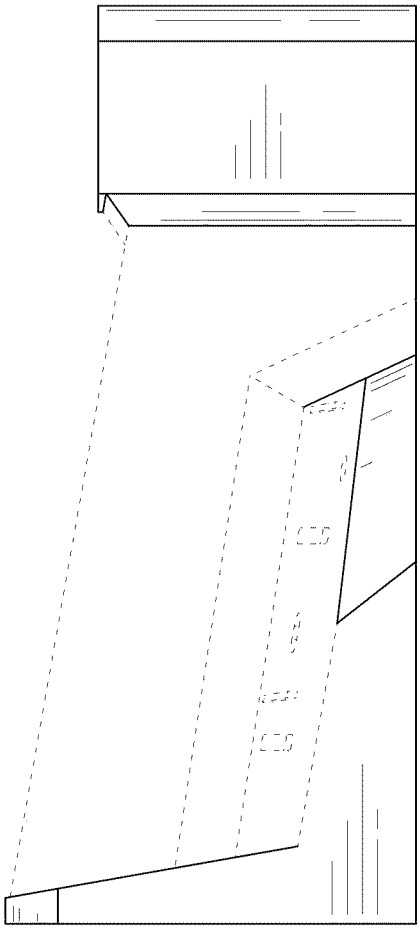

FIG. 7