TOXIC CHEMICALS MASK

Filed July 17, 1958 2 Sheets-Sheet 1

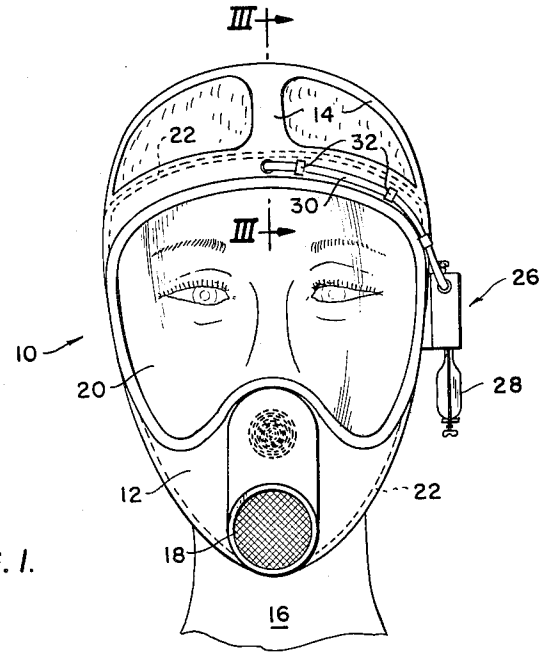

FIG. 1.

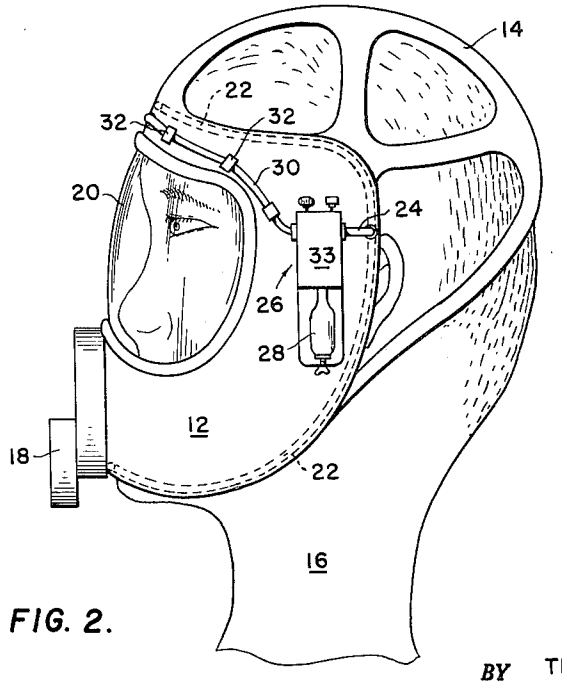

FIG. 2.

INVENTORS
VINCENT F. SAITTA
THOMAS. W. McCONVILLE
BY
B. L. Zangerle
ATTORNEYS.

TOXIC CHEMICALS MASK

Filed July 17, 1958 2 Sheets-Sheet 2

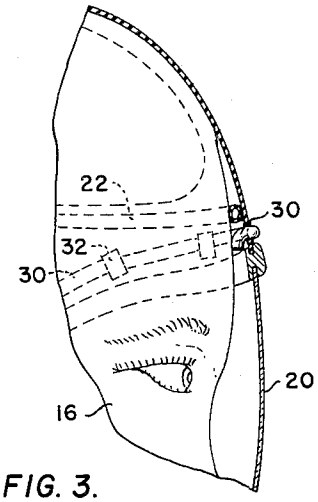

FIG. 3.

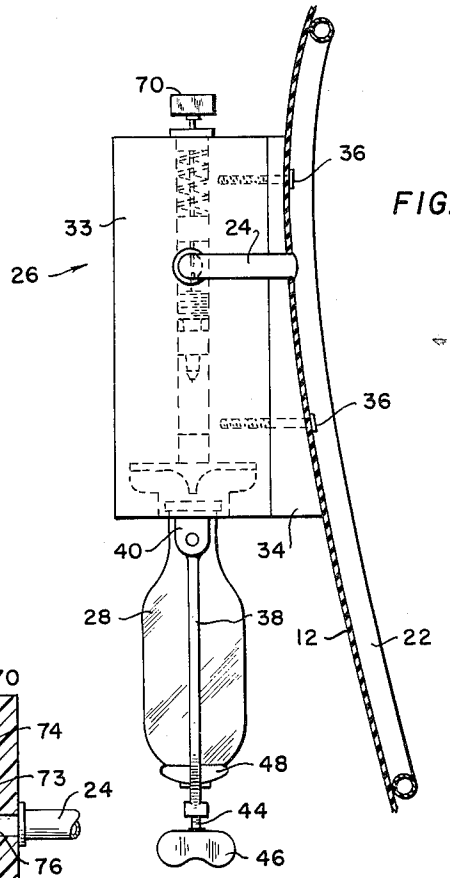

FIG. 4.

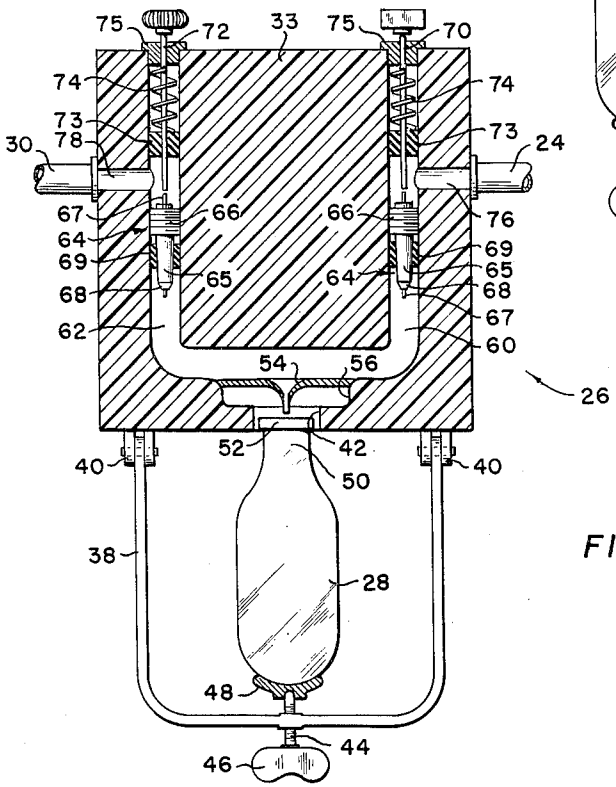

FIG. 5.

INVENTORS
VINCENT F. SAITTA
THOMAS W. McCONVILLE
BY
B. L. Zaugwill
ATTORNEYS.

United States Patent Office

3,018,776

Patented Jan. 30, 1962

1

3,018,776
TOXIC CHEMICALS MASK

Vincent F. Saitta, 53 Elmira St. SW., Washington, D.C., and Thomas W. McConville, 3114 St. Luke Lane, Baltimore, Md.

Filed July 17, 1958, Ser. No. 749,308
3 Claims. (Cl. 128—141)
(Granted under Title 35, U.S. Code (1952), sec. 266)

The invention described herein may be manufactured ad used by or for the Government of the United States of America for governmental purposes without the payment of any royalties thereon or therefor.

This invention relates to improvements in toxic chemical masks and more particularly to a chemical mask having a positive, reliable sealing means against a wearer's face and a means for removing poisonous gases which may be trapped between the mask and the wearer's face.

The sealing means comprises an inflatable tube attached to the edge or periphery of a toxic gas mask which is adjustably inflated by a compressed air cartridge and cooperating valve.

Another valve and supply tube are connected to the compressed air supply which will inject a blast of air inside the mask if the mask wearer desires to flush the mask of poisonous gases.

It has been determined that the pneumatic peripheral seal incorporated in the design of certain protective face masks will eventually fail of its purpose due to the dissipation of built-in air by long storage and aging of the rubber. Masks provided with this type of sealing device have been found with the device practically devoid of air. This condition presents a definite hazard to the user, in that the deflated tube tends to wrinkle and/or fold against the face when placed in the operating position. Such uneven surfaces defeat the purpose of the mask as they permit the passage of contaminated atmosphere into the mask. This is particularly true as the individual's air demand increases with exertion, and the increased energy required to obtain sufficient air through a restrictive device, such as is the air filtering canister of the present types. These two factors, coupled with certain psychological factors, increase the breathing rate and inhalation pressure and require that a positive seal on every portion of the face, regardless of shape or physical state (pimples, beard, scars), be provided.

Masking procedure requires (1) the individual to refrain from breathing during the period of time between the sounding of the gas attack alarm and the affixing of the mask to the face, (2) to exhale sharply to clear the mask of any contaminated atmosphere picked up during masking procedure, and (3) to inhale steadily, holding the exhaust valve closed, until the mask collapses on the face to test mask security. Special caution is made that the individual should not attempt to take a last second inhalation of air before carrying out the specified masking procedure. Breathing is performed in a two phase cycle, inhalation and exhalation. When an individual is confronted with a situation wherein he finds himself near or at the exhalation phase of the breathing cycle at the time the gas alarm is made and understood, the overwhelming reaction, either by trained or untrained personnel is to quickly inhale. Even trained personnel will admit that a "sneak" inhalation will be made or attempted during masking procedure, if they are caught on or about the exhaust cycle area.

Breaking the breathing cycle area into four segments, i.e.; (1) lung exhausting from full to half full; (2) lung exhausting from half full to minimum air content; (3) lung replenishment from minimum air content to half inflated, and (4) lung replenishment from half inflation to maximum air content, it can be reasonably assumed that approximately 50% of all personnel will find themselves in the minimal one-half of the breathing cycle, wherein their lungs contain less air than normal demand. Approximately 50% of these individuals will find themselves at the minimum, or nearly minimum lung air content phase of the breathing cycle. This group of personnel, consisting of approximately 25% of personnel receiving the toxic chemical attack, will have to take action until protection is afforded. Physical and psychological factors will particularly influence this group of individuals to such a degree that, despite training, some effort, although furtive, will be made to inhale, an action which, if taken in atmosphere containing the latest types of chemical agents, could prove fatal.

2

This group will possess an insufficient amount of air in their lungs to effectively clear contaminated atmosphere from the mask face piece by sharply exhaling. Although some contamination would be removed, it is quite possible that a sufficient amount will remain and be drawn directly into the lungs, or enter the blood stream through the eye portals, to cause a casualty and probably a fatality.

It is therefore a primary object of this invention to disclose a positive pneumatic seal for a gas mask which will be effective despite aging and loss of air of the seal and despite facial differences or uneven facial surfaces of a wearer's face.

Another object of this invention is to disclose an air flushing device which will remove trapped poisonous gases from between a gas mask and the face of the wearer.

Another object of this invention is to disclose a simple and efficient compressed air supply and valve system for seal inflation and air flushing of a gas mask.

Other objects and advantages of the invention will hereinafter become more fully apparent from the following description of the annexed drawings, which illustrate a preferred embodiment, and wherein:

FIG. 1 is a front view of the gas mask mounted on a person;

FIG. 2 is a side view of the gas mask showing some detail of the compressed air supply and valve system;

FIG. 3 is a cross-section of the device taken along line III—III of FIG. 1;

FIG. 4 is a view, partly in cross-section, of the compressed air supply and valve structure showing the seating pad; and

FIG. 5 is a detail view, partly in cross-section showing the compressed air supply and valve system.

Referring now to the drawings, wherein like reference characters designate like or corresponding parts throughout the several views, there is shown in FIG. 1 (which illustrates a preferred embodiment) a toxic gas mask indicated at **10** comprising a face piece **12** and a plurality of straps **14**, which may be elastic, for removably securing the mask **10** to the face of a person **16**.

The face piece **12** also includes a chemical filter **18** or air filtering canister (which may have a plurality of stages) attached at the lower front portion of the face piece **12** adjacent the mouth of the person **16** wearing the mask and a lens **20** for a vision port. The face-piece **12** is preferably made of rubber or a material impervious to gas or chemical attack and the lens **20**, filter **18**, and connections therebetween should also be impervious.

A peripheral seal **22** made of rubber tubing is vulcanized or fastened to the inner edge of the face-piece **12** (also see FIG. 4) and, as is more clearly shown in FIG. 2, extends around the face of the person to provide an air tight seal. An inflating line **24** leads from seal **22** to a valve system **26** attached to the face piece **12** by way of exhaust port **76**. A compressed gas supply **28** is supported by valve system **26**.

A flushing tube **30** leads from the other side of the valve system **26** by exhaust port **78** to the top of the face piece **12** just below the peripheral seal **22** and extends downwardly inside the mask **10** (see FIG. 3). The tube **30** may be vulcanized to the face-piece **12** or attached by clips **32** as shown in FIG. 2.

In the event of a toxic chemical attack the most effective procedure is for a person to hold his breath, place the mask over his face and secure it by placing the straps over his head, and quickly clear the mask by flushing with compressed air, thereby allowing any poisonous gas to escape through the filter **18** and around the edges of the mask.

If the peripheral seal is not inflated to its proper pressure, it will be apparent to the user of the mask and the valve system may be operated either before or after the flushing operation to achieve a satisfactory seal.

The valve system **26** is shown in more detail in FIGS. 4 and 5 and, referring to FIG. 4, comprises a metal or plastic block **33**, which may be shaped to fit the side of the face-piece **12** or have a pad **34** suitably formed for a fit. A pair of screws **36** having flat, rubber covered heads are shown for attaching the valve system **26** to the face-piece **12**.

A U-shaped yoke **38** is attached to the bottom of the block **33** by means of hinges **40**. The hinges **40** allow the yoke **38** to swing and provide room for the compressed air supply **28** to be inserted into the intake port **42**. A bolt **44** having a lower "butterfly" end **46** for turning by hand is threadedly engaged with the yoke **38** and has a flared end **48** which forces the supply **28** into the intake port **42**.

The supply **28** may be similar to the type presently used for life-jackets comprising a cylindrical steel cylinder having a small neck **50** covered by a soft metallic cap **52**.

Referring further to FIG. 5, a hollow conical needle **54** is mounted with its sharp end extending into the intake port **42** and having its larger end flared and attached to the enlarged section **56** of intake port **42**. In operation the bolt **44** forces the steel cylinder and cap **52** against the needle **54** which punches a hole in the cap **52** and allows the compressed air to escape up the channels **60** and **62** leading to the seal **22** and flushing tube **30** by means of exhaust ports **76** and **78**.

A pair of valves **64** are mounted in the channels **60** and **62** to selectively admit compressed air to the inflating line **24** for the seal **22** and to the air flushing tube **30**.

These valves may be of the pneumatic tire type having a cylindrical housing **65** attached to the block **33** by means of a threaded section **66**. A spring loaded, valve stem **67** extends downwardly through the housing **65** and operates a valve seat **68**. A packing **69** is placed around the housing **65** to keep the peripheral seal **22** inflated and to prevent the compressed air from leaking into the flushing tube **30**.

A pair of plungers **70** and **72** having a square and a round knob respectively are biased by springs **74** to move the valve stems **67** and allow the valves **64** to be operated as the need arises. Since the valve plungers **70** and **72** are out of sight by the operator and for convenience when operating in darkness, it is desirable to have different configurations of the knobs to avoid confusion between them. A pair of packings **73** are mounted in sealing and sliding contact with the plungers **70** and **72** and attached to the upper extension of channels **60** and **62** to seal the upper ends thereof and to provide a support for the springs **74**. A pair of plugs **75** are attached to the block **33** at the end of the channels **60** and **62** to provide a sliding support for the plungers **70** and **72**.

There are certain military chemicals which will quickly produce death or incapacitation in minute quantities or low concentrations, in the atmosphere. Such quantities or concentrations must be removed from the protective mask before the user can resume his normal breathing of the atmosphere which must be filtered, or cleansed, by passing through the canister of the mask. The subject invention will remove the contaminated atmosphere that could be present in the protective mask face piece.

The diameter of the channels **60** and **62** and flushing tube **30** should be such that the mask will be rapidly cleared of toxic gas but not so large as to blast the mask off of the person's face.

In brief, the combined mask, seal, air flushing tube, valve system, and compressed air supply cooperate to provide a simple and inexpensive portable mask which will give complete protection to a user during the critical donning time of the mask and provide a positive and safe seal during the useful life of the mask.

It should be understood, of course, that the foregoing disclosure relates to only a preferred embodiment of the invention and that it is intended to cover all changes and modifications of the example of the invention herein chosen for the purposes of the disclosure, which do not constitute departures from the spirit and scope of the invention.

What is claimed is:

1. A toxic chemicals mask comprising a face-piece adapted to be placed on the face of a person subject to chemical attack, a pneumatic seal attached to the inner periphery of said face-piece for providing an air tight seal between said mask and said face, an air flushing tube attached to said mask and having one end extending inside said face-piece for flushing said face-piece of poisonous gas, a valve system attached to said face-piece and connected to said seal and said air flushing tube for selective operation thereof, said valve system further comprising an inlet port having a conical needle mounted therein and channel connections between said port and said seal flushing tube, a compressed gas supply comprising a cylinder having a small neck with a soft metallic cap to seal said cylinder inserted in said inlet port, a U-shaped yoke attached to said valve system by a pair of hinges at the open end of said yoke, an adjustable bolt mounted on the central part of said yoke forcing said cylinder into said inlet port and against said needle, a first valve in a first of said channel connections between said port and said seal operated by a spring loaded plunger having a square knob for adjustably inflating said seal, and a second valve in a second of said channel connections between said port and said flushing tube operated by a spring loaded plunger having a round knob for selectively flushing said face-piece with compressed gas from said supply.

2. A toxic chemicals mask comprising a face-piece adapted to be placed on the face of a person subject to chemical attack, strap means attached to said face-piece for removably securing said mask to the person's head, an air filter for removing poisonous gas from the atmosphere attached to said face-piece, a lens to provide a vision port attached to said mask, a pneumatic seal attached to the inner periphery of said face-piece for providing an air tight seal between said mask and said face, an air flushing tube attached to said mask and having one end extending inside said face-piece for flushing said face-piece of poisonous gas, a valve system attached to said face-piece and connected to said seal and said air flushing tube for selective operation thereof, said valve system further comprising an inlet port having a conical needle mounted therein and channel connections between said port and said seal and said flushing tube, a compressed gas supply comprising a cylinder having a small neck with a soft metallic cap to seal said cylinder inserted in said inlet port, a U-shaped yoke attached to said valve system by a pair of hinges at the open end of said yoke, an adjustable bolt mounted on the central part of said yoke forcing said cylinder into said inlet port and against said needle, a first valve in a first of said channel connections between said port and said seal operated by a spring loaded plunger having a square knob for adjustably inflating said seal, and a second valve in a second of said channel connections between said port and

said flushing tube operated by a spring loaded plunger having a round knob for selectively flushing said facepiece with compressed gas from said supply.

3. A valve system for a toxic mask comprising a valve block adapted to be attached to a toxic mask, an inlet port in said block having a hollow, conical needle mounted therein, a first channel connected to said inlet port and to a first exhaust port having a first valve operated by a spring loaded plunger having a square knob, a second channel connected to said inlet port and to a second exhaust port having a valve operated by a spring loaded plunger having a round knob, a U-shaped yoke attached to said block near said inlet port at the open end of said yoke by a pair of hinges, a compressed gas supply comprising a steel cylinder engaging said bolt and inlet port and having a small neck at one end having a soft metallic seal, and a bolt threadedly mounted on the lower part of said yoke forcing said compressed gas supply cylinder into said inlet port for puncturing by said needle whereby said gas supply may be opened and the gas channeled to said valves.

References Cited in the file of this patent

UNITED STATES PATENTS

1,105,127	Drager	July 28, 1914
1,878,464	Bulmer	Sept. 20, 1932
1,917,961	Fee	July 11, 1933

FOREIGN PATENTS

749,920	France	May 15, 1933
494,173	Great Britain	Oct. 21, 1938